FERODO®
RACING

2020/21

CAR RACING BRAKE PAD







CATFE701

/ www.ferodoracing.com



COMPOUND SELECTION GUIDE

MATERIAL CHARACTERISTICS

Relative Performance Characteristics of Ferodo Racing Range Under Heavy-Duty Conditions

	Pad Life	Disc Life	Average mu	Fade	Pedal Travel	Release
DS2500	○	●	○	○	●	●
DS3000	○	●	●	●	○	●
FER4003	○	●	●	○	●	●
DS1.11	●	●	●	●	●	●
DSUNO	●	●	●	●	●	●

○ Moderate ● Good ● Excellent

SUGGESTED APPLICATIONS

		TYPE OF APPLICATION					
	MATERIAL	ROAD (R90 approved)	TRACK DAY	RALLY	CIRCUIT SPRINT	CIRCUIT HEAVY DUTY/ENDURANCE	FORMULA
ROAD	DS PERFORMANCE	F/R					
RACING	DS2500		F/R	R	R		F/R
	DS3000			F/R	F		F/R
	FER4003			R	R		F/R
	DS1.11				F/R	F/R	F/R
	DSUNO			F	F	F/R	F/R

F = Front R = Rear

FERODO® RACING

www.ferodoracing.com

Ferodo® is a registered trademark of Federal-Mogul LLC or one or more of its subsidiaries in one or more countries.

FEDERAL-MOGUL MOTORPARTS

FERODO®

RACING



TECHNICAL INFORMATION	II

PADS

PRODUCT RANGE	16
APPLICATIONS	1000
PADS FOR RACING CALIPERS	2000
PAD DRAWINGS	3000
BRAKE PADS XREF (COMPETITORS TO FERODO)	4000

Features & Benefits

ISO/TS 16949 & ISO 14001 Certified Production

All **Ferodo** Racing brake pads are manufactured to the highest international ISO quality standards at Federal Mogul's dedicated manufacturing facility in Italy.
Every brake pad has a total of 26 separate quality controls during its manufacture which guarantees a repeatable and consistent product within and between every batch.

Precision Engineering

All of the pad back-plates are manufactured from high tensile steel meaning minimum distortion when subjected to the high clamping forces common in motorsport use.
Pads are manufactured to maintain high tolerances on the pad and back-plate dimensions including : flatness , parallelism and overall thickness.
This results in a rapid and uniform transmission of pressure from the brake system to the pads.

Thermal Under-layer

Unlike many competitive products most **Ferodo** Racing brake pads incorporate a thermal under-layer between the backing-plate and the friction material.
This reduces the brake caliper's operating temperature by up to 80 deg C and significantly reduces the risk of boiling the brake fluid which causes a "spongy" feeling in the pedal.

Disc Friendly

Unlike many competitive products **Ferodo** pads are kind on brake discs.
Ferodo pads are developed to optimize both the pad and disc life. Our philosophy is not to increase pad life with the casualty of excessive disc wear.

High Controllability

All **Ferodo** Racing brake pads are engineered to perform with a relatively constant coefficient of friction (mu) across a wide range of temperatures , pressures and vehicle speeds.
This results in a consistent brake feel for the driver meaning that the braking torque is a linear response to pedal pressure.

Wide Range of Material choices and Fitments

Ferodo Racing has one of the widest range of pad shapes in the racing/performance brake pad market.
This fitment range is available with the necessary compound choice meaning that there is nearly always a solution to your needs.

Compounds & Suffixes

EN INTRODUCTION

This catalogue details the Ferodo range of racing brake pads. Designed for ease of use by both Distributors and Racing Teams, the catalogue contains application/compound data and product shape illustrations.

PART NUMBER SUFFIXES

All part numbers in the range section of this catalogue feature a suffix. This suffix identifies the material compound available for each part number

H	DS2500
C	4003
R	DS3000
W/WB	DS1.11
Z/ZB	DSUNO

Many part numbers are available in more than one material and are therefore listed accordingly with different suffixes. For example:
(FRP3001H = DS2500, FRP3001C = 4003,
FRP3001R = DS3000, FRP3001W=DS1.11, FRP3001Z=DSUNO)

COMPOUND SELECTION

As a general guide we recommend that you consider the following when making your material compound selection:
4WD cars = same compound front and rear
Rear traction cars = same compound front and rear.
Front traction cars = high friction level in the front axle (i.e. DS3000), lower friction level on the rear axle (i.e. DS2500, 4003).
For further advice please contact Ferodo Racing.

I INTRODUZIONE

Il catalogo Ferodo Racing è uno strumento di lavoro che permette alla rete di distribuzione Ferodo ed ai Teams di scegliere correttamente la figura della pastiglia e la mescola per ottenere la miglior efficienza dell'impianto frenante.

SIGNIFICATO DEI SUFFISSI

Il suffisso viene utilizzato per identificare la mescola:

H	DS2500
C	4003
R	DS3000
W/WB	DS1.11
Z/ZB	DSUNO

Pertanto, lo stesso numero di codice (es. FRP3001) potrá essere accompagnato da differenti suffissi che indicheranno la mescola richiesta
(FRP3001H =DS2500, FRP3001C = 4003,
FRP3001R = DS3000,FRP3001W=DS1.11,
FRP3001Z=DSUNO).

SCELTA DELLA MESCOLA

Una regola che potete utilizzare con le mescole Ferodo Racing:
Vetture a 4 ruote motrici = stessa mescola per anteriore e posteriore.
Vetture a trazione posteriore = stessa mescola per anteriore e posteriore.
Vetture a trazione anteriore = mescola ad alto coefficiente d'attrito sull'anteriore (es. DS3000) ed a minor coefficiente d'attrito per il posteriore (es.DS2500 o 4003).
Per ulteriori informazioni contattare la Ferodo ai numeri riportati su questo catalogo.

F INTRODUCTION

Le catalogue Ferodo Racing est un outil convivial qui permet aux réseaux de distribution et aux écuries de course de choisir la bonne plaquette et la qualité la meilleure pour gagner les courses.

SUFFIXES

Chez Ferodo, nous utilisons des suffixes pour identifie les matériaux :

H	DS2500
C	4003
R	DS3000
W/WB	DS1.11
Z/ZB	DSUNO

Pour cette raison, vous pouvez trouver la même référence (par ex: FRP3001) qui identifie la forme de la plaquette avec suffixes différents qui déterminent les qualités
(FRP3001H = DS2500, FRP3001C = 4003,
FRP3001R = DS3000, FRP3001W=DS1.11, FRP3001Z=DSUNO)

CHOIX DES MATERIAUX

Quelques conseils pour le choix des matériaux en fonction de la motricité des véhicules:
Pour les 4 roues motrices = même qualité à l'avant et l'arrière.
Pour les propulsions = même qualité à l'avant et l'arrière.
Pour les tractions = haut niveau de friction à l'avant (exemple DS3000) et plus faible niveau de friction à l'arrière (exemple DS2500, 4003).

E INTRODUCCION

El catálogo Ferodo Racing es una herramienta de fácil utilización, que permite a los distribuidores y a los equipos de competición, seleccionar la aplicación correcta de la pastilla de freno y el compuesto adecuado, para la obtención del redimiento más elevado y así poder alcanzar los mejores resultados deportivos.

SUFIJOS

Los diferentes compuestos de los materiales Ferodo Racing, se identifican con los siguientes sufijos:

H	DS2500
C	4003
R	DS3000
W/WB	DS1.11
Z/ZB	DSUNO

Por esta razón, se puede encontrar el mismo número de refencia de pastilla (por ejemplo: FRP3001) que identifica la forma de está, con distintos sufijos para determinar los diferentes compuestos Ferodo Racing
(FRP3001H = DS2500, FRP3001C = 4003,
FRP3001R = DS3000, FRP3001W=DS1.11, FRP3001Z=DSUNO)

ESCOGER EL COMPUESTO

Criterios de selección para la utilización de los diferentes compuestos:
Vehículos con cuatro ruedas motrices (4WD) = mismo compuesto delante y detrás.
Vehículos con tracción trasera = mismo compuesto delante y detrás.
Vehículos con tracción delantera = alto coeficiente de fricción en el eje delantero (por ejemplo, DS3000), bajo coeficiente de fricción en el eje trasero (por ejemplo, 4003).

Compounds & Suffixes

D EINFÜHRUNG

Der Ferodo Racing Katalog ist ein anwenderfreundliches Werkzeug, daß den Händlern und den Rennteams erlaubt, den richtigen Belag in der richtigen Qualität zu wählen, um Rennen zu gewinnen.

SUFFIX

Ferodo benutzt eine Kurzbezeichnung (Suffix) die Qualität für:

H	DS2500
C	4003
R	DS3000
W/WB	DS1.11
Z/ZB	DSUNO

Aus diesem Grund finden Sie die Teile-Nr. (z.B. FRP3001) die die Belagabmessung bestimmt mit verschiedenen Kurzbezeich- nungen für die jeweilige Ferodo Racing Qualität.
(FRP3001H = DS2500, FRP3001C = 4003,
FRP3001R = DS3000, FRP3001W=DS1.11, FRP3001Z=DSUNO)

QUALITÄTEN AUSWAHL

Kurzempfehlung für die richtige Auswahl der Qualität:
Allradfahrzeuge = gleiche Qualität vorn + hinten.
Hinterradangetriebene Fahrzeuge = gleiche Qualität vorn + hinten.
Vorderradangetriebene Fahrzeuge = Hoher Reibwert für die Vorderachse (z.B. DS3000).
Niedrigerer Reibwert für die Hinterachse (z.B. DS2500,4003).

日本語 ご紹介

レーシングチーム様、代理店様のともに使用しやすいようこのカタログはフェロードのレーシングブレーキパッドの詳細（使用目的、材質データー、形状図）をご案内しております。

パーツ番号

品番の最後にアルファベットがつけてあります。下記の通り材質ごとに異なります。

H	DS2500
C	4003
R	DS3000
W/WB	DS1.11
Z/ZB	DSUNO

ひとつの品番でも複数の材質がご用意してあるものがあります。
(FRP3001H =DS2500, FRP3001C = 4003,
FRP3001R = DS3000,FRP3001W=DS1.11,
FRP3001Z=DSUNO).

コンパウンドの選択

一般的なコンパウンド選択のガイダンスをご案内いたします。
4WD 車輌 = 前後同じ材質
FR 車輌 = 前後同じ材質
FF 車輌 = フロントにμの高い材質 (例 DS3000), リアに低いμの材質 (例 DS2500,4003).
ご質問がありましたらフェロードレーシングまたは代理店にお問い合わせ下さい。.

中文 簡介

本目錄記載了 Ferodo 賽車及高性能煞車片資料。方便業界及參賽人仕使用。本目錄亦提供了以下資料:-
1. 車輛型號對應表
2. 煞車片物料選擇
3. 煞車片圖樣及呎吋。

煞車片物料的代號(尾碼)

所有煞車片型號都包否一個尾碼，這代表不同的物料!

H	DS2500
C	4003
R	DS3000
W/WB	DS1.11
Z/ZB	DSUNO

很多型號煞車片都會生產多於一種物料
所以需要依靠尾碼來區分。
(FRP3001H = DS2500, FRP3001C = 4003,
FRP3001R = DS3000, FRP3001W=DS1.11, FRP3001Z=DSUNO)

煞車片物料的選擇

一般情況下，我們會提供以下建議:-
4WD (四驅車)=頭皮及尾皮(選用相同物料)
尾驅車=頭皮及尾皮(選用相同物料)
頭驅車=頭皮要比尾皮性能較高(例如頭用DS3000,尾用DS2500)
如需要更多資料，請向 Ferodo Racing 查詢。

Ferodo Racing Compounds

EN

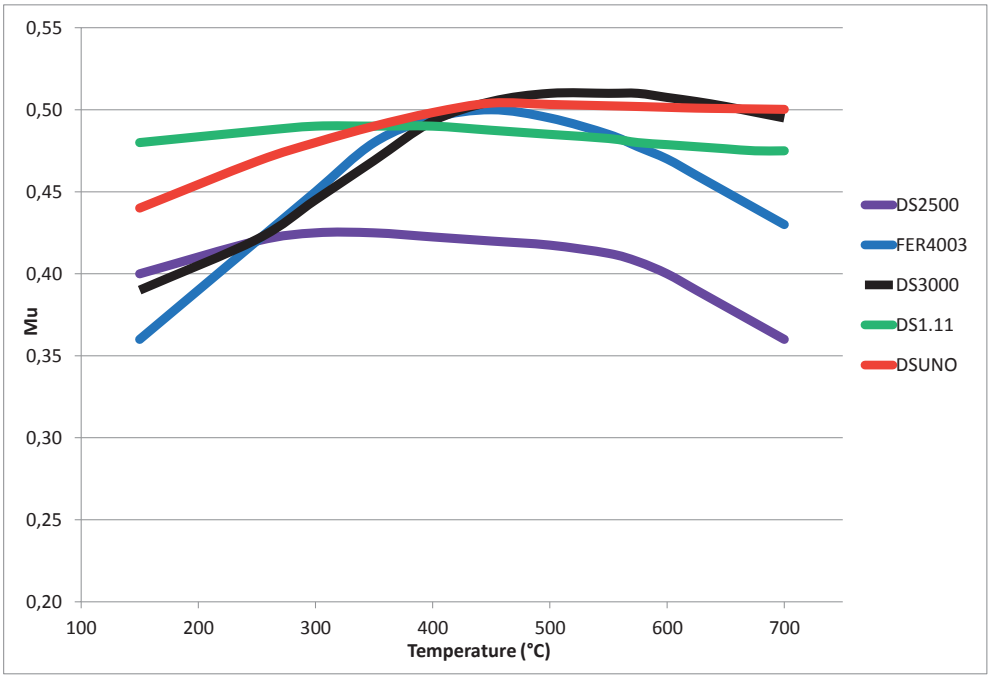

DS1.11 (W/WB)

- Heavy duty endurance material
- Applications - touring car, GT, single seat
- Average friction coefficient 0.46 over working temperature range of 200°-700°C
- Long life
- Very kind to discs

DSUNO (Z/ZB)

- Heavy duty semi-endurance material
- Applications – touring car, GT, single seat, rally
- Average friction coefficient 0.48 over working temperature range of 200°-700°C
- Very controllable torque output
- Very kind to discs
- Long life

DS2500 (H)

- Track day & light race use for all vehicle types
- Road style refinement but with race material ability to withstand heat with respect to life and μ
- Average friction coefficient of 0.42 over working temperature range of 20°-500°C

DS3000 (R)

- Heavy duty all-round material choice
- Multiple applications – touring car, rally, single seat
- Average friction coefficient 0.48 over working temperature range of 200°-650°C

FER4003 (C)

- Light/medium duty race material specifically for Formula cars
- Applications – Formula cars, occasional rally
- Average friction coefficient 0.46 over working temperature range of 200°-450°C
- Very short bedding time
- Excellent bite
- Low drag & Excellent release
- Offers control to avoid wheel lock when downforce reduces

I

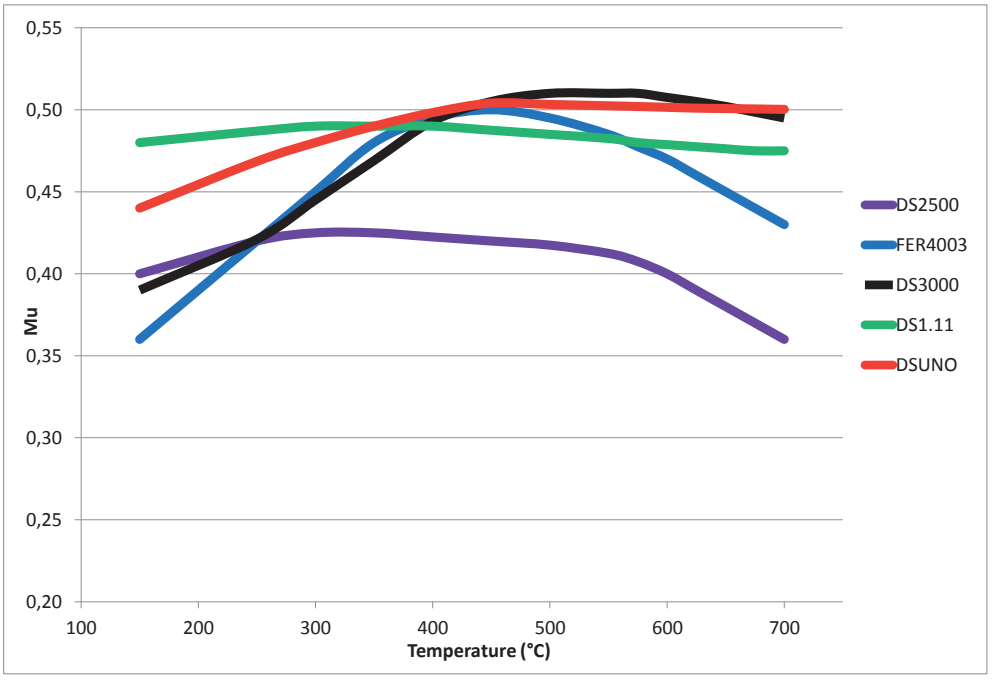

DS1.11 (W/WB)
- Materiale per gare di durata, utilizzi estremi
- Utilizzi - turismo, GT, monoposto
- Coefficiente d'attrito medio 0.46 tra 200°-700°C
- Lunga durata
- Bassa usura dei dischi

DSUNO (Z/ZB)
- Materiale per uso semi-endurance (3 / 6 ore)
- Utilizzi - turismo, GT, monoposto, rally
- Coefficiente d'attrito medio 0.48 tra 200°-700°C
- Livello d'attrito facilmente modulabile
- Bassa usura dei dischi
- Lunga durata

DS2500 (H)
- Utilizzabile per uso privato in pista e per gare soft da tutti i tipi di veicoli
- Confort stradale ma proprietà del materiale di resistere al calore garantendo buona durata e livello d'attrito superiore al ricambio originale
- Coefficiente di attrito medio di 0.42 tra 20°-500°C

DS3000 (R)
- Materiale ad alte prestazioni con ottima adattabilità
- Utilizzi multipli - turismo, rally, monoposto
- Coefficiente d'attrito medio 0.48 tra 200°-650°C

FER4003 (C)
- Materiale corsa per applicazioni medio-leggere specifico per vetture Formula (da 500 a 1100 Kg)
- Utilizzi – Vetture Formula e rally
- Coefficiente d'attrito medio 0.46 tra 200°-450°C
- Tempo di rodaggio molto breve
- Ottimo attacco iniziale
- Bassa coppia residua e ottimo rilascio pedale
- Facilmente modulabile (anti bloccaggio ruota in casi di riduzione di downforce)

F

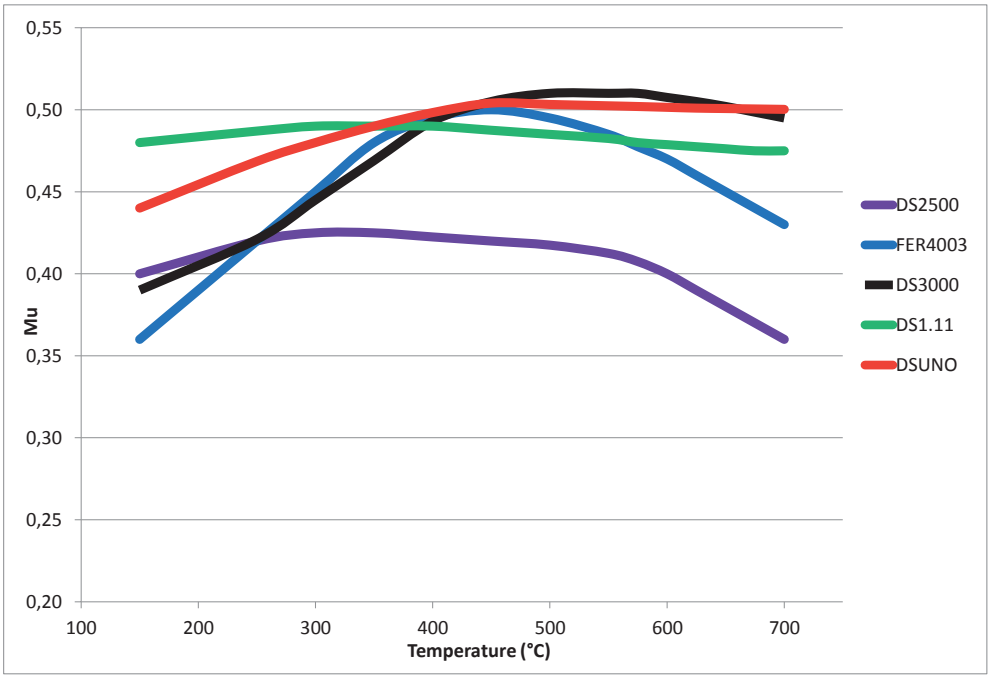

DS1.11 (W/WB)

- Matériau endurant pour applications sévère
- Applications multiples – berlines, GT, monoplaces
- Coefficient de friction moyen de 0.46, plage de température comprise entre 200°C et 700°C
- Longue durée de vie
- Peu agressif avec les disques

DSUNO (Z/ZB)

- Matériau de semi endurance pour applications sévères
- Applications multiples – berlines, GT, monoplaces, rallye, circuit
- Coefficient de friction moyen de 0.48, plage de température comprise entre 200°C et 700°C
- Couple très contrôlable, dosage facile
- Très peu agressif avec les disques
- Longue durée de vie

DS2500 (H)

- Circuit club et usage sportif pour tous types de véhicules
- Pour une conduite typée route, mais avec les capacités d'un matériau de course résistant aux hautes températures et qui limite l'usure due à la friction.
- Coefficient de friction moyen de 0.42, sur une plage de température comprise entre 20°C et 500°C

DS3000 (R)

- Matériau pour tous types d'applications sévères
- Applications multiples - berlines et monoplaces, circuit et rallye
- Coefficient de friction moyen de 0.48, plage de température comprise entre 200°C et 650°C

FER4003 (C)

- Matériau de course pour applications légères/moyennes, développé spécifiquement pour les voitures type Formule monoplace
- applications monoplace, éventuellement rallye
- Coefficient de friction moyen de 0.46, plage de température comprise entre 200°C et 450°C
- Temps de rodage très court
- Excellent mordant
- Peu de couple résiduel au lâcher de pédale, mais attaque franche
- Permet un excellent dosage afin d'éviter les blocages de roue en perte d'adhérence.

E

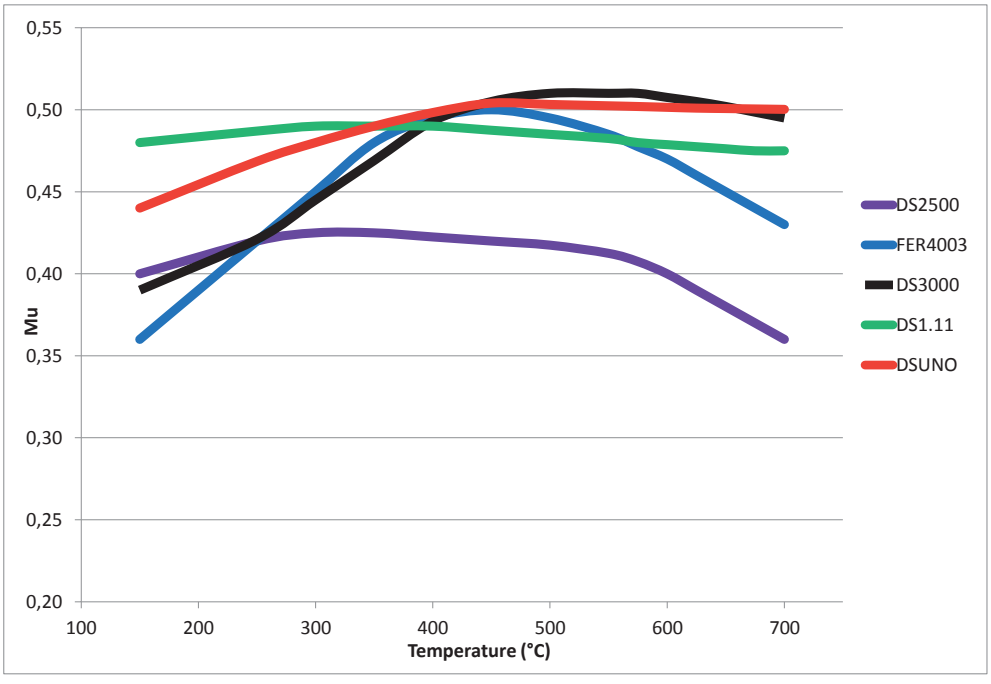

DS1.11 (W/WB)

- Material para carreras largas
- Aplicaciones: turismo, GT, Formula
- Coeficiente de friccion medio 0,46 entre 200 y 700°C
- Larga vida
- No es agresivo con los discos

DSUNO (Z/ZB)

- Material para carreras sprint de duracion media(3 horas)
- Aplicaziones: turismo, GT, Formula, Rally
- Coeficiente de friccion medio 0,48 entre 200 y 700°C
- Facilmente modulable
- Desgasta muy poco los discos
- Buena vida de el producto

DS2500 (H)

- Material para circuito y carreras suaves para todos los vehiculos
- Uso deportivo en carreteras con mayor aguante de el calor, mayor vida y mejor nivel de friccion
- Coeficiente de friccion medio de 0,42 estable entre 20 y 500°C

DS3000 (R)

- Material para competiciones de qualquier tipo
- Multiples aplicaciones : turismo, rallies y formulas
- Coeficiente de friccion medio de 0,48 entre 200 y 650°C

FER4003 (C)

- Especifico para coches Formula y lijeros
- Aplicaciones: Formula y rallies
- Coeficiente de friccion medio 0,46 entre 200 y 450°C
- Tiempo de rodaje muy bajo
- Ataque inicial muy alto
- Fricción residual en las ruedas muy baja
- Es muy sencillo prevenir el blocaje de las ruedas cuando el downforce se reduce

D

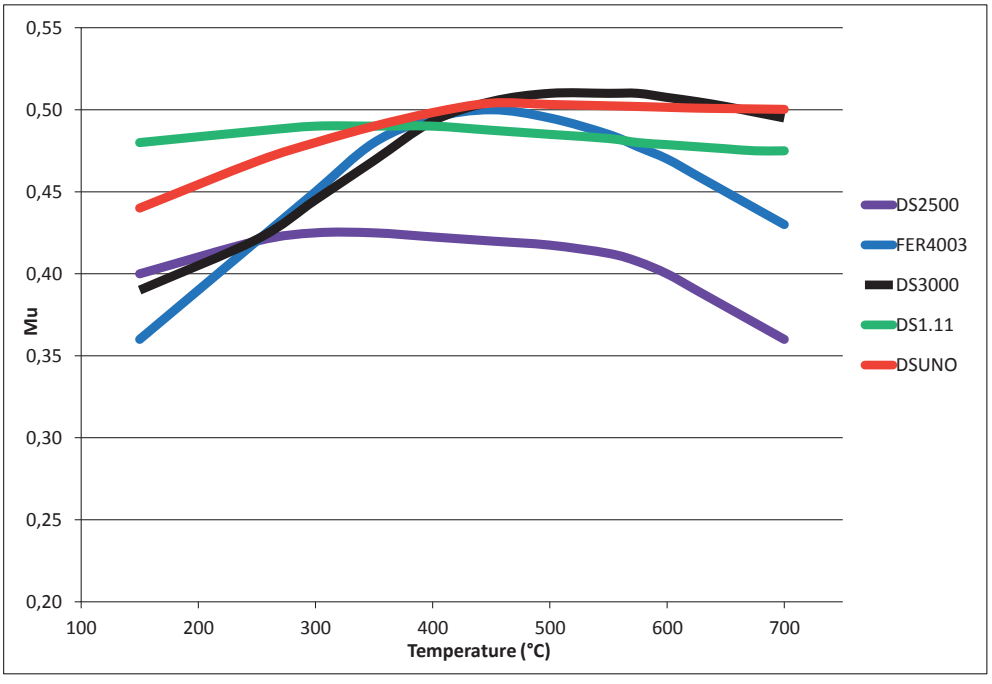

DS1.11 (W/WB)

- Langstreckentauglich, für harte Einsatzbedingungen
- Einsatzmöglichkeiten: Tourenwagen, GT und Einsitzer
- Durchschnittlicher Reibungskoeffizient bei 0,46
- Temperaturbereich 200 – 700 Grad C
- Hohe Lebensdauer
- Geringer Verschleiß der Scheiben

DSUNO (Z/ZB)

- Für erschwerte Rennbedingungen, teilweise Langstrecken tauglich.
- Anwendungen: Tourenwagen, GT-Klassen, Einsitzer, Rally.
- Durchschnittlicher Reibungskoeffizient bei 0,48.
- Temperaturbereich 200 – 700 Grad C.
- Bremskraft gut zu dosieren.
- Relativ geringe Scheibenabnutzung.
- Hohe Lebensdauer.

DS2500 (H)

- Für “Track Days” und “leichte” Rennen gedacht, geeignet für alle Arten von Fahrzeugen
- Verbesserte Straßeneigenschaften, Verwendung von Rennmaterialien mit besserem Hitzewiderstand um Lebensdauer und Reibwert zu verbessern
- Durchschnittlicher Reibungskoeffizient bei 0,42, Temperaturbereich von 20 – 500 Grad C

DS3000 (R)

- Der Allrounder für erschwerte Einsatzbedingungen
- Einsatzmöglichkeiten: Tourenwagen, GT, Rally, Einsitzer
- Durchschnittlicher Reibungskoeffizient bei 0,48
- Temperaturbereich 200 – 650 Grad C

FER4003 (C)

- Für leichte bis mittlere Einsatzbedingungen; speziell auf Formel-Fahrzeuge abgestimmt
- Einsatzmöglichkeiten: Formel-Fahrzeuge, aber auch für Rally-Einsätze
- Durchschnittlicher Reibungskoeffizient bei 0,46.
- Extrem kurze Einfahrzeit.
- Temperaturbereich 200 – 450 Grad C.
- Hervorragender Biss.
- schnelles Lösen von der Scheibe.
- Gute Kontrollierbarkeit, verhindert das Blockieren des Rades, gerade dann wenn der Anpressdruck reduziert ist.

日本語

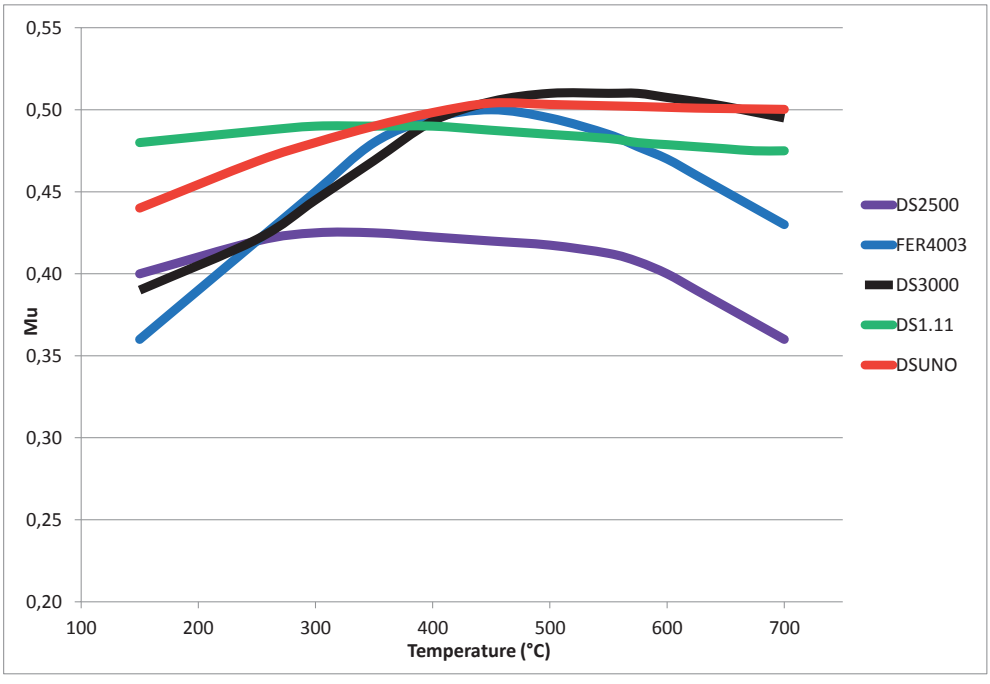

DS1.11 (W/WB)
- 重量級の耐久仕様の摩擦材
- 適用車種：セダン～GT、レーシングカー
- 平均摩擦係数 0.46, 温度範囲 200°-700°C
- 高耐久性能、
- ディスクへの低攻撃性

DSUNO (Z/ZB)
- 重量級のショートコース～耐久レース用摩擦材
- 適用車種：セダン～GT、レーシングカー
- 平均摩擦係数 0.48, 温度域 200°-700°C
- パワーのある車両にも優れたコントロール性能を発揮
- ディスクへの低攻撃性
- 高耐久性能

DS2500 (H)
- ストリート～サーキット走行用として幅広い車種に使用可能
- 耐久性、制動力、耐熱性をバランスよく設定しレース用の摩擦材でありながら一般道路用にも使用できるようにアレンジ
- 20°-500°C の温度域における平均摩擦係数 0.42

DS3000 (R)
- 軽量級～重量級まで車重量を選ばないオールラウンドな適用性
- セダン、ラリーカー、レーシングカー用と多くの車種に対応
- 平均摩擦係数 0.48, 温度域 200°-650°C

FER4003 (C)
- 特にフォーミュラーカーのライトウエイト向け/ セミレーシング用摩擦材
- 適用車種：フォーミュラーカー、ラリーカー
- 平均摩擦係数0.46, 温度域 200°-450°C
- 短時間のあたりつけ
- 優れたブレーキタッチ
- 引きずりが少なく優れたリリース性能
- 優れたコントロール性能（ホイールロック防止）

中文

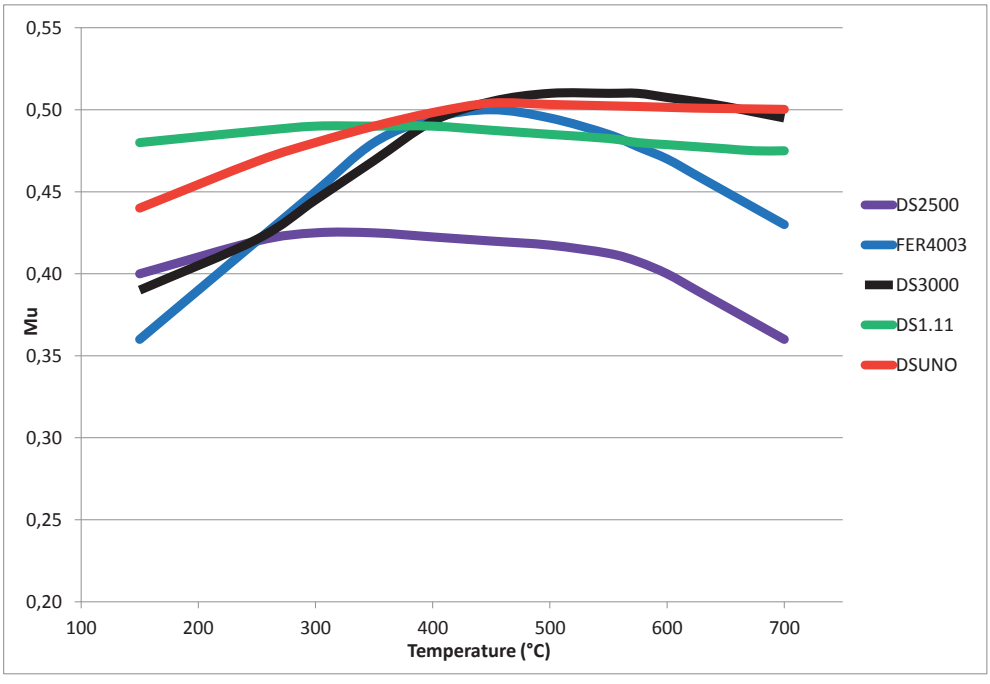

DS1.11 (W/WB)
- 長途賽事或耐力賽專用剎車皮
- 適合-房車賽, 超級房車賽
- 平均摩擦系數 0.46, 最佳工作温度 200~700°C
- 壽命特長
- 不損剎車碟

DSUNO (Z/ZB)
- 制動力至強的比賽用剎車皮
- 適合-房車賽, 超級房車賽, 拉力賽
- 平均摩擦系數 0.48, 最佳工作温度 200~700°C
- 操控感特強
- 不損剎車碟
- 耐用性高

DS2500 (H)
- 適合一般車輛用作街道快走和 TRACK DAY 使用
- 擁有原廠皮的舒適度, 以及賽車皮的耐熱及制動效能
- 平均摩擦系數0.42, 最佳工作温度 20~500°C

DS3000 (R)
- 標準型競賽用剎車皮
- 適合-房車賽, 拉力賽
- 平均摩擦系數 0.48, 最佳工作温度 200~650°C

FER4003 (C)
- 方程式賽車專用剎車皮
- 適合-方程式賽車和輕型車種
- 平均摩擦系數 0.46, 最佳工作温度 200~450°C
- 磨合迅速
- 初期制動力特強
- 超低阻力
- 操控敏銳

Bedding

Bedding of Race Pads

The aim is to bring the pads to full race temperatures, but slowly (too quick bedding results in glazing). This is done by a series of laps where full speeds may be attained but lighter braking pressures are used (i.e. the driver applies the brakes earlier). It is important that the pads are allowed to cool after the bedding process before racing.
Ideally the pads will arrive at temperatures in excess of 500°C during the bedding. Pads smoking during the cool-down is not a cause for concern. Specifically for DS1.11 and DSUNO temperatures should arrive at between 500°C and 700°C (as an indication: green and orange thermal paints applied to discs to turn white completely).

Perform at least 15 trial brake applications, initially with reduced pressures (50% of the normal that might be used for that same brake application were it to occur under race conditions) building up to full decelerations after the 15 applications. To shorten the procedure applications can be made along the straights as well as at corners.

On completion of the trial applications, return to the pit lane. Inspect the surface of the brake pads from the two wheels that have been working the hardest. There should be evidence of contact over the full pad area, but without glazing. The pads are now ready to race. Whilst it is recommended that pads are inspected after bedding, if time does not allow this and paragraph 1 has been carried out appropriately, so long as a short period of time has elapsed to allow the brake system to cool (ideally to below 100°C – this might take in excess of five minutes), the pads will be ready to race.

Rodaggio di Pastiglie Racing

L'obbiettivo in fase di rodaggio è di portare la temperatura delle pastiglie che si avrebbe in condizione di gara ma in modo graduale (se la procedura verrà effettuata in modo troppo rapido si potrà avere il fenomeno della vetrificazione superficiale). Per conseguire tale obbiettivo si potranno svolgere test ad alta velocità, utilizzando pressioni di circa il 50% rispetto alle condizioni gara. Mai usare acceleratore e freno allo stesso momento. E' importante che le pastiglie, dopo il rodaggio, possano avere il tempo di raffreddarsi prima di essere utilizzate in gara. Idealmente le pastiglie dovrebbero arrivare durante tale procedura a temperature intorno ai 500°C. Il fatto che le pastiglie fumino durante la fase di rodaggio non significa che il prodotto abbia un problema. Specifico per il rodaggio delle mescole DS1.11 e DSUNO è che le temperatura arrivi a 500°C e non superi i 700°C. (se usate le vernici termo viranti sui dischi, dovrete vedere virare completamente il verde e l'arancione).

Effettuate circa 15 frenate alla metà della pressione che usereste in gara e mantenetela per piu' tempo rispetto a situazioni di gara. Dopo le iniziali 15 frenate (circa 30 secondi tra una e l'altra) potrete iniziare a raggiungere la massima decelerazione del veicolo (sempre circa 15 frenate). Per accorciare i tempi di rodaggio, queste frenate potranno essere effettuate anche sul dritto e non necessariamente solo nei punti di frenata del circuito.

Terminati questi cicli di frenate tornate nella pit lane per ispezionare le pastiglie. Dovrete vedere che la superficie del materiale d'attrito sia completamente in contatto con il disco (almeno l'80% della stessa) e che non ci siano evidenti problemi di vetrificazione. A questo punto le pastiglie sono pronte per la gara o i test che dovrete effettuare. Nonostante consigliamo l'ispezione delle pastiglie dopo il rodaggio, se il tempo a disposizione non lo consentisse, ma avete espletato la procedura consigliata, sentitevi tranquilli di poter gareggiare ed avere la massima efficacia frenante dal prodotto.

Rodage de plaquettes de course

L'objectif est d'amener les plaquettes aux températures maximales de course, mais lentement (le rodage trop rapide entrainant un glaçage). Cela se fait par une série de tours où les vitesses maximales peuvent être obtenues, mais en utilisant une pression de freinage inférieure (c.-à-le conducteur freine plus tôt). Il est important que les plaquettes puissent refroidir après le rodage et avant la course.
Idéalement les plaquettes arriveront à des températures supérieures à 500°C au cours du rodage. Les plaquettes fumeront lors du refroidissement, cela est normal. Pour les DS1.11 et DSUNO, les températures doivent atteindre entre 500°C et 700°C (à titre indicatif: les peintures thermiques verte et orange appliquées aux disques doivent blanchir complètement).

Effectuer au moins 15 freinages de rodage, d'abord avec des pressions réduites (50% de la pression normale en course) jusqu'à des pressions complètes pour les 15 freinages suivants, et ce toutes les 30 secondes maximum. Pour raccourcir le délai de rodage vous pouvez faire les freinages de rodage en ligne droite ainsi qu' en courbe, et pas nécessairement dans des zones de freinage du parcours.

À l'issue du rodage, revenir aux stands. Inspectez la surface des plaquettes de frein des deux roues les plus en contrainte. Il doit y avoir des preuves de contact sur la surface complète de la plaquette (ou au moins 80%), mais sans apparentes traces de glaçage.
Les plaquettes sont maintenant prêtes pour la course. Bien qu'il soit recommandé d'inspecter les plaquettes après la séance de rodage, si le temps ne le permet pas et que la procédure de rodage ait été correctement faite, attendre un court laps de temps pour permettre au système de freinage de refroidir (idéalement en dessous de 100°C - ce qui peut prendre environ cinq minutes), les plaquettes seront alors prêtes pour la course.

Rodaje Pastilla Racing

El objetivo de la fase de rodaje es la de poner la pastilla en temperatura como la que va a tener en condiciones de carrera pero de un modo gradual (si el procedimiento se realiza de modo muy rápido puede aparecer el fenómeno de cristalización superficial). Para conseguir tal objetivo se podrá realizar a lata velocidad, utilizando una presión de cerca del 50% respecto a las condiciones de carrera. No utilizar nunca el acelerador y el freno al mismo tiempo. Es importante que las pastillas tengan el tiempo suficiente de refrigeración antes de su utilización en carrera. El hecho de que las pastillas produzcan humo durante la fase de rodaje no significa que el producto tenga problemas. El rodaje especifico para la calidad DS1.11 y DSUNO es que la temperatura de la pastilla sea superior a 500ºC pero no superior a 700ºC (Si utiliza las pinturas de análisis de temperatura en los discos el color verde y el naranja deben cambiarse completamente).

Efectuar cerca de 15 frenadas a la mitad de la presión que se realiza normalmente en carrera y mantenerla por mas tiempo que en situación de carrera. Despues de las iniciales 15 frenadas (cerca de 30 segundos entre una y otra) podrá llegar a tener la máxima deceleración del vehiculo (siempre cerca de 15 frenadas). Para acortar el tiempo de rodaje, estas frenadas podrán ser realizadas incluso en línea recta no teniendo que realizarse necesariamente en los puntos de frenada del circuito.

Terminado este ciclo de frenadas volver a la línea de Pit lane para inspeccionar las pastillas. Deberá ver que la superficie del material de fricción ha estado en contacto con la superficie del discos (al menos del 80% de la superficie) y que no se vean signos evidentes de cristalización. Llegado a este punto las pastillas están rodadas para la carrera o test. No obstante recomendamos la inspección de las pastillas después del rodaje si el tiempo que disponemos nos lo permite, pero el proceso se ha conseguido, puedes estar tranquilo de poder tener la máxima eficacia de frenada del producto.

Einfahren Von Renn-Bremsbelägen

Das Ziel ist, die Beläge auf volle Renntemperatur zu bringen, aber langsam (zu schnelles Einfahren bewirkt Verglasung). Dies geschieht in einer Reihe von Runden, wo volle Geschwindigkeit erreicht werden kann, jedoch mit leichteren Bremsvorgängen (der Fahrer bremst früher). Es ist wichtig, dass die Beläge nach dem Einfahren abkühlen können, bevor das Rennen startet. Idealerweise erreichen die Temperaturen mehr als 500°C während des Einfahrens. Rauchende Beläge während des Abkühlens sind kein Grund zur Sorge. Speziell bei den DS1.11 und DSUNO sollten die Temperaturen zwischen 500°C und 700°C liegen (als Hinweis: grüne und orange Thermofarbe auf den Scheiben sollte komplett weiß werden).

Machen Sie wenigsten 15 Bremsvorgänge, anfangs mit reduziertem Druck (50% des normalen, bei gleichem Bremsvorgang unter Rennbedingungen) bis zum vollständigen Abbremsen nach 15 Vorgängen. Um das Einfahren abzukürzen, kann dies sowohl auf gerader Strecke als auch in Kurven erfolgen.

Nach Abschluss der Bremsversuche kehren Sie in die Boxengasse zurück. Untersuchen Sie die Oberfläche der Bremsbeläge der beiden Räder, die am härtesten beansprucht worden sind. Es sollten über die gesamte Bremsbelags fläche Kontaktspuren zu sehen sein, jedoch ohne Verglasung. Die Beläge sind rennfertig. Obwohl empfohlen wird, die Beläge nach dem Einfahren zu untersuchen, die Zeit fehlt, jedoch §1 sorgfältig ausgeführt wurde und sofern kurze Zeit vergangen ist, um das Bremssystem zu kühlen (idealerweise unter 100°C – geschieht in ca. 5 Minuten), können die Beläge im Rennen eingesetzt werden.

競賽煞車片的磨合

目標是以循步漸進的方式把煞車片提升至比賽温度，以鞏固及提升煞車片的性能。(太快速的磨合會令煞車片的表面磨成光滑，仿似鏡面，影響效能。)
競賽煞車片的磨合最好是在賽車塲上跑兩三圈來完成。駕駛方法及速度跟平常一樣，而最重要的就是`提早煞車’(並將煞車力度減至平常的一半，即約50%)。

重覆以上煞車動作15次。下一步是以漸進式增加煞車的力度(約10次)，直至力度恢復到平常一樣(即100%)。當煞車片的温度提升至超過500℃，再經過冷卻之後，整個磨合過程便已完成！(DS1.11及DSUNO的磨合温度比一般更高，達500至700℃。此時塗在煞車碟上的綠色及橙色温度漆均已變成白色。)

如時間許可，當完成磨合過程之後，將車駛回維修站通道，檢查煞車片是否已完全磨合(全面接觸)，並且沒有產生光面。但是如果時間緊迫，只需於完成磨合之後，給大約15分鐘時間煞車片冷卻至100℃以下，便可以進行比賽!

レーシングパッドの慣らし

慣らしの目的はパッドの温度をレース本番相当に上げることです。ただしゆっくりと
行います（急激に温度を上げると表面硬化してしまい、性能劣化を引き起こします）
サーキットで徐々速度を上げていき、軽めの踏力でブレーキングを始めてください。
最終的にはフルスピードからのブレーキングを行います。その後、走行しながら冷却
して下さい。
慣らしの間に、パッド温度が500℃位になるのが理想的で、冷却中に煙が出てくるのは
問題ありません。特にＤＳ１.１１とＤＳUNOの場合は500℃から700℃くらいの間に
なるのが理想です。それはサーモペイントの緑、オレンジが完全に変色する状態です。

15回程、軽めのブレーキングを行います（レース本番の５０％程の踏力）
慣らしを早めに行うためにストレートでブレーキングしてもかまいません。

その後、ピットに戻り、過激に使われている左右のパッドの表面を確認して下さい。
（通常フロントです）パッド全体に当たりが出て表面が硬化していなければ、完了です。
もし、パッドの確認ができない場合は、5分くらい冷やせば（100℃以下）大丈夫です。

New Pad Technology

SILOXANE

In the braking world, “Ceramic” is a word that is heard a lot. However “Ceramic” can merely indicate that the product contains something, anything, that is not “organic.” Organic means a substance whose molecular structure is largely based upon carbon. However for an engineer to understand a material as ceramic, he or she knows that this must mean that its performance defining core must be non-organic. In the case of a friction material this is the resin – the glue which holds the pad together; the matrix that holds the other components in place, allowing them to do their job. For over 100 years this job has been, and continues to be done in brake pads almost exclusively by a phenolic resin. A highly durable, versatile binder, yet resolutely an “organic” material.

The appeal of a non organic based brake pad is simple: Phenolic resins begin to decompose at temperatures above 300-400°C. In a racing pad, where these temperatures would be regarded as a operating minimum that’s bad news. It means the pads wears more as the carbonaceous material decomposes, that the pedal becomes spongy as the pad looses its rigidity and that the brake will fade, as gaseous decomposition products try to escape at the disc/pad interface. The problem is, no one had ever found a viable alternative to the phenolic based brake pad, aside from the sintered metal compounds. These latter materials work well in motorcycle racing, but the far higher weight of a car makes heat transfer to the caliper an almost insurmountable problem in auto racing. Additionally, as essentially an incompressible block of metal, sintered pads are often judged to lack the “feel” that a racing driver requires, being little more than an on/off switch for the brake.

However, in DS1.11 and DSUNO Ferodo Racing can offer a true “ceramic” race brake pad. The resin binding system replacing the traditional phenolic is described as a “Siloxane” In layman’s terms, this means that the 3D molecular network that holds the pad together is formed from chains of silicon rather than carbon atoms. These are impervious to temperature. In fact, at about 700°C, they actually undergo a chemical phase transition which actually pulls the pad together even more strongly. Additionally, the cured (i.e “set” during the manufacturing process) resin, being a hard, abrasive ceramic, has friction enhancing properties. So there’s a double benefit. No phenolic carbon to decompose so wear is low and an abrasive substructure that keeps the friction coefficient (μ) high!

DS1.11 is recommended for FIA GT, Touring Car, Formula cars, Group N and Stock Car (NASCAR) in the USA. DSUNO is used in rally applications and sprint races, though drivers who appreciate it’s very high friction have also been using it for touring car and group N applications too. Both are characterized by long life, high μ and a firm pedal under all conditions, but the torque profile of DS1.11 during a brake application is flat, whilst that of DSUNO rises, making them complementary compounds, depending on vehicle type and driver preference.

THE BACKGROUND: PERFORMANCE REQUIREMENTS

Whilst issues of Noise, Vibration and Harshness (problems associated and known in the industry by the generalised abbreviation “NVH”) have become of paramount importance for the braking of road vehicles, they are of little concern in racing. Broadly speaking the performance requirements on the track are as follows:

High Friction. Very high decelerations are required, often from systems that are not servoassisted. The combination of aerodynamic downforce and large, sticky tires means that the limiting factor in braking is often the force applied via the driver’s foot rather than road/tire adhesion. The requirement for maximum braking torque from the available muscle power means that materials with a high coefficient of friction μ are preferred - in other words those materials that translate the highest possible percentage of the applied force into vehicle deceleration No fade. Fade is the term used for a decrease in friction performance at high temperatures. High vehicles speeds, high decelerations, frequent brake applications and limited cooling (ducting air creates drag) means that discs and pads get very hot – upto 900°C. Yet I must be maintained even under these extreme conditions.

Low pad compressibility. This results in shorter pedal travel, one of the driver’s key requirements. Ideally the pad compressibility will be the same at all temperatures and will not change throughout a race.

The “right” friction history. This is sometimes called “stop shape” or “time history” and refers to how the friction coefficient varies through a brake application. As such it is the response of the braking system to increasing temperature with decreasing speed. This is as close to an objective description of the hard-to-define brake “feel” as is possible to make.

Generally speaking, drivers of cars with greater downforce prefer a flat response (this is because the last thing a driver needs is friction ramping up at the apex of the bend, just as downforce is reducing due to his lower speed: result; wheel lock!) whereas those vehicles with less downforce often prefer rising friction through the stop. DS1.11 is an example of a material with a flatter stop shape, whilst DSUNO has a rising torque output (see graph) Initial bite. How quickly the brake responds to the driver’s pedal. Almost exclusively, the quicker the better.

Pad and Disc life. Not always important but vital in endurance racing where the number of pit-stops must be minimised and, not least, economically in that fewer disc and pad changes means fewer disc and pad purchases.

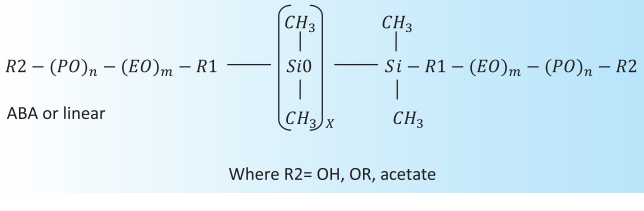

Generalized chemical structure of siloxane.

Brake Fluids





All fluids are of Glycol based ether composition, and are suitable for brake and clutch use. Additionally they have the following characteristics:

		DOT5.1	Ferodo Formula	Ferodo Super Formula
Technical Details: Typical measured values	Dry boiling point (°C)	270	310	328
	Wet boiling point (°C)	185	205	200
	Kinematic Viscosity (cSt)	800	1650	1500
Availability	0,25 litre Box = 24 bottles	FBZ025	n/a	n/a
	0,50 litre Box = 24 bottles	FBZ050	DSF050	FSF050
	1 litre Box = 12 bottles	FBZ100	n/a	n/a
	5 litres Box = 4 bottles	FBZ500	n/a	n/a

Bottles are sold in complete boxes only

DOT5.1

- Recommended for road use
- Adheres to DOT 5.1 specification
- Low viscosity means ideally suited for ABS/ESP braking systems
- Low viscosity down to -40°C allows use under all conditions
- Available in 4 bottle sizes
- Low corrosion
- Very low rubber swell

Ferodo Formula

- Recommended for track day & race use
- High wet and dry boiling point
- Low corrosion
- Low rubber swell
- Low viscosity for a race fluid (falls within DOT 4 road spec allowing road use)

Ferodo Super Formula

- Premium Product
- Recommended for race use
- Market leading high wet and dry boiling point
- Very low corrosion, with additives to render more compatible with Mg components
- Low rubber swell
- Super-low viscosity for a race fluid of such high B.pt. (falls within DOT 4 road spec allowing road use)
- Super high lubricity ➛ reduces clutch component wear even in problem applications.

WARNING:
Recommended for use by experienced mechanics only

Contains polyalkylene glycol ether and other esters. Keep out of reach of children. Avoid excessive skin contact.
If swallowed, seek medical advise and show the container. In case of eye contact, flush with water for 10 minutes.

FERODO®

PRODUCT RANGE



FERODO®
RACING

Car Racing Pads Products Range

Part Number	DS2500 H	4300 C	DS3000 R	DS 1.11 W	DS 1.11 (THERMALLY BEDDED) WB	DSUNO Z	DSUNO (THERMALLY BEDDED) ZB
FCP2	✓	✉	✓	✉		✓	
FCP3	✓		✓	✉			
FCP9	✓		✓				
FCP11	✓		✓	✉		✓	
FCP22	✓						
FCP29	✓		✓				
FCP39		✉					
FCP72	✓		✓				
FCP93	✓		✓				
FCP96	✓		✓				
FCP105			✉				
FCP116	✓		✓			✉	
FCP167	✓	✓	✓	✉		✓	
FCP170		✓					
FCP173	✓		✓				
FCP206	✓		✓			✉	
FCP253	✉						
FCP256	✓		✓				
FCP276	✓		✓				
FCP296	✓		✓	✉			
FCP308	✓		✓				
FCP342	✓	✓	✓	✗		✓	
FCP351	✓		✓			✓	
FCP360	✓						
FCP370	✓	✉	✓	✉		✓	
FCP372	✓		✗	✉			
FCP385	✉						
FCP392	✓		✓	✉			
FCP393	✓		✓				
FCP399	✓		✓				
FCP406	✓		✓			✓	
FCP408	✓		✓			✉	
FCP409	✓		✓				
FCP415	✓		✓				
FCP419	✓						
FCP434	✓		✉				
FCP441		✗	✓				
FCP448	✓		✓	✉			
FCP451	✓		✓	✉		✓	
FCP461	✓		✓				
FCP472	✓						
FCP483	✓		✓			✉	
FCP484	✓	✗	✗				
FCP487	✓		✉				
FCP519			✉	✉			
FCP524			✓				
FCP527	✓		✓				
FCP535	✓	✗	✓				
FCP541	✓		✓	✉		✓	
FCP546	✓		✓				
FCP558	✓	✉	✓				
FCP560	✓		✓	✉			
FCP565	✓		✓	✓			
FCP578	✓		✓	✉			
FCP584	✓		✓				
FCP586	✓		✓				
FCP590	✓		✓	✉			
FCP596	✓		✓				
FCP598	✓		✓				
FCP600	✓		✗				
FCP602	✓		✉				
FCP613	✓		✓				
FCP617	✓						
FCP638	✓						

Part Number	DS2500 H	4300 C	DS3000 R	DS 1.11 W	DS 1.11 (THERMALLY BEDDED) WB	DSUNO Z	DSUNO (THERMALLY BEDDED) ZB
FCP646	✓			✉			
FCP647	✉						
FCP653				✉			
FCP660	✓		✓	✉			
FCP685	✓		✓				
FCP691	✓						
FCP721	✓		✓	✉			
FCP725	✓		✓	✓			
FCP726	✓		✓				
FCP732	✓		✓				
FCP748	✓						
FCP761	✉						
FCP765	✓		✓	✓		✓	
FCP766	✗		✉				
FCP774	✓	✗	✓				
FCP775	✓		✓				
FCP776	✓		✓			✉	
FCP777	✓						
FCP779	✓		✓	✉			
FCP789	✓		✓				
FCP790	✓		✓				
FCP809	✓	✓	✓	✉		✓	
FCP810	✓	✉	✓	✉		✉	
FCP815	✓	✉	✓	✉			
FCP817	✓		✓				
FCP823			✉	✉			
FCP825	✓	✓	✓	✓		✓	
FCP832	✓		✓				
FCP840		✉	✓				
FCP845	✓	✓	✓	✉			
FCP850	✓		✓	✓		✓	
FCP856	✓		✉				
FCP857	✓		✓	✉			
FCP859	✉		✓				
FCP867	✓						
FCP876	✓		✓				
FCP878	✓		✓				
FCP881	✉						
FCP891	✓		✓	✉			
FCP905	✓		✓				
FCP925	✓		✓				
FCP948	✓		✓				
FCP956	✓		✓	✉			
FCP986	✓		✓	✉		✓	
FCP995	✓						
FCP997	✓		✉				
FCP1001	✓					✓	
FCP1011	✓		✉				
FCP1012	✓						
FCP1021	✓						
FCP1049	✓						
FCP1050	✓						
FCP1052	✓		✓				
FCP1056	✓						
FCP1063	✓		✓				
FCP1068	✓						
FCP1073	✓			✓		✉	
FCP1081	✓		✓				
FCP1082	✓		✉				
FCP1093	✓		✗				
FCP1094	✓		✉			✉	
FCP1112	✓						
FCP1113	✓		✓				
FCP1133	✓	✗	✓				

Part Number	DS2500 H	4300 C	DS3000 R	DS 1.11 W	DS 1.11 (THERMALLY BEDDED) WB	DSUNO Z	DSUNO (THERMALLY BEDDED) ZB
FCP1134	✓		✗				
FCP1160	✓						
FCP1162	✓						
FCP1280	✓		✓	✉			
FCP1281	✓		✓	✓			
FCP1283			✓				
FCP1285	✓		✓				
FCP1289	✗						
FCP1293	✓						
FCP1294	✉						
FCP1295	✓						
FCP1298	✓		✓	✉		✉	
FCP1300	✓						
FCP1301	✓		✉				
FCP1307	✓		✓	✓			
FCP1308	✓		✓	✓			
FCP1312	✓					✉	
FCP1318	✓		✉				
FCP1319	✓						
FCP1323	✓						
FCP1324	✓						
FCP1327	✓		✉				
FCP1333	✓		✓				
FCP1334	✓		✓	✓		✓	
FCP1348	✓		✓	✓		✓	
FCP1349	✓		✉				
FCP1368	✓		✗				
FCP1370	✓		✓				
FCP1372	✓		✓				
FCP1376	✓		✓				
FCP1378	✓		✓				
FCP1382	✓						
FCP1392	✓						
FCP1394	✓		✓				
FCP1399	✓		✓			✉	
FCP1419	✓		✓				
FCP1424	✓						
FCP1430	✓						
FCP1436	✉						
FCP1441	✓		✉				
FCP1444	✓		✓	✓			
FCP1456	✓						
FCP1457	✓						
FCP1459			✉				
FCP1466	✓		✉			✉	
FCP1467	✓		✓			✓	
FCP1468	✓		✓				
FCP1469	✓		✓				
FCP1483	✓		✉	✉		✉	
FCP1491	✓			✓			
FCP1499	✓		✓	✓			
FCP1501			✉				
FCP1520	✓						
FCP1521	✓						
FCP1528	✓		✓				
FCP1540	✓						
FCP1543	✓		✓				
FCP1553	✓		✉	✉		✉	
FCP1560	✓		✓	✓		✉	
FCP1561	✓		✓	✓		✓	
FCP1562	✓	✓	✓	✓		✓	
FCP1563	✉			✉		✉	
FCP1568	✓		✓				
FCP1573	✓						

FERODO RACING

Updated on November 2020

Car Racing Pads Products Range

Part Number	DS2500 H	4300 C	DS3000 R	DS 1.11 W	DS 1.11 (THERMALLY BEDDED) WB	DSUNO Z	DSUNO (THERMALLY BEDDED) ZB
FCP1617			✓	✉		✓	
FCP1625	✓						
FCP1626	✓						
FCP1628	✓		✓	✓		✓	
FCP1629	✓						
FCP1631	✉						
FCP1636	✓		✉				
FCP1639	✓			✓		✓	
FCP1640	✓			✉		✉	
FCP1641	✓		✉	✓		✓	
FCP1655	✓						
FCP1661	✓						
FCP1664	✓		✓	✓		✉	
FCP1667	✓		✓	✓		✓	✓
FCP1672	✓			✉		✓	
FCP1676	✓						
FCP1690	✓						
FCP1693	✓						
FCP1698	✓						
FCP1706	✓			✉			
FCP1717	✓						
FCP1725	✉		✉	✉		✉	
FCP1747	✓						
FCP1751	✉		✉				
FCP1765	✓			✉		✓	
FCP1773	✓						
FCP1783			✉				
FCP1786	✓						
FCP1790	✓		✉				
FCP1795	✓			✉		✉	
FCP1805	✓						
FCP1806	✓			✉			
FCP1807	✓					✉	
FCP1808	✓						
FCP1858	✓						
FCP1859	✓						
FCP1862	✓						
FCP1894	✓						
FCP1917	✓						
FCP1931	✓			✉			
FCP1947	✓						
FCP1954	✉						
FCP1975	✓			✓			
FCP1984	✓						
FCP4044	✓		✉				
FCP4045	✓						
FCP4050	✓			✉			
FCP4064	✓						
FCP4080	✓			✓			
FCP4081	✓						
FCP4168	✓		✉	✓		✓	
FCP4172	✓						
FCP4173	✓						
FCP4187	✓			✓			
FCP4191	✓						
FCP4217	✓		✉			✉	
FCP4218	✓		✉			✉	
FCP4223	✓						
FCP4249	✓			✓		✉	
FCP4262	✓			✓			
FCP4308	✓						
FCP4316	✓		✉				
FCP4327	✓						
FCP4353	✉						

Part Number	DS2500 H	4300 C	DS3000 R	DS 1.11 W	DS 1.11 (THERMALLY BEDDED) WB	DSUNO Z	DSUNO (THERMALLY BEDDED) ZB
FCP4354	✓						
FCP4379	✓						
FCP4381	✓						
FCP4394	✓						
FCP4404	✓						
FCP4412	✓						
FCP4413	✓						
FCP4416	✓						
FCP4425	✓						
FCP4426	✓		✓			✓	
FCP4430	✓						
FCP4433	✓					✓	
FCP4434	✓						
FCP4466	✓						
FCP4467	✓						
FCP4468	✓						
FCP4489	✓					✉	
FCP4587	✓						
FCP4611	✓			✓		✓	
FCP4612	✓			✓			
FCP4663	✓			✉		✓	
FCP4664	✓			✓		✗	✓
FCP4665	✓			✓		✗	✓
FCP4671	✓						
FCP4697	✓			✓			
FCP4711	✓			✉		✉	
FCP4712	✓			✓		✓	
FCP4713	✓			✓			
FCP4805	✓			✉		✉	
FCP4806	✓		✉				
FCP4816	✓			✉			
FCP4821	✓						
FCP4830	✓			✓		✉	
FCP4835	✓					✓	
FCP4872	✓			✉		✉	
FCP4873	✓						
FCP4955	✓			✓			
FCP4972	✓						
FCP5030	✓			✓			
FCP5037	✓		✉				
FCP5055	✓						
FCP5086	✓			✓			
FCP5099	✓						
FCP5108	✓			✉			
FCP5130	✓						
FRP101			✓			✉	
FRP201	✓	✉	✓	✓		✓	
FRP202	✓	✓	✓				
FRP203	✓		✓			✓	
FRP212	✓		✓	✓		✓	
FRP216	✓	✉	✓	✓		✓	
FRP217			✓	✉		✓	
FRP218	✓	✓	✓	✓			
FRP219	✓	✓	✓	✓		✓	
FRP302	✓	✗	✓	✉		✗	✓
FRP308	✓	✉	✓	✓		✓	
FRP501	✓		✓	✓		✉	
FRP502	✓	✓	✓	✓			
FRP503	✗		✓	✓			
FRP504	✉		✓	✓		✓	
FRP506		✉	✓	✓			
FRP1058			✓				
FRP1059			✗				
FRP1060			✓			✓	

Part Number	DS2500 H	4300 C	DS3000 R	DS 1.11 W	DS 1.11 (THERMALLY BEDDED) WB	DSUNO Z	DSUNO (THERMALLY BEDDED) ZB
FRP1061			✉				
FRP1064			✉				
FRP1077	✓		✓	✓		✓	
FRP1078			✓	✗	✓	✗	✉
FRP1079	✉	✉	✓				
FRP3000	✓		✓	✉			
FRP3001	✗	✗	✗				
FRP3003	✓		✓	✓		✗	
FRP3004			✉				
FRP3006	✉						
FRP3007	✉		✓			✓	
FRP3009			✉				
FRP3012			✉	✉			
FRP3014	✉		✓	✓		✗	✓
FRP3015				✉			
FRP3018	✓		✓	✗	✓	✉	
FRP3020			✓				
FRP3021		✉					
FRP3022			✓	✉			
FRP3023			✓				
FRP3024			✓	✓		✓	
FRP3025			✉				
FRP3026			✉				
FRP3027	✓		✉				
FRP3028	✓		✓	✉		✉	
FRP3029	✉		✉	✓		✓	
FRP3030			✉			✓	
FRP3031			✉	✓		✗	✓
FRP3032			✓			✉	
FRP3033			✉				
FRP3034			✉				
FRP3035			✉				
FRP3037				✉			
FRP3039	✉		✓	✉		✗	✉
FRP3040						✉	
FRP3042			✓	✓			
FRP3043			✓			✉	
FRP3044			✓			✉	
FRP3045			✉				
FRP3046				✓			
FRP3050	✓		✓	✓			
FRP3051	✓		✓	✓			
FRP3053			✉	✓			
FRP3054	✓		✓	✓		✓	
FRP3055				✓		✗	✓
FRP3056	✓	✓	✓			✉	
FRP3057	✓		✉	✓		✓	
FRP3058	✗		✓	⚠		✉	
FRP3059			✓	✗			
FRP3060			✗	✓			
FRP3061			✉	✉		✓	
FRP3062				✉			
FRP3067	✓		✓	✓		✉	
FRP3069	✓		✓	✉		✉	
FRP3070			✓	✓		✉	
FRP3071	✉	✓	✓	✓		✓	
FRP3073			✓				
FRP3074			✓				
FRP3075	✓			✓		✗	✉
FRP3076	✓		✓			✉	
FRP3077	✓		✓	✓		✗	
FRP3078	✉		✓			✉	
FRP3080			✓	✓		✓	
FRP3081	✓		✓	✉		✉	

Car Racing Pads Products Range

Part Number	DS2500 H	4300 C	DS3000 R	DS 1.11 W	DS 1.11 (THERMALLY BEDDED) WB	DSUNO Z	DSUNO (THERMALLY BEDDED) ZB
FRP3082	✓		✓	✉		✉	
FRP3083	✓		✓	✓		✓	
FRP3084	✓		✓	✓		✓	✉
FRP3085	✓		✓	✓		✓	
FRP3086			✓				
FRP3087			✓	✓		✓	
FRP3088			✓	✗		✓	
FRP3091			✉				
FRP3092		✉		✓		✉	
FRP3094	✉			✓			
FRP3095	✓			✓		✗	✉
FRP3096	✓			✓		✗	✉
FRP3097	✓		✓	✓		✓	
FRP3098	✓		✓	✓		✓	
FRP3099	✓		✓	✓		✉	
FRP3100	✓		✓				
FRP3101						✉	
FRP3102				✓		✓	
FRP3103			✉	✉		✓	✉
FRP3104	✓	✓	✓			✉	
FRP3105	✉		✉				
FRP3106	✓			✗	✓	✓	
FRP3107	✓		✓				
FRP3108	✓					✓	
FRP3109	✉						
FRP3110			✉	✗	✓	✗	✓
FRP3112						✉	
FRP3113	✉		✓			✉	
FRP3114	✓		✓	✉		✉	
FRP3115	✓		✉	✓			
FRP3116	✓		✓	✓		✓	
FRP3117			✓				
FRP3118				✓			
FRP3119						✓	
FRP3120	✓						
FRP3121	✓					✉	
FRP3122	✉						
FRP3123						✗	✓
FRP3126	✓						
FRP3127	✓						
FRP3128						✓	✉
FRP3129	✓						
FRP3130	✓			✉			
FRP3133	✓			✓		✓	
FRP3134	✓		✉			✓	
FRP3135	✓		✉			✉	
FRP3136	✓		✓				
FRP3137	✓			✓		✉	
FRP3138						✗	✉
FRP3139						✗	✉
FRP3140	✉		✓			✓	
FRP3141	✓						
FRP3142	✓						
FRP3143	✉			✉		✗	✉
FRP3144	✓		✓	✗	✓	✗	✓
FRP3145			✉	✗	✉	✗	✓
FRP3146			✉				
FRP3147	✓			✓			
FRP3148	✓		✓				
FRP3149	✓		✓				
FRP3150							✉
FRP3151							
FRP3152							
FRP3153							

Part Number	DS2500 H	4300 C	DS3000 R	DS 1.11 W	DS 1.11 (THERMALLY BEDDED) WB	DSUNO Z	DSUNO (THERMALLY BEDDED) ZB
FRP3154				✉			
FRP3155							
FRP3156							✓
FRP3157							
FRP3158							
FRP5001			✉	✉			
FRP5002			✓	✉			

FERODO RACING

Updated on November 2020

✓ Available
✗ Out of Range
In Introduction
Exhausting
✉ Make to order

Equivalent Ferodo Pad Shapes

Part Number	DIMENSIONS	ALSO AVAILABLE			
	Length x Height x Thickness (mm) - Radial depth (mm)	Shape	Th. mm	Shape	Th. mm
FCP22	109.0 x 39.0 x 10.0 mm Rd=36.0 mm	**FCP29**	17,3		
FCP29	108.9 x 39.0 x 17.3 mm Rd=37.0 mm	**FCP22**	10		
FCP116	77.6 x 66.0 x 16.5 mm Rd=50.1 mm	**FCP1562**	14.5	**FRP3056**	14.5
FCP351	108.9 x 47.0 x 18.0 mm Rd=42.4 mm	**FCP360**	12		
FCP360	108.9 x 47.0 x 12.0 mm Rd=42.4 mm	**FCP351**	18		
FCP392	138.0 x 49.3 x 15.3 mm Rd=45.3 mm / 138.0 x 51.4 x 15.3 mm Rd=45.3 mm	**FCP419**	19.7		
FCP419	138.0 x 49.3 x 19.7 mm Rd=45.3 mm / 138.0 x 51.4 x 19.7 mm Rd=45.3 mm	**FCP392**	15.3		
FCP451	97.9 x 65.0 x 18.0 mm Rd=50.8 mm	**FRP3069**	16		
FCP541	87.4 x 52.9 x 15.0 mm Rd=40.8 mm	**FCP1491**	16		
FCP558	105.2 x 54.8 x 11.0 mm Rd=42.0 mm	**FCP881**	15		
FCP721	109.8 x 69.0 x 17.3 mm Rd=51.3 mm	**FCP1348**	15	**FRP3109**	12.5
FCP774	119.0 x 70.0 x 16.2 mm Rd=47.5 mm	**FCP775**	19.6		
FCP775	119.0 x 70.0 x 19.6 mm Rd=47.5 mm	**FCP774**	16.2		
FCP857	123.2 x 59.4 x 17.0 mm Rd=54.8 mm	**FCP1483**	17.2		
FCP878	126.0 x 59.0 x 14.6 mm Rd=41.0 mm	**FCP1560**	12.9		
FCP881	105.2 x 58.0 x 15.0 mm Rd=42.0 mm	**FCP558**	11		
FCP891	131.8 x 75.0 x 17.5 mm Rd=66.0 mm	**FRP3042**	26.5		
FCP905	148.8 x 57.0 x 18.5 mm Rd=50.5 mm	**FRP3062**	19.5		
FCP1281	131.8 x 67.0 x 18.0 mm Rd=51.7 mm	**FRP3028**	16		
FCP1289	119.0 x 69.0 x 19.9 mm Rd=47.5 mm	**FCP1312**	16		
FCP1312	119.0 x 69.0 x 16.0 mm Rd=47.2 mm	**FCP1289**	19.9		
FCP1334	131.8 x 77.2 x 16.0 mm Rd=61.0 mm	**FRP3067**	14.7		
FCP1348	109.8 x 69.0 x 15.0 mm Rd=51.3 mm	**FCP721**	17.3	**FRP3109**	12.5
FCP1399	137.0 x 50.8 x 19.0 mm Rd=42.9 mm	**FRP3146**	17.2		
FCP1483	123.0 x 59.4 x 17.2 mm Rd=59.4 mm	**FCP857**	17		
FCP1491	87.4 x 52.9 x 16.0 mm Rd=40.7 mm	**FCP541**	15		
FCP1560	126.0 x 59.0 x 12.9 mm Rd=41.0 mm	**FCP878**	14.6		
FCP1562	77.6 x 66.0 x 14.5 mm Rd=45.0 mm	**FRP3056**		**FCP116**	16.5
FCP1667	124.8 x 70.7 x 15.5 mm Rd=52.1 mm	**FCP4821**	13.8		
FCP4611	114.74 x 91.2 x 18.1 mm Rd=71.3 mm	**FCP4872**	15		
FCP4821	124.8 x 70.7 x 13.8 mm Rd=52.1 mm	**FCP1667**	15.5		
FCP4872	114.5 x 91.2 x 15 mm Rd=71.3 mm	**FCP4611**	18.1		
FCP4972	113.8 x 59 x 14.5 mm Rd=46.1 mm	**FRP3085**	16.2		
FRP212	132.4 x 56.0 x 20.3 mm Rd=50.3 mm	**FRP216**	17		
FRP216	132.4 x 56.0 x 17.0 mm Rd=50.3 mm	**FRP212**	20.3		
FRP302	131.8 x 62.2 x 20.0 mm Rd=49.0 mm	**FRP3007**	18	**FRP1078**	25
FRP308	99.8 x 46.0 x 20.0 mm Rd=43.6 mm	**FRP1079**	16		
FRP501	133.0 x 71.0 x 20.0 mm Rd=43.0 mm	**FRP3097**			
FRP1058	79.8 x 56.0 x 18.0 mm Rd=45.5 mm	**FRP1064**	20		
FRP1059	84.8 x 68.0 x 22.0 mm Rd=51.5 mm	**FRP3004**	20	**FRP3045**	18
FRP1060	152.0 x 77.0 x 25.0 mm Rd=45.0 mm	**FRP3000**	18		
FRP1064	79.8 x 56.0 x 20.0 mm Rd=45.5 mm	**FRP1058**	18		
FRP1077	131.8 x 62.2 x 16.0 mm Rd=49.0 mm	**FRP302**	20	**FRP3007**	18
FRP1078	131.8 x 62.2 x 25.0 mm Rd=49.0 mm	**FRP3007**	18	**FRP1077**	16
FRP1079	99.8 x 46.0 x 16.0 mm Rd=43.6 mm	**FRP308**	20		
FRP3000	152.0 x 77.0 x 18.0 mm Rd=45.0 mm	**FRP1060**	25		
FRP3003	152.1 x 80.0 x 18.0 mm Rd=54.0 mm	**FRP3015**	28.5	**FRP3145**	17
FRP3004	84.8 x 68.0 x 20.0 mm Rd=51.5 mm	**FRP3034**	21	**FRP1059**	22
FRP3007	131.8 x 62.2 x 18.0 mm Rd=49.0 mm	**FRP1077**	16	**FRP3156**	26.5
FRP3009	131.7 x 69.0 x 16.0 mm Rd=59.0 mm	**FRP3012**	20		
FRP3012	131.7 x 69.0 x 20.0 mm Rd=59.0 mm	**FRP3009**	16		
FRP3014	152.1 x 68.9 x 25.0 mm Rd=54.0 mm	**FRP3003**	18	**FRP3077**	17
FRP3015	152.1 x 68.9 x 28.5 mm Rd=54.0 mm	**FRP3145**	17	**FRP3003**	18
FRP3018	132.4 x 55.0 x 16.7 mm Rd=42.0 mm	**FRP3073**	20.3		
FRP3020	86.2 x 63.0 x 15.0 mm Rd=46.0 mm	**FRP3086**	18		
FRP3022	79.8 x 62.0 x 20.0 mm Rd=50.5 mm	**FRP3023**	17.5	**FRP3033**	21

Equivalent Ferodo Pad Shapes

Part Number	DIMENSIONS	ALSO AVAILABLE			
	Length x Height x Thickness (mm) - Radial depth (mm)	Shape	Th. mm	Shape	Th. mm
FRP3023	79.8 x 62.0 x 17.5 mm Rd=50.5 mm	**FRP3022**	20	**FRP3033**	21
FRP3024	139.8 x 61.4 x 20.0 mm Rd=48.4 mm	**FRP3029**	26	**FRP3087**	17.5
FRP3028	131.8 x 67.0 x 16.0 mm Rd=51.5 mm	**FCP1281**	18.2		
FRP3029	139.8 x 61.4 x 26.0 mm Rd=48.4 mm	**FRP3140**	16	**FRP3024**	20
FRP3030	139.8 x 61.4 x 28.0 mm Rd=48.4 mm	**FRP3087**	17.5	**FRP3029**	26
FRP3031	163.8 x 66.0 x 29.0 mm Rd=52.5 mm	**FRP3123**	21.5	**FRP3110**	25
FRP3032	131.8 x 61.0 x 16.0 mm Rd=42.5 mm	**FRP3070**	18		
FRP3033	79.8 x 62.0 x 21.0 mm Rd=50.5 mm	**FRP3022**	20	**FRP3023**	17.5
FRP3034	84.8 x 68.0 x 21.0 mm Rd=51.5 mm	**FRP3004**	20	**FRP1059**	22
FRP3037	163.1 x 69.0 x 28.0 mm Rd=54.0 mm	**FRP3055**	30	**FRP3039**	25
FRP3039	163.1 x 69.0 x 25.0 mm Rd=54.0 mm	**FRP3055**	30	**FRP3037**	28
FRP3042	131.8 x 75.0 x 26.5 mm Rd=66.0 mm	**FCP891**	17.5		
FRP3045	84.8 x 68.0 x 18.0 mm Rd=51.5 mm	**FRP3004**	20	**FRP1059**	22
FRP3054	152.0 x 80.0 x 18.0 mm Rd=51.0 mm	**FRP3076**	17	**FRP3061**	25
FRP3055	163.1 x 69.0 x 30.0 mm Rd=54.0 mm	**FRP3039**	25	**FRP3037**	28
FRP3056	77.6 x 66.0 x 14.5 mm Rd=50.1 mm	**FCP116**	16.5	**FCP1562**	
FRP3061	152.0 x 80.0 x 25.0 mm Rd=51.0 mm	**FRP3054**	18	**FRP3076**	17
FRP3062	148.8 x 57.0 x 19.5 mm Rd=50.5 mm	**FCP905**	18.5		
FRP3067	131.8 x 77.0 x 14.7 mm Rd=62.0 mm	**FCP1334**	16		
FRP3069	97.9 x 65.0 x 16.0 mm Rd=50.8 mm	**FCP451**	18		
FRP3070	132.0 x 61.0 x 18.0 mm Rd=42.5 mm	**FRP3032**	16		
FRP3073	132.4 x 55.0 x 20.3 mm Rd=42.0 mm	**FRP3018**	16.7		
FRP3075	190.4 x 101.0 x 17.5 mm Rd=63.5 mm	**FRP3096**	19		
FRP3076	152.0 x 80.0 x 17.0 mm Rd=50.0 mm	**FRP3054**	18	**FRP3061**	25
FRP3077	152.1 x 80.0 x 17.0 mm Rd=54.0 mm	**FRP3145**	17	**FRP3003**	18
FRP3080	164.0 x 66.0 x 27.8 mm Rd=50.5 mm	**FRP3157**	18		
FRP3081	152.0 x 63.0 x 16.0 mm Rd=51.0 mm	**FRP3142**			
FRP3083	130.3 x 81.0 x 16.9 mm Rd=55.0 mm	**FRP3107**			
FRP3085	113.8 x 59.0 x 16.2 mm Rd=46.1 mm	**FCP4972**	14.5		
FRP3086	86.2 x 63.0 x 18.0 mm Rd=46.0 mm	**FRP3020**	15		
FRP3087	139.8 x 61.4 x 17.5 mm Rd=48.4 mm	**FRP3029**	26	**FRP3140**	16
FRP3095	130.2 x 70.0 x 19.0 mm Rd=60.4 mm	**FRP3143**	17.0		
FRP3096	190.4 x 101.0 x 19.0 mm Rd=63.5 mm	**FRP3075**	17.5		
FRP3097	133.2 x 61.0 x 20.4 mm Rd=43.0 mm	**FRP3154**	16.5	**FRP501**	
FRP3106	189.8 x 92.9 x 18.8 mm Rd=65.0 mm	**FRP3133**	16.5		
FRP3107	130.3 x 78.0 x 16.9 mm Rd=50.0 mm	**FRP3083**			
FRP3109	109.8 x 69.0 x 12.5 mm Rd=51.3 mm	**FCP721**	17.3	**FCP1348**	15
FRP3110	163.8 x 66.0 x 25.0 mm Rd=52.5 mm	**FRP3031**	29	**FRP3123**	21.5
FRP3123	163.8 x 66.0 x 21.5 mm Rd=52.5 mm	**FRP3031**	29	**FRP3110**	25
FRP3128	163.5 x 76.0 x 25.0 mm Rd=61.5 mm	**FRP3153**	29		
FRP3131	163.9 x 74.7 x 28.0 mm Rd=62.0 mm	**FRP3150**	30		
FRP3133	189.8 x 92.9 x 16.5 mm Rd=65.0 mm	**FRP3106**	18.8		
FRP3140	139.8 x 61.4 x 16.0 mm Rd=48.4 mm	**FRP3029**	26	**FRP3087**	17.5
FRP3142	152.1 x 63.8 x 16.0 mm Rd=50.8 mm	**FRP3081**			
FRP3143	130.2 x 70.0 x 17.0 mm Rd=60.4 mm	**FRP3095**	19.0		
FRP3144	152.1 x 68.9 x 18.0 mm Rd=54.0 mm	**FRP3015**	28.5	**FRP3145**	17
FRP3145	152.1 x 68.9 x 17.0 mm Rd=54.0 mm	**FRP3015**	28.5	**FRP3144**	18
FRP3146	137.0 x 50.8 x 17.2 mm Rd=42.9 mm	**FCP1399**	19.0		
FRP3150	163.9 x 77.7 x 30 mm Rd=62 mm	**FRP3131**	28		
FRP3153	163.8 x 76.9 x 29 mm Rd=61.5 mm	**FRP3128**	25		
FRP3154	133.2 x 61 x 16.5 mm Rd=43 mm	**FRP3097**	20.4		
FRP3156	131.8 x 62.2 x 26.5 mm Rd=49 mm	**FRP302**	20	**FRP1078**	25
FRP3157	164 x 66 x 18 mm Rd=50.5 mm	**FRP3080**	27.8		

FERODO®

APPLICATIONS



FERODO®
RACING

	kW				NOTE			NOTE
ABARTH								
124 Spider								
1.4	125	01/16 →				FCP1894	SUMITOMO	
1.4	125	09/16 →	FCP4821	BREMBO				
500 / 595 / 695 (312_)								
1.4 (312.AXD1A)	99	08/08 →	FCP1467	BOSCH				
1.4 (312.AXD1A)	99	08/08 →				FCP1324	LUCAS/TRW	
1.4 (312.AXF11)	132	08/08 →	FCP1466	BOSCH				
1.4 (312.AXF11)	132	08/08 →	FCP1467	BOSCH				
1.4 (312.AXF11)	132	08/08 →	FCP1667	BREMBO				
1.4 (312.AXF11)	132	08/08 →				FCP1324	LUCAS/TRW	
1.4 (312.AXF11, 312.AXF1A, 312.AXD1A)	118	08/08 →	FCP1467	BOSCH				
1.4 (312.AXF11, 312.AXF1A, 312.AXD1A)	118	08/08 →				FCP1324	LUCAS/TRW	
1.4 (312.AXF11, 312.AXF1A, 312.AXD1A)	118	02/12 →	FCP4353	ATE				
1.4 (312.AXF1A)	103	05/10 →	FCP1466	BOSCH				
1.4 (312.AXF1A)	103	05/10 →	FCP1667	BREMBO				
1.4 (312.AXF1A)	103	05/10 →				FCP1324	LUCAS/TRW	
1.4 (312.AXT1A)	139	08/08 →	FCP1667	BREMBO				
1.4 (312.AXT1A)	139	08/08 →				FCP1324	LUCAS/TRW	
1.4 (312.AXY11, 312.AXY1A)	107	05/16 →	FCP1467	BOSCH				
1.4 (312.AXY11, 312.AXY1A)	107	05/16 →				FCP1324	LUCAS/TRW	
1.4 (312.AXZ11)	121	05/16 →	FCP1467	BOSCH				
1.4 (312.AXZ11)	121	05/16 →				FCP1324	LUCAS/TRW	
500C / 595C / 695C (312_)								
1.4 (312.AXD1A)	99	01/11 →	FCP1467	BOSCH				
1.4 (312.AXD1A)	99	01/11 →				FCP1324	LUCAS/TRW	
1.4 (312.AXF11)	132	09/09 →	FCP1466	BOSCH				
1.4 (312.AXF11)	132	09/09 →	FCP1467	BOSCH				
1.4 (312.AXF11)	132	09/09 →	FCP1667	BREMBO				
1.4 (312.AXF11)	132	09/09 →				FCP1324	LUCAS/TRW	
1.4 (312.AXF1A)	103	09/09 →	FCP1467	BOSCH				
1.4 (312.AXF1A)	103	09/09 →				FCP1324	LUCAS/TRW	
1.4 (312.AXF1A, 312.AXD1A)	118	05/11 →	FCP1467	BOSCH				
1.4 (312.AXF1A, 312.AXD1A)	118	05/11 →				FCP1324	LUCAS/TRW	
1.4 (312.AXY1A)	107	05/16 →	FCP1467	BOSCH				
1.4 (312.AXY1A)	107	05/16 →				FCP1324	LUCAS/TRW	
1.4 (312.AXZ1A)	121	05/16 →	FCP1467	BOSCH				
1.4 (312.AXZ1A)	121	05/16 →				FCP1324	LUCAS/TRW	
GRANDE PUNTO (199_)								
1.4 (199.AXN1B)	114	12/07 → 06/10	FCP1667	BREMBO				
1.4 (199.AXN1B)	114	12/07 → 06/10				FCP1858	BOSCH	
1.4 (199.AXX1B)	132	12/07 → 12/12	FCP1667	BREMBO				
1.4 (199.AXX1B)	132	12/07 → 12/12				FCP1858	BOSCH	
PUNTO (199_)								
1.4 (199.AXX1B)	120	04/10 → 02/12	FCP1667	BREMBO				
1.4 (199.AXX1B)	120	04/10 → 02/12				FCP1858	BOSCH	
1.4 (199.AXX1B)	132	05/08 → 02/12	FCP1667	BREMBO				
1.4 (199.AXX1B)	132	05/08 → 02/12				FCP1858	BOSCH	
Punto EVO (199)								
1.4 Supersport reg.	134	01/13 →	FCP1667	BREMBO				
RITMO (138A_)								
125 TC 2.0	92	11/81 → 12/87	FCP370	LUCAS/TRW				
130 TC 2.0	96	04/83 → 12/87	FCP370	LUCAS/TRW				
Strada								
2.0 130	96	06/84 → 06/87	FCP72	BENDIX				
2.0 130	96	06/84 → 06/87	FCP370	LUCAS/TRW				

For material availability see page 16-18 / Per la disponibilità materiali vedere a pagina 16-18

FERODO RACING
Updated on November 2020

	kW				NOTE			NOTE
AC								
428								
4.1		01/67 → 12/74	FCP9	LUCAS/TRW				
4.1		01/67 → 12/74				FCP815	LUCAS/TRW	
Ace								
5		01/93 →	FCP276	LUCAS/TRW				
Cobra								
7		01/63 → 12/75	FCP9	LUCAS/TRW				
7		01/63 → 12/75				FCP815	LUCAS/TRW	
ME 3000								
3.0 E,M	101	01/75 → 12/81	FCP167	LUCAS/TRW				
3.0 E,M	101	01/75 → 12/81				FCP815	LUCAS/TRW	
Superblower								
4.9		01/97 →	FRP216	BREMBO				
ACURA								
CL 4 cylinder								
2.2- 2.3 L		01/97 → 12/99	FCP761	AKEBONO				
CL 6 cylinder								
3.0 L		01/97 → 12/99	FCP905	AKEBONO				
Integra								
1.6-1.7-1.8 L		01/90 → 12/93	FCP748	AKEBONO				
1.6-1.8 L		01/94 → 12/01	FCP1436	AKEBONO				
Legend								
3.2 L		01/91 → 12/95	FCP905	AKEBONO				
Vigor								
2.0-2.5 L		01/94 →	FCP905	AKEBONO				
ALFA ROMEO								
145								
1.3 i	66	09/94 → 09/96	FCP370	LUCAS/TRW				
1.3 i	66	09/94 → 09/96				FCP1113	LUCAS/TRW	
1.4	66	09/94 → 09/96	FCP370	LUCAS/TRW				
1.4	66	09/94 → 09/96				FCP409	LUCAS/TRW	
1.4 Twin Spark 16V	76	10/96 → 02/99	FCP1056	ATE				
1.4 Twin Spark 16V	76	10/96 → 02/99				FCP409	LUCAS/TRW	
1.6	76	09/94 → 11/96	FCP370	LUCAS/TRW				
1.6	76	09/94 → 11/96				FCP409	LUCAS/TRW	
1.6 Twin Spark 16V	88	01/97 → 02/99	FCP1056	ATE				
1.6 Twin Spark 16V	88	01/97 → 02/99				FCP409	LUCAS/TRW	
1.7 16V	95	09/94 → 09/00	FCP370	LUCAS/TRW				
1.7 16V	95	09/94 → 09/00				FCP409	LUCAS/TRW	
1.8 Twin Spark 16V	103	01/95 → 02/99	FCP1056	ATE				
1.8 Twin Spark 16V	103	01/95 → 02/99				FCP409	LUCAS/TRW	
1.9 JTD	77	01/99 → 09/00	FCP1056	ATE				
1.9 JTD	77	01/99 → 09/00				FCP409	LUCAS/TRW	
1.9 TD	68	09/94 → 11/96	FCP370	LUCAS/TRW				
1.9 TD	68	09/94 → 11/96				FCP409	LUCAS/TRW	
1.9 TD	68	12/96 → 12/99	FCP1056	ATE				
1.9 TD	68	12/96 → 12/99				FCP409	LUCAS/TRW	
2.0 Twin Spark 16V	110	01/96 → 02/99	FCP1052	ATE				
2.0 Twin Spark 16V	110	01/96 → 02/99				FCP409	LUCAS/TRW	
146								
1.3 i	66	09/94 → 09/96	FCP370	LUCAS/TRW				
1.3 i	66	09/94 → 09/96				FCP1113	LUCAS/TRW	
1.4	66	09/94 → 09/96	FCP370	LUCAS/TRW				
1.4	66	09/94 → 09/96				FCP409	LUCAS/TRW	
1.4 Twin Spark 16V	76	01/96 → 02/99	FCP1056	ATE				
1.4 Twin Spark 16V	76	01/96 → 02/99				FCP409	LUCAS/TRW	
1.6	76	09/94 → 12/97	FCP370	LUCAS/TRW				
1.6	76	09/94 → 12/97				FCP409	LUCAS/TRW	
1.6 Twin Spark 16V	88	01/97 → 02/99	FCP1056	ATE				

For material availability see page 16-18 / Per la disponibilità materiali vedere a pagina 16-18

ALFA ROMEO

	kW				NOTE			NOTE
146								
1.6 Twin Spark 16V	88	01/97 → 02/99				FCP409	LUCAS/TRW	
1.7 16V	95	09/94 → 12/97	FCP370	LUCAS/TRW				
1.7 16V	95	09/94 → 12/97				FCP409	LUCAS/TRW	
1.7 16V	95	01/97 → 09/00	FCP370	LUCAS/TRW				
1.7 16V	95	01/97 → 09/00				FCP409	LUCAS/TRW	
1.8 Twin Spark 16V	103	01/95 → 02/99	FCP1056	ATE				
1.8 Twin Spark 16V	103	01/95 → 02/99				FCP409	LUCAS/TRW	
1.9 JTD	77	01/99 → 09/00	FCP1056	ATE				
1.9 JTD	77	01/99 → 09/00				FCP409	LUCAS/TRW	
1.9 TD	68	09/94 → 12/96	FCP370	LUCAS/TRW				
1.9 TD	68	09/94 → 12/96				FCP409	LUCAS/TRW	
1.9 TD	68	01/96 → 12/99	FCP1056	ATE				
1.9 TD	68	01/96 → 12/99				FCP409	LUCAS/TRW	
2.0 Twin Spark 16V	110	01/96 → 02/99	FCP1052	ATE				
2.0 Twin Spark 16V	110	01/96 → 02/99				FCP409	LUCAS/TRW	
147 (937)								
1.6 16V	88	01/01 → 03/10	FCP1134	ATE				
1.6 16V	88	01/01 → 03/10				FCP1349	LUCAS/TRW	
1.6 16V T.Spark Eco	77	01/01 → 03/10	FCP1052	ATE	For Vented brake disc			
1.6 16V T.Spark Eco	77	01/01 → 03/10	FCP1134	ATE	For Solid brake disc			
1.6 16V T.Spark Eco	77	01/01 → 03/10				FCP1349	LUCAS/TRW	
1.9 JTD	81	11/00 → 09/04	FCP1052	ATE				
1.9 JTD	81	11/00 → 09/04				FCP1349	LUCAS/TRW	
2.0 16V	110	10/00 →	FCP1052	ATE				
2.0 16V	110	10/00 →				FCP1349	LUCAS/TRW	
3.2 GTA	184	09/03 →	FCP1334	BREMBO				
155								
1.6 i Twin Spark 16V	88	01/96 → 12/97	FCP370	LUCAS/TRW				
1.6 i Twin Spark 16V	88	01/96 → 12/97				FCP409	LUCAS/TRW	
1.7 i Twin Spark	85	02/92 → 03/93	FCP370	LUCAS/TRW				
1.7 i Twin Spark	85	02/92 → 03/93				FCP409	LUCAS/TRW	
1.8 i Twin Spark	95	02/92 → 04/96	FCP370	LUCAS/TRW				
1.8 i Twin Spark	95	02/92 → 04/96				FCP409	LUCAS/TRW	
1.8 i Twin Spark	95	02/92 → 04/96				FCP596	LUCAS/TRW	
1.9 TD	66	02/92 → 12/97	FCP370	LUCAS/TRW				
1.9 TD	66	02/92 → 12/97				FCP409	LUCAS/TRW	
1.9 TD	66	02/92 → 12/97				FCP596	LUCAS/TRW	
2.0 Q4 (Turbo) 16V	137	02/92 → 12/95	FCP565	LUCAS/TRW				
2.0 Q4 (Turbo) 16V	137	02/92 → 12/95				FCP409	LUCAS/TRW	
2.0 Q4 (Turbo) 16V	137	02/92 → 12/95				FCP596	LUCAS/TRW	
2.0 Q4 (Turbo) 16V	137	01/95 → 03/96	FCP1052	ATE				
2.0 Q4 (Turbo) 16V	137	01/95 → 03/96				FCP409	LUCAS/TRW	
2.0 Q4 (Turbo) 16V	137	01/95 → 03/96				FCP596	LUCAS/TRW	
2.0 TD	66	02/92 → 12/97	FCP565	LUCAS/TRW				
2.0 TD	66	02/92 → 12/97				FCP409	LUCAS/TRW	
2.0 Twin Spark	104	02/92 → 12/95	FCP370	LUCAS/TRW				
2.0 Twin Spark	104	02/92 → 12/95				FCP409	LUCAS/TRW	
2.0 Twin Spark	104	02/92 → 12/95				FCP596	LUCAS/TRW	
2.0 Twin Spark 16V	110	01/95 → 12/97	FCP1052	ATE				
2.0 Twin Spark 16V	110	01/95 → 12/97				FCP409	LUCAS/TRW	
2.0 Twin Spark 16V	110	01/95 → 12/97				FCP596	LUCAS/TRW	
2.5 TD	92	04/93 → 12/94	FCP565	LUCAS/TRW				
2.5 TD	92	04/93 → 12/94				FCP409	LUCAS/TRW	
2.5 TD	92	01/95 → 12/97	FCP1052	ATE				
2.5 TD	92	01/95 → 12/97				FCP409	LUCAS/TRW	
2.5 V6	121	02/92 → 12/95	FCP565	LUCAS/TRW				
2.5 V6	121	02/92 → 12/95				FCP409	LUCAS/TRW	
2.5 V6	121	02/92 → 12/95				FCP596	LUCAS/TRW	
2.5 V6	121	01/95 → 12/97	FCP1052	ATE				
2.5 V6	121	01/95 → 12/97				FCP409	LUCAS/TRW	
2.5 V6	121	01/95 → 12/97				FCP596	LUCAS/TRW	
156 (932)								
1.6 i Twin Spark Saloon 16V	88	09/97 → 12/01	FCP1134	ATE				
1.6 i Twin Spark Saloon 16V	88	09/97 → 12/01				FCP995	LUCAS/TRW	
1.6 i Twin Spark Saloon 16V	88	01/02 → 09/05	FCP1134	ATE				
1.6 i Twin Spark Saloon 16V	88	01/02 → 09/05				FCP1349	LUCAS/TRW	
1.6 Twin Spark Sportwagon 16V	88	05/00 → 12/01	FCP1134	ATE				
1.6 Twin Spark Sportwagon 16V	88	05/00 → 12/01				FCP995	LUCAS/TRW	
1.6 Twin Spark Sportwagon 16V	88	01/02 → 05/06	FCP1134	ATE				
1.6 Twin Spark Sportwagon 16V	88	01/02 → 05/06				FCP1349	LUCAS/TRW	
1.8 i Twin Spark Saloon 16V	103	01/02 → 09/05	FCP1134	ATE				
1.8 i Twin Spark Saloon 16V	103	01/02 → 09/05				FCP1349	LUCAS/TRW	
1.8 Twin Spark Saloon 16V	103	01/97 → 12/01	FCP1134	ATE				
1.8 Twin Spark Saloon 16V	103	01/97 → 12/01				FCP995	LUCAS/TRW	

For material availability see page 16-18 / Per la disponibilità materiali vedere a pagina 16-18

FERODO RACING
Updated on November 2020

...ALFA ROMEO

	kW				NOTE				NOTE
...156 (932)									
1.8 Twin Spark Sportwagon 16V	103	10/00 → 12/01	**FCP1134**	ATE					
1.8 Twin Spark Sportwagon 16V	103	10/00 → 12/01				**FCP995**	LUCAS/TRW		
1.8 Twin Spark Sportwagon 16V	103	01/02 → 05/06	**FCP1134**	ATE					
1.8 Twin Spark Sportwagon 16V	103	01/02 → 05/06				**FCP1349**	LUCAS/TRW		
1.9 JTD Saloon	77	09/97 → 10/00	**FCP1134**	ATE					
1.9 JTD Saloon	77	09/97 → 10/00				**FCP995**	LUCAS/TRW		
1.9 JTD Saloon	81	10/00 → 05/01	**FCP1052**	ATE					
1.9 JTD Saloon	81	10/00 → 05/01	**FCP1134**	ATE					
1.9 JTD Saloon	81	10/00 → 05/01				**FCP1349**	LUCAS/TRW		
1.9 JTD Saloon	85	05/01 → 12/01	**FCP1052**	ATE					
1.9 JTD Saloon	85	05/01 → 12/01				**FCP995**	LUCAS/TRW		
1.9 JTD Saloon	85	01/02 → 09/05	**FCP1134**	ATE					
1.9 JTD Saloon	85	01/02 → 09/05				**FCP1349**	LUCAS/TRW		
1.9 JTD Saloon 16v	103	11/02 → 09/05	**FCP1052**	ATE					
1.9 JTD Saloon 16v	103	11/02 → 09/05	**FCP1134**	ATE					
1.9 JTD Saloon 16v	103	11/02 → 09/05				**FCP1349**	LUCAS/TRW		
1.9 JTD Sportwagon	77	05/00 → 10/00	**FCP1134**	ATE					
1.9 JTD Sportwagon	77	05/00 → 10/00				**FCP995**	LUCAS/TRW		
1.9 JTD Sportwagon	81	10/00 → 05/01	**FCP1052**	ATE					
1.9 JTD Sportwagon	81	10/00 → 05/01	**FCP1134**	ATE					
1.9 JTD Sportwagon	81	10/00 → 05/01				**FCP1349**	LUCAS/TRW		
1.9 JTD Sportwagon	85	05/01 → 12/01	**FCP1052**	ATE					
1.9 JTD Sportwagon	85	05/01 → 12/01				**FCP995**	LUCAS/TRW		
1.9 JTD Sportwagon	85	01/02 → 05/06	**FCP1134**	ATE					
1.9 JTD Sportwagon	85	01/02 → 05/06				**FCP1349**	LUCAS/TRW		
1.9 JTD Sportwagon 16v	103	11/02 → 05/06	**FCP1052**	ATE					
1.9 JTD Sportwagon 16v	103	11/02 → 05/06	**FCP1134**	ATE					
1.9 JTD Sportwagon 16v	103	11/02 → 05/06				**FCP1349**	LUCAS/TRW		
2.0 i Twin Spark Saloon 16V	110	01/02 → 03/02	**FCP1052**	ATE					
2.0 i Twin Spark Saloon 16V	110	01/02 → 03/02				**FCP1349**	LUCAS/TRW		
2.0 i Twin Spark Sportwagon 16V	114	05/00 → 10/00	**FCP1052**	ATE					
2.0 i Twin Spark Sportwagon 16V	114	05/00 → 10/00				**FCP995**	LUCAS/TRW		
2.0 Twin Spark Saloon 16V	114	01/97 → 10/00	**FCP1052**	ATE					
2.0 Twin Spark Saloon 16V	114	01/97 → 10/00				**FCP995**	LUCAS/TRW		
2.0 Twin Spark Sportwagon 16V	110	01/02 → 03/02	**FCP1052**	ATE					
2.0 Twin Spark Sportwagon 16V	110	01/02 → 03/02				**FCP1349**	LUCAS/TRW		
2.4 JTD Saloon	100	01/97 → 10/00	**FCP1052**	ATE					
2.4 JTD Saloon	100	01/97 → 10/00				**FCP995**	LUCAS/TRW		
2.4 JTD Saloon	100	01/02 → 09/05	**FCP1052**	ATE					
2.4 JTD Saloon	100	01/02 → 09/05				**FCP1349**	LUCAS/TRW		
2.4 JTD Sportwagon	100	05/00 → 10/00	**FCP1052**	ATE					
2.4 JTD Sportwagon	100	05/00 → 10/00				**FCP995**	LUCAS/TRW		
2.4 JTD Sportwagon	103	01/02 → 05/06	**FCP1052**	ATE					
2.4 JTD Sportwagon	103	01/02 → 05/06				**FCP1349**	LUCAS/TRW		
2.5 i V6 Saloon 24V	140	05/00 → 10/00	**FCP1052**	ATE					
2.5 i V6 Saloon 24V	140	05/00 → 10/00				**FCP995**	LUCAS/TRW		
2.5 i V6 Saloon 24V	141	01/02 → 09/05	**FCP1052**	ATE					
2.5 i V6 Saloon 24V	141	01/02 → 09/05				**FCP1349**	LUCAS/TRW		
2.5 V6 Saloon 24V	140	01/97 → 12/01	**FCP1052**	ATE					
2.5 V6 Saloon 24V	140	01/97 → 12/01				**FCP995**	LUCAS/TRW		
2.5 V6 Sportwagon 24V	141	01/02 → 05/06	**FCP1052**	ATE					
2.5 V6 Sportwagon 24V	141	01/02 → 05/06				**FCP1349**	LUCAS/TRW		
3.2 GTA	184	03/02 → 08/03	**FCP721**	BREMBO					
3.2 GTA	184	09/03 →	**FCP1334**	BREMBO					
3.2 Sportwagon GTA	184	09/03 →	**FCP1334**	BREMBO					
159 (939)									
1.8 TBi	147	05/09 → 11/11	**FCP1334**	BREMBO					
1.8 TBi	147	05/09 → 11/11				**FCP1795**	LUCAS/TRW		
1.9 1.9 JTS	160	09/05 →	**FCP1805**	ATE					
1.9 JTDM 16V	110	09/05 → 11/11	**FCP1805**	ATE					
1.9 JTDM 8V	88	09/05 → 11/11	**FCP1805**	ATE					
2.2 2.2 JTS	185	09/05 →	**FCP1805**	ATE					
2.4 JTDM	147	09/05 → 11/11	**FCP1334**	BREMBO					
2.4 JTDM	147	09/05 → 11/11				**FCP1795**	LUCAS/TRW		
2.4 JTDM	154	05/07 → 11/11	**FCP1334**	BREMBO					
2.4 JTDM	154	05/07 → 11/11				**FCP1795**	LUCAS/TRW		
2.4 JTDM Q4	154	05/07 → 11/11	**FCP1334**	BREMBO					
2.4 JTDM Q4	154	05/07 → 11/11				**FCP1795**	LUCAS/TRW		
3.2 JTS	191	09/05 →	**FRP3067**	BREMBO					
3.2 JTS	191	02/08 → 11/11	**FCP1334**	BREMBO					
3.2 JTS	191	02/08 → 11/11				**FCP1795**	LUCAS/TRW		
3.2 JTS Q4	191	12/05 → 11/11	**FCP1334**	BREMBO					
3.2 JTS Q4	191	12/05 → 11/11				**FCP1795**	LUCAS/TRW		
3.2 V6 GTS		09/05 →	**FRP3067**	BREMBO					

For material availability see page 16-18 / Per la disponibilità materiali vedere a pagina 16-18

...ALFA ROMEO	kW				NOTE			NOTE
159 (939_)								
1.8 MPI	103	03/07 → 11/11	**FCP1805**	ATE				
1.9 JTDM 16V	100	09/05 → 11/11	**FCP1805**	ATE				
1.9 JTDM 8V	85	09/05 → 11/11	**FCP1805**	ATE				
159 Sportwagon (939)								
1.8 TBi	147	05/09 → 11/11	**FCP1334**	BREMBO				
1.8 TBi	147	05/09 → 11/11				**FCP1795**	LUCAS/TRW	
2.4 JTDM	147	03/06 → 11/11	**FCP1334**	BREMBO				
2.4 JTDM	147	03/06 → 11/11				**FCP1795**	LUCAS/TRW	
2.4 JTDM	154	05/07 → 11/11	**FCP1334**	BREMBO				
2.4 JTDM	154	05/07 → 11/11				**FCP1795**	LUCAS/TRW	
2.4 JTDM Q4	154	05/07 → 11/11	**FCP1334**	BREMBO				
2.4 JTDM Q4	154	05/07 → 11/11				**FCP1795**	LUCAS/TRW	
3.2 JTS	191	02/08 → 11/11	**FCP1334**	BREMBO				
3.2 JTS	191	02/08 → 11/11				**FCP1795**	LUCAS/TRW	
3.2 JTS Q4	191	03/06 → 11/11	**FCP1334**	BREMBO				
3.2 JTS Q4	191	03/06 → 11/11				**FCP1795**	LUCAS/TRW	
159 Sportwagon (939_)								
1.8 MPI	103	03/07 → 11/11	**FCP1805**	ATE				
1.9 JTDM 16V	100	03/06 → 11/11	**FCP1805**	ATE				
1.9 JTDM 16V	110	03/06 → 11/11	**FCP1334**	BREMBO	For TI equipment only			
1.9 JTDM 16V	110	03/06 → 11/11	**FCP1805**	ATE				
1.9 JTDM 8V	85	03/06 → 11/11	**FCP1805**	ATE				
1.9 JTDM 8V	88	03/06 → 11/11	**FCP1805**	ATE				
1.9 JTS	118	03/06 → 11/11	**FCP1805**	ATE				
2.2 JTS	136	03/06 → 11/11	**FCP1334**	BREMBO	For TI equipment only			
2.2 JTS	136	03/06 → 11/11	**FCP1805**	ATE				
164								
2.0 (Turbo)	148	01/92 → 02/95	**FCP565**	LUCAS/TRW				
2.0 (Turbo)	148	01/92 → 02/95				**FCP596**	LUCAS/TRW	
2.0 (Turbo)	150	07/87 → 12/92	**FCP565**	LUCAS/TRW				
2.0 (Turbo)	150	07/87 → 12/92				**FCP596**	LUCAS/TRW	
2.0 Twin Spark	106	07/87 → 06/89				**FCP596**	LUCAS/TRW	
2.5 TD	86	07/87 → 12/92	**FCP565**	LUCAS/TRW				
2.5 TD	86	07/87 → 12/92				**FCP596**	LUCAS/TRW	
2.5 TD	92	01/92 → 02/95	**FCP565**	LUCAS/TRW				
2.5 TD	92	01/92 → 02/95				**FCP596**	LUCAS/TRW	
2.5 V6	120	09/92 → 12/98	**FCP565**	LUCAS/TRW				
2.5 V6	120	09/92 → 12/98				**FCP596**	LUCAS/TRW	
3.0 V6 24V	132	01/92 → 02/95	**FCP565**	LUCAS/TRW				
3.0 V6 24V	132	01/92 → 02/95				**FCP596**	LUCAS/TRW	
3.0 V6 24V	141	07/87 → 12/92	**FCP565**	LUCAS/TRW				
3.0 V6 24V	141	07/87 → 12/92				**FCP596**	LUCAS/TRW	
166 (936)								
2.0 Twin Spark 16V	114	08/98 → 10/00				**FCP995**	LUCAS/TRW	
2.0 V6 (Turbo)	151	08/98 → 10/00	**FCP1334**	BREMBO				
2.0 V6 (Turbo)	151	08/98 → 10/00				**FCP995**	LUCAS/TRW	
2.4 JTD	100	08/98 → 10/00				**FCP995**	LUCAS/TRW	
2.4 JTD 20V	129	10/03 → 06/07	**FCP1334**	BREMBO				
2.4 JTD 20V	129	10/03 → 06/07				**FCP995**	LUCAS/TRW	
2.5 24V	140	08/98 → 10/00	**FCP1334**	BREMBO				
2.5 24V	140	08/98 → 10/00				**FCP995**	LUCAS/TRW	
3.0 24V	166	08/98 → 10/00	**FCP1334**	BREMBO				
3.0 24V	166	08/98 → 10/00				**FCP995**	LUCAS/TRW	
3.2 i V6 24V	176	10/03 → 06/07	**FCP1334**	BREMBO				
3.2 i V6 24V	176	10/03 → 06/07				**FCP995**	LUCAS/TRW	
1750								
1.7 GT	80	01/68 → 05/72	**FCP11**	ATE				
1.7 GT	80	01/68 → 05/72				**FCP3**	ATE	
2000								
2.0	97	06/71 → 12/83	**FCP11**	ATE				
2.0	97	06/71 → 12/83				**FCP3**	ATE	
33								
1.2	50	05/83 → 08/89	**FCP72**	BENDIX				
1.2	50	05/83 → 08/89	**FCP441**	ATE				
1.2	50	05/83 → 08/89				**FCP409**	LUCAS/TRW	
1.2	50	08/89 → 12/94	**FCP546**	ATE				
1.2	50	08/89 → 12/94	**FCP647**	LUCAS/TRW				
1.3	63	05/83 → 07/89	**FCP72**	BENDIX				
1.3	63	05/83 → 07/89	**FCP441**	ATE				

For material availability see page 16-18 / Per la disponibilità materiali vedere a pagina 16-18

FERODO RACING
Updated on November 2020

...ALFA ROMEO	kW				NOTE			NOTE
...33								
1.3	63	05/83 → 07/89				FCP409	LUCAS/TRW	
1.3	63	08/89 → 12/94	FCP546	ATE				
1.3	63	08/89 → 12/94	FCP647	LUCAS/TRW				
1.4	65	08/89 → 12/94	FCP546	ATE				
1.4	65	08/89 → 12/94	FCP647	LUCAS/TRW				
1.5	72	08/89 → 12/94	FCP546	ATE				
1.5	72	08/89 → 12/94	FCP647	LUCAS/TRW	ABS			
1.5	72	08/89 → 12/94				FCP409	LUCAS/TRW	ABS
1.5	62	05/83 → 07/89	FCP72	BENDIX				
1.5	62	05/83 → 07/89	FCP441	ATE				
1.5	62	05/83 → 07/89				FCP409	LUCAS/TRW	
1.5	70	05/83 → 07/89	FCP72	BENDIX				
1.5	70	05/83 → 07/89	FCP441	ATE				
1.5	70	05/83 → 07/89				FCP409	LUCAS/TRW	
1.5	77	05/83 → 07/89	FCP72	BENDIX				
1.5	77	05/83 → 07/89	FCP441	ATE				
1.5	77	05/83 → 07/89				FCP409	LUCAS/TRW	
1.7	84	01/86 → 08/90	FCP546	ATE				
1.7	84	01/86 → 08/90				FCP596	LUCAS/TRW	ABS
1.7	79	08/90 → 12/94	FCP546	ATE				
1.7	79	08/90 → 12/94	FCP647	LUCAS/TRW				
1.7	79	08/90 → 12/94				FCP409	LUCAS/TRW	ABS
1.7 4x4	77	01/86 → 12/89	FCP546	ATE				
1.7 4x4	79	08/90 → 12/94	FCP546	ATE				
1.7 4x4	79	08/90 → 12/94	FCP647	LUCAS/TRW				
1.7 4x4	79	08/90 → 12/94				FCP409	LUCAS/TRW	ABS
1.7 4x4 16V	97	08/90 → 12/94	FCP546	ATE				
1.7 4x4 16V	97	08/90 → 12/94	FCP647	LUCAS/TRW				
1.7 4x4 16V	97	08/90 → 12/94				FCP409	LUCAS/TRW	ABS
1.7 Boxer 16V	79, 97	08/90 → 12/94	FCP546	ATE				
1.7 Boxer 16V	79, 97	08/90 → 12/94	FCP647	LUCAS/TRW				
1.7 Boxer 16V	79, 97	08/90 → 12/94				FCP409	LUCAS/TRW	
1.8 TD	53	01/86 → 07/90	FCP441	ATE				
1.8 TD	62	08/90 → 12/94	FCP546	ATE				
1.8 TD	62	08/90 → 12/94	FCP647	LUCAS/TRW				
1.8 TD	62	08/90 → 12/94				FCP409	LUCAS/TRW	ABS
4C (960)								
1.8 TBi	177	03/13 →	FCP1667	BREMBO				
1.8 TBi	177	03/13 →				FCP1795	LUCAS/TRW	
6								
2.5	110, 116	01/79 → 12/87				FCP2	ATE	
75								
1.6	81	09/90 → 12/92	FCP2	ATE				
1.6	81	09/90 → 12/92				FCP93	ATE	
1.6	81	05/85 → 09/90	FCP2	ATE				
1.6	81	05/85 → 09/90				FCP3	ATE	
1.8	88	09/90 → 12/92	FCP2	ATE				
1.8	88	09/90 → 12/92				FCP93	ATE	
1.8	88	05/85 → 09/90	FCP2	ATE				
1.8	88	05/85 → 09/90				FCP3	ATE	
1.8 (Turbo)	114	10/90 → 12/92	FCP448	ATE				
1.8 (Turbo)	114	10/90 → 12/92				FCP93	ATE	
1.8 (Turbo)	110	09/86 → 08/89	FCP448	ATE				
1.8 (Turbo)	110	09/86 → 08/89				FCP3	ATE	
1.8 (Turbo)	114	05/85 → 09/90	FCP448	ATE				
1.8 (Turbo)	114	05/85 → 09/90				FCP3	ATE	
2.0	96	09/90 → 12/92	FCP2	ATE				
2.0	96	09/90 → 12/92				FCP93	ATE	
2.0	96	01/89 → 09/90	FCP2	ATE				
2.0	96	01/89 → 09/90				FCP3	ATE	
2.0 Twin Spark	107	09/90 → 12/92	FCP448	ATE				
2.0 Twin Spark	107	09/90 → 12/92				FCP93	ATE	
2.0 Twin Spark, Veloce	107	05/85 → 09/90	FCP448	ATE				
2.0 Twin Spark, Veloce	107	05/85 → 09/90				FCP3	ATE	
2.4 TD	81	09/90 → 12/92	FCP448	ATE				
2.4 TD	81	09/90 → 12/92				FCP93	ATE	
2.4 TD	81	09/85 → 09/90	FCP448	ATE				
2.4 TD	81	09/85 → 09/90				FCP3	ATE	
2.5	113, 118	09/90 → 12/92	FCP448	ATE				
2.5	113, 118	09/90 → 12/92				FCP93	ATE	
2.5	113, 118	01/89 → 09/90	FCP448	ATE				
2.5	113, 118	01/89 → 09/90				FCP3	ATE	
3.0	136, 138	09/90 → 12/92	FCP448	ATE				
3.0	136, 138	09/90 → 12/92				FCP93	ATE	

For material availability see page 16-18 / Per la disponibilità materiali vedere a pagina 16-18

...ALFA ROMEO										
		kW				NOTE				NOTE
...75										
3.0	136, 138	01/89 → 09/90	FCP448	ATE						
3.0	136, 138	01/89 → 09/90					FCP3	ATE		
90										
2.5	116	09/84 → 12/87	FCP448	ATE						
2.5	116	09/84 → 12/87					FCP3	ATE		
2.5	116	01/87 → 12/92	FCP448	ATE						
2.5	116	01/87 → 12/92					FCP3	ATE		
3.0		09/87 → 12/92	FCP565	LUCAS/TRW						
3.0		09/87 → 12/92					FCP3	ATE		
Alfasud										
1.2	50	01/86 → 12/89	FCP546	ATE						
1.3		01/86 → 12/87	FCP546	ATE						
1.3		01/88 → 12/89	FCP546	ATE						
1.4	57	01/86 → 12/89	FCP546	ATE						
1.5		01/86 → 12/87	FCP546	ATE						
1.5		01/88 → 12/89	FCP546	ATE						
Alfetta										
1.6	80	07/72 → 12/78	FCP2	ATE						
1.6	80	07/72 → 12/78					FCP93	ATE		
1.6	80	01/79 → 12/82	FCP2	ATE						
1.6	80	01/79 → 12/82					FCP93	ATE		
1.6	80	01/83 → 12/85	FCP2	ATE						
1.6	80	01/83 → 12/85					FCP3	ATE		
1.8	90	07/72 → 12/78	FCP2	ATE						
1.8	90	07/72 → 12/78					FCP93	ATE		
1.8	90	01/79 → 12/82	FCP2	ATE						
1.8	90	01/79 → 12/82					FCP93	ATE		
1.8	90	01/83 → 12/85	FCP2	ATE						
1.8	90	01/83 → 12/85					FCP3	ATE		
2.0		07/72 → 12/78	FCP2	ATE						
2.0		07/72 → 12/78					FCP93	ATE		
2.0		01/79 → 12/82	FCP2	ATE						
2.0		01/79 → 12/82					FCP93	ATE		
2.0	96	01/83 → 12/85	FCP2	ATE						
2.0	96	01/83 → 12/85					FCP3	ATE		
2.0 TD	60	01/83 → 12/85	FCP2	ATE						
2.0 TD	60	01/80 → 12/83	FCP2	ATE						
2.0 TD	60	01/80 → 12/83					FCP3	ATE		
2.4 TD	81	01/80 → 12/85	FCP2	ATE						
2.4 TD	81	01/80 → 12/85					FCP3	ATE		
2.5 GTV6	116	01/80 → 12/83	FCP116	ATE						
2.5 GTV6	116	01/80 → 12/83					FCP93	ATE		
2.5 GTV6	116	01/84 → 12/87	FCP2	ATE						
2.5 GTV6	116	01/84 → 12/87					FCP3	ATE		
Arna										
1.2	46	01/83 → 08/85	FCP72	BENDIX						
1.2	46	01/83 → 08/85	FCP441	ATE						
1.2	46	08/85 → 12/87	FCP441	ATE						
1.3	57	01/83 → 08/85	FCP72	BENDIX						
1.3	57	01/83 → 08/85	FCP441	ATE						
1.3	57	08/85 → 12/87	FCP441	ATE						
1.5	77	01/83 → 08/85	FCP72	BENDIX						
1.5	77	01/83 → 08/85	FCP441	ATE						
1.5	77	08/85 → 12/87	FCP441	ATE						
Brera										
1.8 TBi	147	05/09 →	FCP1334	BREMBO						
1.8 TBi	147	05/09 →					FCP1795	LUCAS/TRW		
2.2 2.2 JTS	185	01/06 →	FCP1805	ATE						
2.4 JTDM 20V	147	01/06 →	FCP1334	BREMBO						
2.4 JTDM 20V	147	01/06 →					FCP1795	LUCAS/TRW		
2.4 JTDM 20V	154	05/07 →	FCP1334	BREMBO						
2.4 JTDM 20V	154	05/07 →					FCP1795	LUCAS/TRW		
3.2 JTS	191	03/08 →	FCP1334	BREMBO						
3.2 JTS	191	03/08 →					FCP1795	LUCAS/TRW		
3.2 JTS Q4	191	01/06 →	FCP1334	BREMBO						
3.2 JTS Q4	191	01/06 →					FCP1795	LUCAS/TRW		

For material availability see page 16-18 / Per la disponibilità materiali vedere a pagina 16-18

FERODO RACING
Updated on November 2020



kW

...ALFA ROMEO

Giulia									
1.3	64	01/66 → 12/85	**FCP2**	ATE					
1.3	64	01/66 → 12/85				**FCP3**	ATE		
1.6	75	01/66 → 12/85	**FCP2**	ATE					
1.6	75	01/66 → 12/85				**FCP3**	ATE		
2.0 D		01/76 → 12/78	**FCP2**	ATE					
2.0 D		01/76 → 12/78				**FCP3**	ATE		
Giulia (952_)									
2.9	383	11/19 →	**FRP3100**	BREMBO					
2.9 Quadrifoglio	375	10/15 →	**FRP3100**	BREMBO					
Giulietta									
1.3	70	11/77 → 12/82	**FCP2**	ATE					
1.3	70	11/77 → 12/82				**FCP93**	ATE		
1.3	70	01/83 → 03/86	**FCP2**	ATE					
1.3	70	01/83 → 03/86				**FCP3**	ATE		
1.6	80	11/77 → 12/82	**FCP2**	ATE					
1.6	80	11/77 → 12/82				**FCP93**	ATE		
1.6	80	01/83 → 03/86	**FCP2**	ATE					
1.6	80	01/83 → 03/86				**FCP3**	ATE		
1.8	88	11/77 → 12/82	**FCP2**	ATE					
1.8	88	11/77 → 12/82				**FCP93**	ATE		
1.8	88	01/83 → 03/86	**FCP2**	ATE					
1.8	88	01/83 → 03/86				**FCP3**	ATE		
2.0	96	11/77 → 12/82	**FCP2**	ATE					
2.0	96	11/77 → 12/82				**FCP93**	ATE		
2.0	96	01/83 → 03/86	**FCP2**	ATE					
2.0	96	01/83 → 03/86				**FCP3**	ATE		
2.0 TD	125	01/83 → 12/85	**FCP2**	ATE					
2.0 TD	125	01/83 → 12/85				**FCP3**	ATE		
GIULIETTA (940_)									
1.4 BiFuel	88	12/11 →	**FCP1334**	BREMBO	for vehicles with sports package				
1.4 BiFuel	88	12/11 →				**FCP4308**	LUCAS/TRW	For vehicles without Sport package	
1.4 TB	110	09/14 →	**FCP1334**	BREMBO	For vehicles with Sport package				
1.4 TB	110	09/14 →	**FCP1805**	ATE	For vehicles without Sport package				
1.4 TB	110	09/14 →				**FCP4308**	LUCAS/TRW	For vehicles without Sport package	
1.4 TB	120	04/10 →	**FCP1805**	ATE					
1.4 TB	120	04/10 →				**FCP4308**	LUCAS/TRW	For vehicles without Sport package	
1.4 TB	125	04/10 →	**FCP1805**	ATE					
1.4 TB	125	04/10 →				**FCP4308**	LUCAS/TRW	For vehicles without Sport package	
1.4 TB	77	04/11 →	**FCP1334**	BREMBO	For vehicles with Sport package				
1.4 TB	77	04/11 →	**FCP1805**	ATE					
1.4 TB	77	04/11 →				**FCP4308**	LUCAS/TRW	For vehicles without Sport package	
1.4 TB	85	04/10 →	**FCP1334**	BREMBO	For vehicles with Sport package				
1.4 TB	85	04/10 →				**FCP1795**	LUCAS/TRW	For vehicles with Sport package	
1.4 TB	85	04/10 →				**FCP4308**	LUCAS/TRW	For vehicles without Sport package	
1.4 TB (940FXA1A)	88	04/10 →	**FCP1334**	BREMBO	For vehicles with Sport package				
1.4 TB (940FXA1A)	88	04/10 →				**FCP1795**	LUCAS/TRW	For vehicles with Sport package	
1.4 TB (940FXA1A)	88	04/10 →				**FCP4308**	LUCAS/TRW	For vehicles without Sport package	
1.6 JTDM (940.FYB1_)	88	02/15 →	**FCP1334**	BREMBO	For vehicles with Sport package				
1.6 JTDM (940.FYB1_)	88	02/15 →				**FCP4308**	LUCAS/TRW	For vehicles without Sport package	
1.6 JTDM (940.FYE1_)	85	09/15 →	**FCP1334**	BREMBO	For vehicles with Sport package				
1.6 JTDM (940.FYE1_)	85	09/15 →				**FCP4308**	LUCAS/TRW	For vehicles without Sport package	
1.6 JTDM (940FXD1A)	77	04/10 →	**FCP1334**	BREMBO	For vehicles with Sport package				
1.6 JTDM (940FXD1A)	77	04/10 →				**FCP1795**	LUCAS/TRW	For vehicles with Sport package	
1.6 JTDM (940FXD1A)	77	04/10 →				**FCP4308**	LUCAS/TRW	For vehicles without Sport package	
1.8 TBi	173	04/10 →	**FCP1334**	BREMBO					
2.0 JTDM	100	04/10 →	**FCP1334**	BREMBO	for vehicles with sports package				
2.0 JTDM	100	04/10 →				**FCP4308**	LUCAS/TRW	For vehicles without Sport package	
2.0 JTDM	103	04/10 →	**FCP1805**	ATE					
2.0 JTDM	103	04/10 →				**FCP4308**	LUCAS/TRW	For vehicles without Sport package	
2.0 JTDM	120	04/10 →	**FCP1805**	ATE					
2.0 JTDM	120	04/10 →				**FCP4308**	LUCAS/TRW	For vehicles without Sport package	
2.0 JTDM	125	04/10 →	**FCP1805**	ATE					
2.0 JTDM	125	04/10 →				**FCP4308**	LUCAS/TRW	For vehicles without Sport package	
2.0 JTDM	129	11/13 →	**FCP1334**	BREMBO	For vehicles with Sport package				
2.0 JTDM	129	11/13 →				**FCP4308**	LUCAS/TRW	For vehicles without Sport package	
2.0 JTDM (940.FYC1A, 940.FXQ1A)	110	08/13 →	**FCP1334**	BREMBO	For vehicles with Sport package				
2.0 JTDM (940.FYC1A, 940.FXQ1A)	110	08/13 →				**FCP4308**	LUCAS/TRW	For vehicles without Sport package	
GT									
SPRINT 1600		01/63 → 12/66	**FCP11**	ATE					
SPRINT 1600		01/63 → 12/66				**FCP3**	ATE		

For material availability see page 16-18 / Per la disponibilità materiali vedere a pagina 16-18



kW



!





!

...ALFA ROMEO

					NOTE			NOTE
GT (937)								
1.9 JTD Multijet		01/04 →	**FCP1052**	ATE				
1.9 JTD Multijet		01/04 →				**FCP1349**	LUCAS/TRW	
3.2 GTA	176	11/03 →	**FCP1334**	BREMBO				
3.2 GTA	176	11/03 →				**FCP1349**	LUCAS/TRW	
GTV								
2.0		01/76 → 02/86	**FCP2**	ATE				
2.0		01/76 → 02/86				**FCP93**	ATE	
2.0		03/86 → 12/87	**FCP2**	ATE				
2.0		03/86 → 12/87				**FCP3**	ATE	
2.0 (Turbo)	147	05/95 →	**FCP565**	LUCAS/TRW				
2.0 (Turbo)	147	05/95 →	**FCP1052**	ATE				
2.0 (Turbo)	147	05/95 →				**FCP409**	LUCAS/TRW	
2.0 16V	110	05/95 →	**FCP565**	LUCAS/TRW				
2.0 16V	110	05/95 →	**FCP1052**	ATE				
2.0 16V	110	05/95 →				**FCP409**	LUCAS/TRW	
2.5	110, 114	10/79 → 12/87	**FCP116**	ATE				
2.5	110, 114	10/79 → 12/87				**FCP93**	ATE	
3.0 24V	162	12/96 →	**FCP565**	LUCAS/TRW				
3.0 24V	162	12/96 →	**FCP721**	BREMBO				
3.0 24V	162	12/96 →				**FCP409**	LUCAS/TRW	
3.0 24V	162	12/96 →				**FCP1113**	LUCAS/TRW	
6 2.5	116	11/80 → 02/87	**FCP448**	BREMBO				
6 2.5	116	11/80 → 02/87				**FCP93**	ATE	
MITO (955_)								
1.4 Turbo MultiAir	99	10/09 → 07/10	**FCP1468**	BOSCH	until chassis n:1096215			
1.4 Turbo MultiAir	99	10/09 → 07/10				**FCP1469**	BOSCH	
MiTo(955)								
0.9	63	07/11 →	**FCP1466**	BOSCH				
0.9	63	07/11 →				**FCP1349**	LUCAS/TRW	
1.3 JTDm	62	01/11 →	**FCP1468**	BOSCH				
1.3 JTDm	62	01/11 →				**FCP1469**	BOSCH	
1.3 JTDm	66	09/08 →	**FCP1468**	BOSCH				
1.3 JTDm	66	09/08 →				**FCP1469**	BOSCH	
1.3 JTDm	70	09/08 → 07/10	**FCP1468**	BOSCH	until chassis n:1096215			
1.3 JTDm	70	09/08 → 07/10				**FCP1469**	BOSCH	
1.4	51	05/11 →	**FCP1466**	BOSCH				
1.4	51	05/11 →				**FCP1349**	LUCAS/TRW	
1.4	57	03/11 →	**FCP1466**	BOSCH				
1.4	57	03/11 →				**FCP1349**	LUCAS/TRW	
1.4	58	09/08 →	**FCP1466**	BOSCH				
1.4	58	09/08 →				**FCP1469**	BOSCH	
1.4	70	09/08 →	**FCP1466**	BOSCH				
1.4	70	09/08 →				**FCP1469**	BOSCH	
1.4	77	08/10 →	**FCP1466**	BOSCH				
1.4	77	08/10 →				**FCP1469**	BOSCH	
1.4	88	09/08 → 07/10	**FCP1468**	BOSCH	until chassis n:1096215			
1.4	88	09/08 → 07/10				**FCP1469**	BOSCH	
1.4 Bifuel	88	07/11 →	**FCP1468**	BOSCH				
1.4 Bifuel	88	07/11 →				**FCP1349**	LUCAS/TRW	
1.4 TB	114	09/08 →	**FCP1466**	BOSCH				
1.4 TB	114	09/08 →	**FCP1667**	BREMBO				
1.4 TB	114	09/08 →				**FCP1469**	BOSCH	
1.4 TB	120	10/09 →	**FCP1466**	BOSCH				
1.4 TB	120	10/09 →	**FCP1667**	BREMBO				
1.4 TB	120	10/09 →				**FCP1469**	BOSCH	
1.4 TB	125	10/09 →	**FCP1468**	BOSCH				
1.4 TB	125	10/09 →	**FCP1667**	BREMBO				
1.4 TB	125	10/09 →				**FCP1469**	BOSCH	
1.6 JTDm	85	09/08 →	**FCP1468**	BOSCH				
1.6 JTDm	85	09/08 →				**FCP1469**	BOSCH	
1.6 JTDm	88	09/08 →	**FCP1468**	BOSCH				
1.6 JTDm	88	09/08 →				**FCP1469**	BOSCH	
Montreal								
1.8		01/66 → 12/76	**FCP11**	ATE				
1.8		01/66 → 12/76				**FCP3**	ATE	
2.0		01/66 → 12/76	**FCP11**	ATE				
2.0		01/66 → 12/76				**FCP3**	ATE	
2.6 16V	148	01/66 → 12/76	**FCP11**	ATE				
2.6 16V	148	01/66 → 12/76				**FCP3**	ATE	

For material availability see page 16-18 / Per la disponibilità materiali vedere a pagina 16-18

FERODO RACING

Updated on November 2020

	kW				NOTE			NOTE
...ALFA ROMEO								
Spider								
1.3		01/74 → 12/82	FCP2	ATE				
1.3		01/74 → 12/82				FCP3	ATE	
1.6	75, 76	01/79 → 12/91	FCP2	ATE				
1.6	75, 76	01/79 → 12/91				FCP93	ATE	
1.6		01/74 → 12/78	FCP2	ATE				
1.6		01/74 → 12/78				FCP3	ATE	
2.0	86, 92	08/90 → 12/93	FCP11	ATE				
2.0	86, 92	08/90 → 12/93				FCP3	ATE	
2.0 i		01/83 → 07/90	FCP11	ATE				
2.0 i		01/83 → 07/90				FCP3	ATE	
2.0 i V6 Turbo	148	05/98 →	FCP1052	ATE				
2.0 i V6 Turbo	148	05/98 →				FCP1113	LUCAS/TRW	
SPIDER (916_)								
1.8 16V	106	05/98 → 04/05	FCP565	LUCAS/TRW				
1.8 16V	106	05/98 → 04/05	FCP1052	ATE				
1.8 16V	106	05/98 → 04/05	FCP1056	ATE				
1.8 16V	106	05/98 → 04/05				FCP409	LUCAS/TRW	
1.8 16V	106	05/98 → 04/05				FCP1113	LUCAS/TRW	
2.0 T.SPARK 16V	110	06/95 → 04/05	FCP565	LUCAS/TRW				
2.0 T.SPARK 16V	110	06/95 → 04/05	FCP1052	ATE				
2.0 T.SPARK 16V	110	06/95 → 04/05				FCP409	LUCAS/TRW	
2.0 T.SPARK 16V	110	06/95 → 04/05				FCP1113	LUCAS/TRW	
3.0 V6	141	06/95 → 04/05	FCP565	LUCAS/TRW				
3.0 V6	141	06/95 → 04/05	FCP721	BREMBO	sport package			
3.0 V6	141	06/95 → 04/05	FCP1052	ATE				
3.0 V6	141	06/95 → 04/05				FCP409	LUCAS/TRW	
3.0 V6	141	06/95 → 04/05				FCP1113	LUCAS/TRW	
SPIDER (939)								
1.8 TBi	147	05/09 →	FCP1334	BREMBO				
1.8 TBi	147	05/09 →				FCP1795	LUCAS/TRW	for vehicles without Sport package
2.4 JTDM	147	04/07 →	FCP1334	BREMBO				
2.4 JTDM	147	04/07 →				FCP1795	LUCAS/TRW	
2.4 JTDM	154	03/08 →	FCP1334	BREMBO				
2.4 JTDM	154	03/08 →				FCP1795	LUCAS/TRW	
3.2 JTS	191	03/08 →	FCP1334	BREMBO				
3.2 JTS	191	03/08 →				FCP1795	LUCAS/TRW	
3.2 JTS Q4	191	09/06 →	FCP1334	BREMBO				
3.2 JTS Q4	191	09/06 →				FCP1795	LUCAS/TRW	
SPIDER (939_)								
2.2 JTS	136	03/06 → 03/11	FCP1334	BREMBO	For TI equipment only			
2.2 JTS	136	03/06 → 03/11	FCP1805	ATE				
Sprint								
1.7	77, 87	03/87 → 12/89	FCP546	ATE				
STELVIO (949_)								
2.9	375	12/16 →	FRP3100	BREMBO				
SZ								
3.0 24V	152, 188	09/89 → 12/96	FCP448	ATE				
3.0 24V	152, 188	09/89 → 12/96				FCP3	ATE	
ALPINA								
B10 (E39)								
4.6 V8	250	12/96 → 10/98	FCP997	ATE				
4.6 V8	255	10/98 → 08/00	FCP997	ATE				
4.8 V8	276	04/02 →	FCP997	ATE				
B10 Touring (E39)								
4.6 V8	250	08/97 → 10/98	FCP997	ATE				
4.6 V8	255	10/98 → 07/00	FCP997	ATE				
4.8 V8	276	04/02 →	FCP997	ATE				

For material availability see page 16-18 / Per la disponibilità materiali vedere a pagina 16-18

		kW				NOTE			NOTE
ASIA MOTORS									
Rocsta									
1.8 i		57	02/92 → 06/98	**FCP170**	SUMITOMO				
2.2 i		45	02/92 → 12/98	**FCP170**	SUMITOMO				
ASTON MARTIN									
DB5									
4.0			01/63 → 12/65	**FCP9**	LUCAS/TRW				
4.0			01/63 → 12/65				**FCP815**	LUCAS/TRW	
DB6									
5.3			01/66 → 12/71	**FCP9**	LUCAS/TRW				
5.3			01/66 → 12/71				**FCP815**	LUCAS/TRW	
DB7									
3.2			01/93 → 12/97	**FCP817**	LUCAS/TRW				
3.2			01/93 → 12/97				**FCP815**	LUCAS/TRW	
3.2			01/97 →	**FCP817**	LUCAS/TRW				
3.2			01/97 →				**FCP732**	ATE	
5.9			01/99 →	**FRP3028**	BREMBO				
5.9			01/99 →				**FRP3109**	BREMBO	
DB9									
5.9			01/03 →	**FRP3067**	BREMBO				
5.9			01/03 →				**FRP3109**	BREMBO	
DBS									
5.3 Not V8			01/67 → 12/75	**FCP9**	LUCAS/TRW				
5.3 Not V8			01/67 → 12/75				**FCP815**	LUCAS/TRW	
5.3 V8			01/70 → 12/74	**FCP9**	LUCAS/TRW				
5.3 V8			01/70 → 12/74				**FCP815**	LUCAS/TRW	
LAGONDA I									
5.3		250	01/76 → 12/97	**FCP817**	LUCAS/TRW				
5.3		250	01/76 → 12/97				**FCP815**	LUCAS/TRW	
LAGONDA I Estate									
5.3		228	01/76 → 12/97	**FCP817**	LUCAS/TRW				
5.3		228	01/76 → 12/97				**FCP815**	LUCAS/TRW	
Lagonda Rapide									
4.0		258	01/61 → 12/65				**FCP815**	LUCAS/TRW	
4.0		260	01/61 → 12/65				**FCP815**	LUCAS/TRW	
4.0		262	01/61 → 12/65				**FCP815**	LUCAS/TRW	
V8									
5.3			01/73 →				**FCP815**	BREMBO	
Vanquish									
5.9 (AP Caliper)			01/01 → 12/04	**FRP3084**	AP RACING				
5.9 (Brembo Caliper)			01/01 → 12/04	**FRP3028**	BREMBO				
5.9 (Brembo Caliper)			01/01 → 12/04				**FRP3109**	BREMBO	
Vanquish S									
5.9			01/04 →	**FRP3084**	AP RACING				
Vantage									
4.3		283	01/04 → 12/08	**FRP3067**	BREMBO				
4.3		283	01/04 → 12/08				**FRP3109**	BREMBO	
4.7		313	01/08 →	**FRP3067**	BREMBO				
4.7		313	01/08 →				**FRP3109**	BREMBO	
5.3 (Solid rear disc)			01/93 → 12/97	**FRP216**	BREMBO				
5.3 (Solid rear disc)			01/93 → 12/97	**FRP217**	BREMBO				
5.3 (Vented rear disc)			01/93 → 12/97	**FRP216**	BREMBO				
5.3 (Vented rear disc)			01/93 → 12/97	**FRP217**	BREMBO				
5.3 i V8			01/96 → 12/97				**FCP815**	LUCAS/TRW	
5.3 i V8 Volante		262	01/87 → 12/93				**FCP815**	LUCAS/TRW	
5.3 i V8 Volante		262	08/93 →	**FCP9**	LUCAS/TRW				
5.3 i V8 Volante		262	08/93 →				**FCP815**	LUCAS/TRW	
AMR GT3			01/18 →	**FRP3153**	ALCON				
AMR GT3			01/18 →				**FRP1078**	ALCON	
AMR GT4			01/18 →	**FRP3153**	ALCON				
AMR GT4			01/18 →				**FRP1078**	ALCON	
AMR GT4			01/20 →	**FRP3014**	ALCON				

For material availability see page 16-18 / Per la disponibilità materiali vedere a pagina 16-18

FERODO RACING
Updated on November 2020

	kW		!		NOTE	!		NOTE
...ASTON MARTIN								
...Vantage								
AMR GT4		01/20 →				FRP302	ALCON	
V8 GTE		01/12 → 12/17	FRP3153	ALCON				
V8 GTE		01/12 → 12/17				FRP1078	ALCON	
V8 GTE		01/18 →	FRP3153	ALCON				
V8 GTE		01/18 →				FRP1078	ALCON	
Vantage Coupe								
4.3	283	10/05 → 12/08	FRP3067	BREMBO				
4.3	283	10/05 → 12/08				FRP3109	BREMBO	
4.7	313	01/08 →	FRP3067	BREMBO				
4.7	313	01/08 →				FRP3109	BREMBO	
Virage								
5.3 32V	242	01/89 → 12/93	FCP817	LUCAS/TRW				
5.3 32V	242	01/89 → 12/93				FCP815	LUCAS/TRW	
5.3 32V (Solid rear disc)	242	01/93 →	FRP216	BREMBO				
Virage Contd.								
5.3 (Solid rear disc)	242	01/93 →	FRP217	BREMBO				
5.3 (Vented rear disc)	242	01/93 →	FRP216	BREMBO				
5.3 (Vented rear disc)	242	01/93 →	FRP217	BREMBO				
Volante								
5.3		01/76 → 12/93				FCP815	LUCAS/TRW	
5.3		01/93 →	FRP216	BREMBO				
5.3		01/94 →	FRP217	BREMBO				
Zagato								
5.3		01/85 → 12/88				FCP815	BREMBO	
AUDI								
100								
1.6	63	08/81 → 09/82	FCP370	LUCAS/TRW				
1.8	66	09/82 → 09/88	FCP775	LUCAS/TRW				
1.8	66	10/88 → 12/90	FCP775	LUCAS/TRW				
1.8 100 Quattro	66	01/84 → 08/86	FCP775	LUCAS/TRW				
1.8 100 Quattro	66	01/84 → 08/86				FCP596	LUCAS/TRW	
1.8 100 Quattro Avant	66	01/85 → 08/88	FCP775	LUCAS/TRW				
1.8 100 Quattro Avant	66	01/85 → 08/88				FCP596	LUCAS/TRW	
1.8 Avant	66	01/76 → 12/82	FCP775	LUCAS/TRW				
1.8 Avant	66	01/82 → 01/85	FCP775	LUCAS/TRW				
1.8 Avant	66	01/82 → 01/85				FCP596	LUCAS/TRW	
1.9	74	09/81 → 07/82	FCP370	LUCAS/TRW				
1.9	74	09/82 → 12/90	FCP775	LUCAS/TRW				
1.9	74	09/82 → 12/90				FCP596	LUCAS/TRW	
1.9 Avant	74	01/76 → 12/82	FCP775	LUCAS/TRW				
1.9 Avant	74	01/82 → 01/85	FCP775	LUCAS/TRW				
1.9 Avant	74	01/82 → 01/85				FCP596	LUCAS/TRW	
2.0	51, 66	09/82 → 09/88	FCP775	LUCAS/TRW				
2.0	51, 66	09/82 → 09/88				FCP596	LUCAS/TRW	
2.0	51, 66	10/88 → 12/90	FCP775	LUCAS/TRW				
2.0	51, 66	10/88 → 12/90				FCP596	LUCAS/TRW	
2.0	74	12/90 → 06/94	FCP590	ATE				
2.0	74	12/90 → 06/94				FCP596	LUCAS/TRW	
2.0 100 Quattro	85, 98	12/90 → 12/94	FCP590	ATE				
2.0 100 Quattro	85, 98	12/90 → 12/94				FCP596	LUCAS/TRW	
2.0 100 Quattro Avant	85, 103	12/90 → 12/94	FCP590	ATE				
2.0 100 Quattro Avant	85, 103	12/90 → 12/94				FCP596	LUCAS/TRW	
2.0 100 Quattro E 16V	103	01/93 → 12/94	FCP590	ATE				
2.0 100 Quattro E 16V	103	01/93 → 12/94				FCP596	LUCAS/TRW	
2.0 Avant	51	01/76 → 12/82	FCP775	LUCAS/TRW				
2.0 Avant	51	01/82 → 01/85	FCP775	LUCAS/TRW				
2.0 Avant	51	01/82 → 01/85				FCP596	LUCAS/TRW	
2.0 Avant E	85	01/85 → 11/90	FCP775	LUCAS/TRW				
2.0 Avant E	85	01/85 → 11/90				FCP596	LUCAS/TRW	
2.0 Avant Not S4	85	01/91 → 12/94	FCP590	ATE				
2.0 Avant Not S4	85	01/91 → 12/94				FCP596	LUCAS/TRW	
2.0 D	51	08/78 → 07/82	FCP370	LUCAS/TRW				
2.0 D	51	08/82 → 07/84	FCP775	LUCAS/TRW				
2.0 D	51	08/82 → 07/84				FCP596	LUCAS/TRW	
2.0 D	51	08/84 → 07/88	FCP775	LUCAS/TRW				
2.0 D	51	08/84 → 07/88				FCP596	LUCAS/TRW	
2.0 D Avant	51	08/78 → 02/83	FCP370	LUCAS/TRW				

For material availability see page 16-18 / Per la disponibilità materiali vedere a pagina 16-18

...AUDI

...100

	kW				NOTE			NOTE
2.0 D Avant	51	03/83 → 08/88	**FCP775**	LUCAS/TRW				
2.0 D Avant	51	03/83 → 08/88				**FCP596**	LUCAS/TRW	
2.0 D Avant	51	09/88 → 11/90	**FCP775**	LUCAS/TRW				
2.0 D Avant	51	09/88 → 11/90				**FCP596**	LUCAS/TRW	
2.0 TD	51, 66	08/82 → 07/84	**FCP775**	LUCAS/TRW				
2.0 TD	51, 66	08/82 → 07/84				**FCP596**	LUCAS/TRW	
2.0 TD	51, 66	08/84 → 11/90	**FCP775**	LUCAS/TRW				
2.0 TD	51, 66	08/84 → 11/90				**FCP596**	LUCAS/TRW	
2.1	95, 96	09/82 → 12/90	**FCP775**	LUCAS/TRW				
2.1	95, 96	09/82 → 12/90				**FCP596**	LUCAS/TRW	
2.1 Avant	95	01/76 → 12/82	**FCP775**	LUCAS/TRW				
2.1 Avant	95, 96	01/82 → 01/85	**FCP775**	LUCAS/TRW				
2.1 Avant	95, 96	01/82 → 01/85				**FCP596**	LUCAS/TRW	
2.1 E 10V	85, 95	07/80 → 09/82	**FCP775**	LUCAS/TRW				
2.1 S	85	01/78 → 09/82	**FCP370**	LUCAS/TRW				
2.2	100	09/80 → 07/82	**FCP775**	LUCAS/TRW				
2.2	85	10/77 → 08/78	**FCP370**	LUCAS/TRW				
2.2	85	09/78 → 07/82	**FCP370**	LUCAS/TRW				
2.2 100 Quattro	101	01/84 → 08/86	**FCP775**	LUCAS/TRW				
2.2 100 Quattro	101	01/84 → 08/86				**FCP596**	LUCAS/TRW	
2.2 100 Quattro 20V	169	12/90 → 12/94	**FCP590**	ATE				
2.2 100 Quattro 20V	169	12/90 → 12/94				**FCP596**	LUCAS/TRW	
2.2 100 Quattro Avant	101	01/84 → 08/86	**FCP775**	LUCAS/TRW				
2.2 100 Quattro Avant	101	01/84 → 08/86				**FCP596**	LUCAS/TRW	
2.2 Avant	100	01/76 → 12/82	**FCP775**	LUCAS/TRW				
2.2 Avant	85	01/76 → 12/82	**FCP775**	LUCAS/TRW				
2.2 S4 + SW Estate	169	12/90 → 12/94	**FCP590**	ATE				
2.2 S4 + SW Estate	169	12/90 → 12/94				**FCP596**	LUCAS/TRW	
2.3 100 Quattro	98, 100	12/90 → 12/94	**FCP590**	ATE				
2.3 100 Quattro	98, 100	12/90 → 12/94				**FCP596**	LUCAS/TRW	
2.3 100 Quattro Avant	100	01/85 → 08/88	**FCP775**	LUCAS/TRW				
2.3 100 Quattro Avant	100	01/85 → 08/88				**FCP596**	LUCAS/TRW	
2.3 100 Quattro Avant	98, 100	12/90 → 12/94	**FCP590**	ATE				
2.3 100 Quattro Avant	98, 100	12/90 → 12/94				**FCP596**	LUCAS/TRW	
2.3 10V	100	09/82 → 09/88	**FCP775**	LUCAS/TRW				
2.3 10V	100	09/82 → 09/88				**FCP596**	LUCAS/TRW	
2.3 10V	100	10/88 → 12/90	**FCP775**	LUCAS/TRW				
2.3 10V	100	10/88 → 12/90				**FCP596**	LUCAS/TRW	
2.3 Avant		01/76 → 12/82	**FCP775**	LUCAS/TRW				
2.3 Avant	98	01/91 → 12/94	**FCP590**	ATE				
2.3 Avant	98	01/91 → 12/94				**FCP596**	LUCAS/TRW	
2.3 E	98	12/90 → 12/94	**FCP590**	ATE				
2.3 E	98	12/90 → 12/94				**FCP596**	LUCAS/TRW	
2.4 D	60	08/89 → 07/91	**FCP775**	LUCAS/TRW				
2.4 D	60	08/89 → 07/91				**FCP596**	LUCAS/TRW	
2.4 D	60	08/91 → 12/94	**FCP590**	ATE				
2.4 D	60	08/91 → 12/94				**FCP596**	LUCAS/TRW	
2.4 D Avant	60	01/76 → 12/82	**FCP775**	LUCAS/TRW				
2.4 D Avant	60	01/91 → 12/94	**FCP590**	ATE				
2.4 D Avant	60	01/91 → 12/94				**FCP596**	LUCAS/TRW	
2.5 TD	60	12/90 → 12/94	**FCP590**	ATE				
2.5 TD	60	12/90 → 12/94				**FCP596**	LUCAS/TRW	
2.5 TD 10V	88	09/82 → 12/90	**FCP775**	LUCAS/TRW				
2.5 TD 10V	88	09/82 → 12/90				**FCP596**	LUCAS/TRW	
2.5 TD Avant	85	01/76 → 12/82	**FCP775**	LUCAS/TRW				
2.5 TD Avant	85	01/91 → 12/94	**FCP590**	ATE				
2.5 TD Avant	85	01/91 → 12/94				**FCP596**	LUCAS/TRW	
2.5 TDi	85	12/90 → 12/94	**FCP590**	ATE				
2.5 TDi	85	12/90 → 12/94				**FCP596**	LUCAS/TRW	
2.5 TDi	88	01/90 → 11/90	**FCP775**	LUCAS/TRW				
2.5 TDi	88	01/90 → 11/90				**FCP596**	LUCAS/TRW	
2.6 100 Quattro Avant	110	12/90 → 12/94	**FCP590**	ATE				
2.6 100 Quattro Avant	110	12/90 → 12/94				**FCP596**	LUCAS/TRW	
2.6 E	110	12/90 → 12/94	**FCP590**	ATE				
2.6 E	110	12/90 → 12/94				**FCP596**	LUCAS/TRW	
2.8 100 Quattro Avant	128	12/90 → 12/94	**FCP590**	ATE				
2.8 100 Quattro Avant	128	12/90 → 12/94				**FCP596**	LUCAS/TRW	
2.8 E	128	12/90 → 12/94	**FCP590**	ATE				
2.8 E	128	12/90 → 12/94				**FCP596**	LUCAS/TRW	
4.2 100 Quattro 32V	206	12/90 → 12/94	**FCP590**	ATE				
4.2 100 Quattro 32V	206	12/90 → 12/94				**FCP596**	LUCAS/TRW	

For material availability see page 16-18 / Per la disponibilità materiali vedere a pagina 16-18

FERODO RACING
Updated on November 2020

...AUDI

			kW					NOTE			NOTE
100 (44, 44Q, C3)											
2.2	101	08/84 → 12/88		**FCP775**	LUCAS/TRW						
2.2	101	08/84 → 12/88					**FCP596**	LUCAS/TRW			
2.2	85	10/84 → 09/86		**FCP775**	LUCAS/TRW						
2.2	85	10/84 → 09/86					**FCP596**	LUCAS/TRW			
2.2 Cat	101	06/89 → 11/90		**FCP775**	LUCAS/TRW						
2.2 Cat	101	06/89 → 11/90					**FCP596**	LUCAS/TRW			
2.2 Turbo	121	08/86 → 11/90		**FCP775**	LUCAS/TRW						
2.2 Turbo	121	08/86 → 11/90					**FCP596**	LUCAS/TRW			
100 (C1)											
1.6	63	01/75 → 07/76		**FCP105**	ATE						
1.8	59	11/68 → 11/71		**FCP105**	ATE						
1.8	63	09/71 → 07/74		**FCP105**	ATE						
1.8	74	10/70 → 07/76		**FCP105**	ATE						
1.9	82	09/71 → 07/76		**FCP105**	ATE						
100 Avant (44, 44Q, C3)											
2.2	101	08/84 → 12/88		**FCP775**	LUCAS/TRW						
2.2	101	08/84 → 12/88					**FCP596**	LUCAS/TRW			
2.2	85	10/84 → 09/86		**FCP775**	LUCAS/TRW						
2.2	85	10/84 → 09/86					**FCP596**	LUCAS/TRW			
2.2 Cat quattro	101	06/89 → 11/90		**FCP775**	LUCAS/TRW						
2.2 Cat quattro	101	06/89 → 11/90					**FCP596**	LUCAS/TRW			
2.2 E quattro	88	08/85 → 07/86		**FCP775**	LUCAS/TRW						
2.2 E quattro	88	08/85 → 07/86					**FCP596**	LUCAS/TRW			
2.2 quattro	101	08/84 → 12/88		**FCP775**	LUCAS/TRW						
2.2 quattro	101	08/84 → 12/88					**FCP596**	LUCAS/TRW			
2.2 Turbo quattro	121	08/86 → 11/90		**FCP775**	LUCAS/TRW						
2.2 Turbo quattro	121	08/86 → 11/90					**FCP596**	LUCAS/TRW			
100 Avant (4A5, C4)											
S4 Turbo quattro	169	09/91 → 07/94		**FCP590**	ATE						
S4 Turbo quattro	169	09/91 → 07/94					**FCP596**	LUCAS/TRW			
200											
2.0		09/83 → 11/90		**FCP775**	LUCAS/TRW						
2.0		09/83 → 11/90					**FCP596**	LUCAS/TRW			
2.0 TD	55	09/83 → 11/90		**FCP775**	LUCAS/TRW						
2.0 TD	55	09/83 → 11/90					**FCP596**	LUCAS/TRW			
2.1	100, 125	01/79 → 07/83		**FCP775**	LUCAS/TRW						
2.1	100, 125	01/79 → 07/83					**FCP596**	LUCAS/TRW			
2.2	100	10/79 → 09/82		**FCP775**	LUCAS/TRW						
2.2	100	10/79 → 09/82					**FCP596**	LUCAS/TRW			
2.2	103	07/83 → 01/86		**FCP775**	LUCAS/TRW						
2.2	103	07/83 → 01/86					**FCP596**	LUCAS/TRW			
2.3	100	07/83 → 01/86		**FCP775**	LUCAS/TRW						
2.3	100	07/83 → 01/86					**FCP596**	LUCAS/TRW			
200 (44, 44Q)											
2.1 5E	100	08/83 → 07/84		**FCP775**	LUCAS/TRW						
2.1 5E	100	08/83 → 07/84					**FCP596**	LUCAS/TRW			
2.1 Turbo	134	08/83 → 01/88		**FCP775**	LUCAS/TRW						
2.1 Turbo	134	08/83 → 01/88					**FCP596**	LUCAS/TRW			
2.1 Turbo quattro	134	08/83 → 09/86		**FCP775**	LUCAS/TRW						
2.1 Turbo quattro	134	08/83 → 09/86					**FCP596**	LUCAS/TRW			
200 Avant (44, 44Q)											
2.1 Turbo quattro	134	09/83 → 01/88		**FCP775**	LUCAS/TRW						
2.1 Turbo quattro	134	09/83 → 01/88					**FCP596**	LUCAS/TRW			
50											
1.1	37	01/74 → 12/80		**FCP105**	ATE						
1.1	38	01/74 → 12/80		**FCP105**	ATE						
1.1	44	01/74 → 12/80		**FCP105**	ATE						
1.3	44	01/74 → 12/80		**FCP105**	ATE						
60											
1.4	40	09/68 → 08/72		**FCP105**	ATE						
80											
1.3	40, 44	12/74 → 09/79		**FCP105**	ATE						
1.3	44	10/79 → 08/86		**FCP370**	LUCAS/TRW	Solid					
1.3	44	10/79 → 08/86		**FCP774**	LUCAS/TRW	Vented					
1.3 Auto	40, 44	01/72 → 11/74		**FCP105**	ATE						
1.3 Manual	40, 44	01/72 → 11/74		**FCP105**	ATE						

For material availability see page 16-18 / Per la disponibilità materiali vedere a pagina 16-18

...AUDI

...80

	kW				NOTE			NOTE
1.3 Variant	40, 44	01/66 → 12/72	**FCP2**	ATE				
1.4		09/86 → 06/91	**FCP775**	LUCAS/TRW				
1.5 Auto	55	01/72 → 11/74	**FCP105**	ATE				
1.5 Auto	55	12/74 → 07/76	**FCP105**	ATE				
1.5 Auto	55	08/76 → 07/81	**FCP105**	ATE				
1.5 Manual	55	01/72 → 11/74	**FCP105**	ATE				
1.5 Manual	55	12/74 → 07/76	**FCP105**	ATE				
1.5 Manual	55	08/76 → 07/81	**FCP105**	ATE				
1.5 Variant	55	01/66 → 12/72	**FCP2**	ATE				
1.6	52, 75	07/91 → 01/96	**FCP775**	LUCAS/TRW				
1.6	52, 75	07/91 → 01/96				**FCP596**	LUCAS/TRW	
1.6	51	10/79 → 08/86	**FCP370**	LUCAS/TRW	Solid			
1.6	53	10/79 → 08/86	**FCP370**	LUCAS/TRW	Solid			
1.6	55	10/79 → 08/86	**FCP370**	LUCAS/TRW	Solid			
1.6 Auto		01/72 → 11/74	**FCP105**	ATE				
1.6 Auto		12/74 → 09/79	**FCP105**	ATE				
1.6 Manual		01/72 → 11/74	**FCP105**	ATE				
1.6 Manual		12/74 → 09/79	**FCP105**	ATE				
1.6 Variant		01/66 → 12/72	**FCP2**	ATE				
1.8	65	10/79 → 08/86	**FCP370**	LUCAS/TRW	Solid			
1.8	66	10/79 → 08/86	**FCP370**	LUCAS/TRW	Solid			
1.8	68	10/79 → 08/86	**FCP370**	LUCAS/TRW	Solid			
1.8 80 Quattro	66	01/83 → 09/86	**FCP774**	LUCAS/TRW				
1.8 80 Quattro	66	01/83 → 09/86				**FCP596**	LUCAS/TRW	
1.8 80 Quattro	66	09/86 → 08/88	**FCP775**	LUCAS/TRW				
1.8 80 Quattro	66	09/86 → 08/88				**FCP596**	LUCAS/TRW	
1.8 80 Quattro	68	01/83 → 09/86	**FCP774**	LUCAS/TRW				
1.8 80 Quattro	68	01/83 → 09/86				**FCP596**	LUCAS/TRW	
1.8 80 Quattro	82	01/83 → 09/86	**FCP774**	LUCAS/TRW				
1.8 80 Quattro	82	01/83 → 09/86				**FCP596**	LUCAS/TRW	
1.8 Std, S	83	09/86 → 06/91	**FCP775**	LUCAS/TRW				
1.9	85	10/79 → 08/86	**FCP370**	LUCAS/TRW	Solid			
1.9	85	10/79 → 08/86	**FCP774**	LUCAS/TRW	Vented			
1.9 80 Quattro	83	09/86 → 08/88	**FCP775**	LUCAS/TRW				
1.9 80 Quattro	83	09/86 → 08/88				**FCP596**	LUCAS/TRW	
1.9 Automatic	85	08/81 → 07/83	**FCP370**	LUCAS/TRW	Solid			
1.9 D	48	09/86 → 06/91	**FCP775**	LUCAS/TRW				
1.9 D	48	07/91 → 09/95	**FCP775**	LUCAS/TRW				
1.9 E	83	09/86 → 06/91	**FCP775**	LUCAS/TRW				
1.9 E	83	09/86 → 06/91				**FCP596**	LUCAS/TRW	
1.9 TD		07/91 → 08/92	**FCP775**	LUCAS/TRW				
1.9 TD		07/91 → 08/92				**FCP596**	LUCAS/TRW	
1.9 TD		09/92 → 12/94	**FCP775**	LUCAS/TRW				
1.9 TD		09/92 → 12/94				**FCP596**	LUCAS/TRW	
1.9 TDi	66	07/92 → 01/96	**FCP775**	LUCAS/TRW				
1.9 TDi	66	07/92 → 01/96				**FCP409**	LUCAS/TRW	
1.9 TDi	66	07/92 → 01/96				**FCP596**	LUCAS/TRW	
2.0	85	10/79 → 08/86	**FCP370**	LUCAS/TRW	Solid			
2.0	85	10/79 → 08/86	**FCP774**	LUCAS/TRW	Vented			
2.0 80 Quattro	82, 85	06/91 → 07/92	**FCP775**	LUCAS/TRW				
2.0 80 Quattro	82, 85	06/91 → 07/92				**FCP596**	LUCAS/TRW	
2.0 80 Quattro	82, 85	08/92 → 12/96	**FCP775**	LUCAS/TRW				
2.0 80 Quattro	82, 85	08/92 → 12/96				**FCP596**	LUCAS/TRW	
2.0 80 Quattro	85	08/82 → 12/84	**FCP774**	LUCAS/TRW				
2.0 80 Quattro	85	08/82 → 12/84				**FCP596**	LUCAS/TRW	
2.0 80 Quattro	85	01/85 → 09/86	**FCP774**	LUCAS/TRW				
2.0 80 Quattro	85	01/85 → 09/86				**FCP596**	LUCAS/TRW	
2.0 Automatic	85	09/83 →	**FCP370**	LUCAS/TRW	Solid			
2.0 Avant	106	07/92 → 01/96	**FCP775**	LUCAS/TRW				
2.0 Avant	106	07/92 → 01/96				**FCP596**	LUCAS/TRW	
2.0 E 16V	103	07/91 → 12/94	**FCP775**	LUCAS/TRW				
2.0 E 16V	103	07/91 → 12/94				**FCP596**	LUCAS/TRW	
2.0 Not Sport 16V	101	09/86 → 06/91	**FCP775**	LUCAS/TRW				
2.0 Not Sport 16V	101	09/86 → 06/91				**FCP596**	LUCAS/TRW	
2.1	85	10/79 → 08/86	**FCP370**	LUCAS/TRW	Solid			
2.1	85	10/79 → 08/86	**FCP774**	LUCAS/TRW	Vented			
2.1 80 Quattro	96, 100	01/83 → 09/86	**FCP775**	LUCAS/TRW				
2.1 80 Quattro	96, 100	01/83 → 09/86				**FCP596**	LUCAS/TRW	
2.2 80 Quattro 20V	169	01/83 → 05/87	**FCP774**	LUCAS/TRW				
2.2 80 Quattro 20V	169	01/83 → 05/87				**FCP596**	LUCAS/TRW	
2.2 80 Quattro Avant RS2 Turbo 20V	232	03/94 → 05/95	**FCP560**	ATE				
2.2 80 Quattro Avant RS2 Turbo 20V	232	03/94 → 05/95				**FCP541**	LUCAS/TRW	
2.2 80 Quattro Saloon 20V	169	06/91 → 07/96	**FCP775**	LUCAS/TRW				
2.2 80 Quattro Saloon 20V	169	06/91 → 07/96				**FCP596**	LUCAS/TRW	
2.2 E		09/86 → 06/91	**FCP775**	LUCAS/TRW				
2.2 E		09/86 → 06/91				**FCP596**	LUCAS/TRW	
2.3 80 Quattro Saloon	98	06/91 → 07/92	**FCP775**	LUCAS/TRW				
2.3 80 Quattro Saloon	98	06/91 → 07/92				**FCP596**	LUCAS/TRW	

For material availability see page 16-18 / Per la disponibilità materiali vedere a pagina 16-18

FERODO RACING
Updated on November 2020

...AUDI	kW				NOTE			NOTE
...80								
2.3 E	98	07/91 → 07/92	**FCP775**	LUCAS/TRW				
2.3 E	98	07/91 → 07/92				**FCP596**	LUCAS/TRW	
2.3 E	98	08/92 → 12/96	**FCP775**	LUCAS/TRW				
2.3 E	98	08/92 → 12/96				**FCP596**	LUCAS/TRW	
2.3 i E		09/86 → 06/91	**FCP775**	LUCAS/TRW				
2.6	110	07/92 → 12/96	**FCP775**	LUCAS/TRW				
2.6	110	07/92 → 12/96				**FCP596**	LUCAS/TRW	
2.6 80 Quattro Saloon	110	06/91 → 07/96	**FCP775**	LUCAS/TRW				
2.6 80 Quattro Saloon	110	06/91 → 07/96				**FCP596**	LUCAS/TRW	
2.6 80 Quattro V6 Avant	110	07/92 → 12/96	**FCP775**	LUCAS/TRW				
2.6 80 Quattro V6 Avant	110	07/92 → 12/96				**FCP596**	LUCAS/TRW	
2.8 80 Quattro Saloon	128	06/91 → 12/94	**FCP775**	LUCAS/TRW				
2.8 80 Quattro Saloon	128	06/91 → 12/94				**FCP596**	LUCAS/TRW	
80 (89, 89Q, 8A, B3)								
1.6	51	08/87 → 09/91	**FCP775**	LUCAS/TRW				
1.6	55	09/86 → 08/91	**FCP775**	LUCAS/TRW				
1.6 D	40	02/87 → 07/89	**FCP775**	LUCAS/TRW				
1.6 TD	59	09/86 → 08/91	**FCP775**	LUCAS/TRW				
1.8	55	10/86 → 01/90	**FCP775**	LUCAS/TRW				
1.8	55	10/86 → 01/90				**FCP596**	LUCAS/TRW	
1.8 E	82	06/86 → 08/91	**FCP775**	LUCAS/TRW				
1.8 E	82	06/86 → 08/91				**FCP596**	LUCAS/TRW	
1.8 S	66	09/86 → 10/91	**FCP775**	LUCAS/TRW				
1.8 S	66	09/86 → 10/91				**FCP596**	LUCAS/TRW	
90								
1.4		09/86 → 06/91	**FCP775**	LUCAS/TRW				
1.6 TD	51	01/84 → 07/87	**FCP774**	LUCAS/TRW				
1.6 TD	59	07/87 → 12/92	**FCP775**	LUCAS/TRW				
1.8	82	01/84 → 07/87	**FCP774**	LUCAS/TRW				
1.8	82	08/89 → 12/92	**FCP775**	LUCAS/TRW				
1.9 TD		09/86 → 06/91	**FCP775**	LUCAS/TRW				
2.0	85	01/84 → 07/87	**FCP774**	LUCAS/TRW				
2.0	85	07/87 → 12/92	**FCP774**	LUCAS/TRW				
2.0	85	07/87 → 12/92	**FCP775**	LUCAS/TRW				
2.0	85	07/87 → 12/92				**FCP596**	LUCAS/TRW	
2.0 90 Quattro	100	07/87 → 12/92	**FCP775**	LUCAS/TRW				
2.0 90 Quattro	100	07/87 → 12/92				**FCP596**	LUCAS/TRW	
2.0 90 Quattro	85	01/85 → 07/87	**FCP774**	LUCAS/TRW				
2.0 90 Quattro	85	01/85 → 07/87				**FCP596**	LUCAS/TRW	
2.2	100	07/87 → 12/92	**FCP774**	LUCAS/TRW				
2.2	100	07/87 → 12/92	**FCP775**	LUCAS/TRW				
2.2	100	07/87 → 12/92				**FCP596**	LUCAS/TRW	
2.2	89, 100	01/84 → 07/87	**FCP774**	LUCAS/TRW				
2.2	89, 100	01/84 → 07/87				**FCP596**	LUCAS/TRW	
2.2 90 Quattro	100	07/87 → 12/92	**FCP775**	LUCAS/TRW				
2.2 90 Quattro	100	07/87 → 12/92				**FCP596**	LUCAS/TRW	
2.2 90 Quattro	89, 100	01/85 → 07/87	**FCP774**	LUCAS/TRW				
2.2 90 Quattro	89, 100	01/85 → 07/87				**FCP596**	LUCAS/TRW	
2.3	98, 100	07/87 → 12/92	**FCP774**	LUCAS/TRW				
2.3	98, 100	07/87 → 12/92	**FCP775**	LUCAS/TRW				
2.3	98, 100	07/87 → 12/92				**FCP596**	LUCAS/TRW	
2.3 90 Quattro	98	01/85 → 07/87	**FCP774**	LUCAS/TRW				
2.3 90 Quattro	98	01/85 → 07/87				**FCP596**	LUCAS/TRW	
2.3 90 Quattro	98	07/87 → 12/92	**FCP775**	LUCAS/TRW				
2.3 90 Quattro	98	07/87 → 12/92				**FCP596**	LUCAS/TRW	
2.3 90 Quattro E	125	04/87 → 07/88	**FCP775**	LUCAS/TRW				
2.3 90 Quattro E	125	04/87 → 07/88				**FCP596**	LUCAS/TRW	
2.3 90 Quattro E 20V	125	08/88 → 07/91	**FCP775**	LUCAS/TRW				
2.3 E	100	04/87 → 07/88	**FCP775**	LUCAS/TRW				
2.3 E	100	04/87 → 07/88				**FCP596**	LUCAS/TRW	
2.3 E	98	03/90 → 07/91	**FCP775**	LUCAS/TRW				
2.3 E	98	03/90 → 07/91				**FCP596**	LUCAS/TRW	
A1 (8X1)								
1.2 TFSI	63	05/10 →	**FCP1094**	ATE	PR 1ZG			
1.2 TFSI	63	05/10 →	**FCP1641**	ATE	PR 1ZC			
1.2 TFSI	63	05/10 →				**FCP1491**	LUCAS/TRW	PR 1KT
1.4 TFSI	136	01/11 →	**FCP1094**	ATE	PR 1ZG			
1.4 TFSI	136	01/11 →	**FCP1641**	ATE	PR 1ZC			
1.4 TFSI	136	01/11 →				**FCP1491**	LUCAS/TRW	PR 1KT
1.4 TFSI	90	05/10 →	**FCP1094**	ATE	PR 1ZG			
1.4 TFSI	90	05/10 →	**FCP1641**	ATE	PR 1ZC			
1.4 TFSI	90	05/10 →				**FCP1491**	LUCAS/TRW	PR 1KT
1.4 TFSI	103	04/12 →	**FCP1094**	ATE	PR 1ZG			
1.4 TFSI	103	04/12 →	**FCP1641**	ATE	PR 1LJ/1ZC			

For material availability see page 16-18 / Per la disponibilità materiali vedere a pagina 16-18

...AUDI	kW				NOTE			NOTE
...A1 (8X1)								
1.4 TFSI	103	04/12 →				FCP1491	LUCAS/TRW	PR 1KT
1.6 TDI	66	03/11 →	FCP1094	ATE	PR 1ZG			
1.6 TDI	66	03/11 →	FCP1641	ATE	PR 1ZC			
1.6 TDI	66	03/11 →				FCP1491	LUCAS/TRW	PR 1KT
1.6 TDI	77	05/10 →	FCP1094	ATE	PR 1ZG			
1.6 TDI	77	05/10 →	FCP1641	ATE	PR 1ZC			
1.6 TDI	77	05/10 →				FCP1491	LUCAS/TRW	PR 1KT
2.0 TDI	100	05/12 →	FCP1094	ATE	PR 1ZG			
2.0 TDI	100	05/12 →	FCP1641	ATE	PR 1ZC			
2.0 TDI	100	05/12 →				FCP1491	LUCAS/TRW	PR 1KT
2.0 TDI	105	09/11 →	FCP1094	ATE	PR 1ZG			
2.0 TDI	105	09/11 →	FCP1641	ATE	PR 1ZC			
2.0 TDI	105	09/11 →				FCP1491	LUCAS/TRW	PR 1KT
A1 (8X1,8XK)								
2.0 S1 Quattro	170	03/14 →	FCP1641	ATE				
A1 Sportback (8XA)								
1.2 TFSI	63	01/12 →	FCP1094	ATE	PR 1ZG			
1.2 TFSI	63	01/12 →	FCP1641	ATE	PR 1LJ/1ZC			
1.2 TFSI	63	01/12 →				FCP1491	LUCAS/TRW	PR 1KT
1.4 TFSI	90	11/11 →	FCP1094	ATE	PR 1ZG			
1.4 TFSI	90	11/11 →	FCP1641	ATE	PR 1ZC			
1.4 TFSI	90	11/11 →				FCP1491	LUCAS/TRW	PR 1KT
1.4 TFSI	103	04/12 →	FCP1094	ATE	PR 1ZG			
1.4 TFSI	103	04/12 →	FCP1641	ATE	PR 1LJ/1ZC			
1.4 TFSI	103	04/12 →				FCP1491	LUCAS/TRW	PR 1KT
1.6 TDI	66	11/11 →	FCP1094	ATE	PR 1ZG			
1.6 TDI	66	11/11 →	FCP1641	ATE	PR 1ZC			
1.6 TDI	66	11/11 →				FCP1491	LUCAS/TRW	PR 1KT
1.6 TDI	77	11/11 →	FCP1094	ATE	PR 1ZG			
1.6 TDI	77	11/11 →	FCP1641	ATE	PR 1ZC			
1.6 TDI	77	11/11 →				FCP1491	LUCAS/TRW	PR 1KT
2.0 TDI	100	05/12 →	FCP1094	ATE	PR 1ZG			
2.0 TDI	100	05/12 →	FCP1641	ATE	PR 1ZC			
2.0 TDI	100	05/12 →				FCP1491	LUCAS/TRW	PR 1KT
A2								
1.4 i	55	02/00 →	FCP1094	ATE				
1.4 TDi	55	02/00 →	FCP1094	ATE				
1.4 TDi	55	02/00 →				FCP1491	LUCAS/TRW	
1.6 FSi		05/02 → 08/05	FCP1094	ATE				
1.6 FSi		05/02 → 08/05				FCP541	LUCAS/TRW	
A3 (8L1)								
1.6 i		10/96 → 12/00	FCP1094	ATE				
1.6 i		10/96 → 12/00				FCP541	LUCAS/TRW	
1.6 i	75	01/00 → 03/03	FCP1094	ATE				
1.6 i	75	01/00 → 03/03				FCP541	LUCAS/TRW	
1.8 20V		10/96 → 12/00	FCP1094	ATE				
1.8 20V		10/96 → 12/00				FCP541	LUCAS/TRW	
1.8 20V		01/00 → 03/03	FCP1094	ATE				
1.8 20V		01/00 → 03/03				FCP541	LUCAS/TRW	
1.8 Quattro	92	08/98 →	FCP1094	ATE				
1.8 Quattro	92	08/98 →				FCP1491	LUCAS/TRW	
1.8 T Sport 20V		10/96 → 12/00	FCP590	ATE				
1.8 T Sport 20V		10/96 → 12/00				FCP541	LUCAS/TRW	
1.8 T Sport, Quattro 20V	110	01/00 → 03/03	FCP590	ATE				
1.8 T Sport, Quattro 20V	110	01/00 → 03/03				FCP541	LUCAS/TRW	
1.9 TDi		10/96 → 12/00	FCP1094	ATE				
1.9 TDi		10/96 → 12/00				FCP541	LUCAS/TRW	
1.9 TDi		01/00 → 03/03	FCP1094	ATE				
1.9 TDi		01/00 → 03/03				FCP541	LUCAS/TRW	
1.9 TDI	96	08/00 →	FCP590	ATE				
1.9 TDI	96	08/00 →				FCP1491	LUCAS/TRW	
1.9 TDI Quattro	96	08/00 →	FCP590	ATE				
1.9 TDI Quattro	96	08/00 →				FCP1491	LUCAS/TRW	
S3 Quattro	154	01/99 →	FCP590	ATE				
S3 Quattro	154	01/99 →				FCP1491	LUCAS/TRW	
S3 Quattro	165	01/99 →	FCP590	ATE				
S3 Quattro	165	01/99 →				FCP1491	LUCAS/TRW	

For material availability see page 16-18 / Per la disponibilità materiali vedere a pagina 16-18

FERODO RACING
Updated on November 2020

...AUDI

A3 (8P1)

	kW				NOTE			NOTE
1.2 TSI	77	04/10 → 08/12	**FCP1094**	ATE				
1.2 TSI	77	04/10 → 08/12	**FCP1641**	ATE	Disc Diam mm:312/288,For PR code:1ZE,1LJ			
1.2 TSI	77	04/10 → 08/12	**FCP4223**	ATE	Disc Diam mm:345,For PR code:1ZK			
1.2 TSI	77	04/10 → 08/12				**FCP1491**	LUCAS/TRW	
1.4 TFSI	92	09/07 → 08/12	**FCP1641**	ATE	Disc Diam mm:312/288,For PR code:1ZE,1ZP,1LJ			
1.4 TFSI	92	09/07 → 08/12	**FCP4223**	ATE	Disc Diam mm:345,For PR code:1ZK			
1.4 TFSI	92	09/07 → 08/12				**FCP1491**	LUCAS/TRW	
1.6	75	05/03 → 08/12	**FCP1641**	ATE	Disc Diam mm:312/288,For PR code:1ZE,1ZP,1LJ			
1.6	75	05/03 → 08/12	**FCP1094**	ATE	For PR Number 1ZF,1ZM			
1.6	75	05/03 → 08/12	**FCP4223**	ATE	Disc Diam mm:345,For PR code:1ZK			
1.6	75	05/03 → 08/12				**FCP1491**	LUCAS/TRW	
1.6 E-Power	75	01/11 → 08/12	**FCP1094**	ATE				
1.6 E-Power	75	01/11 → 08/12	**FCP1641**	ATE	Disc Diam mm:312,For PR code:1ZD			
1.6 E-Power	75	01/11 → 08/12	**FCP4223**	ATE	Disc Diam mm:345,For PR code:1ZK			
1.6 E-Power	75	01/11 → 08/12				**FCP1491**	LUCAS/TRW	
1.6 FSI	85	08/03 → 09/07	**FCP1094**	ATE	For PR Number 1ZF,1ZM			
1.6 FSI	85	08/03 → 09/07	**FCP1641**	ATE	Disc Diam mm:312/288,For PR code:1ZE,1ZP,1LJ			
1.6 FSI	85	08/03 → 09/07	**FCP4223**	ATE	Disc Diam mm:345,For PR code:1ZK			
1.6 FSI	85	08/03 → 09/07				**FCP1491**	LUCAS/TRW	
1.6 TDI	66	05/09 → 08/12	**FCP1094**	ATE				
1.6 TDI	66	05/09 → 08/12	**FCP1641**	ATE	Disc Diam mm:312/288,For PR code:1ZE,1ZP,1LJ			
1.6 TDI	66	05/09 → 08/12	**FCP4223**	ATE	Disc Diam mm:345,For PR code:1ZK			
1.6 TDI	66	05/09 → 08/12				**FCP1491**	LUCAS/TRW	
1.6 TDI	77	05/09 → 08/12	**FCP1094**	ATE				
1.6 TDI	77	05/09 → 08/12	**FCP1641**	ATE	Disc Diam mm:312/288,For PR code:1ZA			
1.6 TDI	77	05/09 → 08/12	**FCP4223**	ATE	Disc Diam mm:345,For PR code:1ZK			
1.6 TDI	77	05/09 → 08/12				**FCP1491**	LUCAS/TRW	
1.8 TFSI	118	11/06 → 08/12	**FCP1641**	ATE	Disc Diam mm:312/288,For PR code:1ZE,1ZP,1LJ			
1.8 TFSI	118	11/06 → 08/12	**FCP4223**	ATE	Disc Diam mm:345,For PR code:1ZK			
1.8 TFSI	118	11/06 → 08/12				**FCP1491**	LUCAS/TRW	
1.8 TFSI quattro	118	07/08 → 08/12	**FCP1641**	ATE	Disc Diam mm:312/288,For PR code:1ZE,1ZP,1LJ			
1.8 TFSI quattro	118	07/08 → 08/12	**FCP4223**	ATE	Disc Diam mm:345,For PR code:1ZK			
1.8 TFSI quattro	118	07/08 → 08/12				**FCP1636**	LUCAS/TRW	For PR code:1KJ,For PR code-02:1X1
1.8 TFSI quattro	118	07/08 → 08/12				**FCP4316**	BOSCH	Disc Diam mm:272,For PR code:1KS
1.9 TDI	77	05/03 → 05/10	**FCP1094**	ATE	For PR Number 1ZF,1ZM			
1.9 TDI	77	05/03 → 05/10	**FCP1641**	ATE	Disc Diam mm:312/288,For PR code:1ZE,1ZP,1LJ			
1.9 TDI	77	05/03 → 05/10	**FCP4223**	ATE	Disc Diam mm:345,For PR code:1ZK			
1.9 TDI	77	05/03 → 05/10				**FCP1636**	LUCAS/TRW	
2.0 FSI	110	05/03 → 06/08	**FCP1641**	ATE	Disc Diam mm:312/288,For PR code:1ZE,1ZP,1LJ			
2.0 FSI	110	05/03 → 06/08	**FCP4223**	ATE	Disc Diam mm:345,For PR code:1ZK			
2.0 FSI	110	05/03 → 06/08				**FCP1491**	LUCAS/TRW	
2.0 TDI	100	05/03 → 08/12	**FCP1641**	ATE	Disc Diam mm:312/288,For PR code:1ZE,1ZP,1LJ			
2.0 TDI	100	05/03 → 08/12	**FCP4223**	ATE	Disc Diam mm:345,For PR code:1ZK			
2.0 TDI	100	05/03 → 08/12				**FCP1491**	LUCAS/TRW	
2.0 TDI	103	06/05 → 06/08	**FCP1641**	ATE	Disc Diam mm:312/288,For PR code:1ZE,1ZP,1LJ,1ZD			
2.0 TDI	103	06/05 → 06/08	**FCP4223**	ATE	Disc Diam mm:345,For PR code:1ZK			
2.0 TDI	103	06/05 → 06/08				**FCP1491**	LUCAS/TRW	
2.0 TDI	120	06/06 → 06/08	**FCP1641**	ATE	Disc Diam mm:312/288,For PR code:1ZE,1ZP,1LJ/1ZD			
2.0 TDI	120	06/06 → 06/08	**FCP4223**	ATE	Disc Diam mm:345,For PR code:1ZK			
2.0 TDI	120	06/06 → 06/08				**FCP1491**	LUCAS/TRW	
2.0 TDI 16V	103	05/03 → 08/12	**FCP1641**	ATE	Disc Diam mm:312/288,For PR code:1ZE,1ZP,1LJ			
2.0 TDI 16V	103	05/03 → 08/12	**FCP4223**	ATE	Disc Diam mm:345,For PR code:1ZK			
2.0 TDI 16V	103	05/03 → 08/12				**FCP1491**	LUCAS/TRW	
2.0 TDI 16V quattro	103	08/04 → 08/12	**FCP1641**	ATE	Disc Diam mm:312,For PR code:1ZD			
2.0 TDI 16V quattro	103	08/04 → 08/12	**FCP4223**	ATE	Disc Diam mm:345,For PR code:1ZK			
2.0 TDI 16V quattro	103	08/04 → 08/12				**FCP1636**	LUCAS/TRW	For PR code:1KF,1KJ,1X1
2.0 TDI 16V quattro	103	08/04 → 08/12				**FCP4316**	BOSCH	Disc Diam mm:272,For PR code:1KS
2.0 TDI quattro	103	01/06 → 06/08	**FCP1641**	ATE	Disc Diam mm:312/288,For PR:1ZE,1ZP,1LJ,1ZA,1ZD			
2.0 TDI quattro	103	01/06 → 06/08	**FCP4223**	ATE	Disc Diam mm:345,For PR code:1ZK			
2.0 TDI quattro	103	01/06 → 06/08				**FCP1636**	LUCAS/TRW	For PR code:1KF,1KJ,1X1
2.0 TDI quattro	125	03/06 → 08/12	**FCP1641**	ATE	Disc Diam mm:312/288,For PR code:1ZE,1ZP,1LJ			
2.0 TDI quattro	125	03/06 → 08/12	**FCP4223**	ATE	Disc Diam mm:345,For PR code:1ZK			
2.0 TDI quattro	125	03/06 → 08/12				**FCP1636**	LUCAS/TRW	For PR code:1KF,1KJ,1X1
2.0 TDI quattro	125	03/06 → 08/12				**FCP4316**	BOSCH	Disc Diam mm:272,For PR code:1KS
2.0 TFSI	147	09/04 → 08/12	**FCP1641**	ATE	Disc Diam mm:312/288,For PR code:1ZE,1ZP,1LJ			
2.0 TFSI	147	09/04 → 08/12	**FCP4223**	ATE	Disc Diam mm:345,For PR code:1ZK			
2.0 TFSI	147	09/04 → 08/12				**FCP1636**	LUCAS/TRW	For PR code:1X0/1KZ
2.0 TFSI	147	09/04 → 08/12				**FCP4316**	BOSCH	Disc Diam mm:272,For PR code:1KS
2.0 TFSI quattro	147	09/04 → 08/12	**FCP1641**	ATE	Disc Diam mm:312/288,For PR code:1ZE,1ZP,1LJ			
2.0 TFSI quattro	147	09/04 → 08/12	**FCP4223**	ATE	Disc Diam mm:345,For PR code:1ZK			
2.0 TFSI quattro	147	09/04 → 08/12				**FCP1636**	LUCAS/TRW	For PR code:1KF,1KJ,1X1
2.0 TFSI quattro	147	09/04 → 08/12				**FCP4316**	BOSCH	Disc Diam mm:272,For PR code:1KS
3.2 quattro	186	09/05 → 12/09	**FCP1765**	ATE				
3.2 quattro	186	09/05 → 12/09	**FCP4223**	ATE				
3.2 quattro	186	09/05 → 12/09				**FCP1636**	LUCAS/TRW	
3.2 V6 quattro	184	07/03 → 05/09	**FCP1765**	ATE	Disc Diam mm:345,For PR code:1LK			
3.2 V6 quattro	184	07/03 → 05/09	**FCP4223**	ATE	Disc Diam mm:345,For PR code:1ZK			
3.2 V6 quattro	184	07/03 → 05/09				**FCP1636**	LUCAS/TRW	For PR code:1KF,1KJ,1X1

For material availability see page 16-18 / Per la disponibilità materiali vedere a pagina 16-18

...AUDI										
		kW				NOTE				NOTE
...A3 (8P1)										
S3 quattro	188	02/07 → 08/12	**FCP1765**	ATE					
S3 quattro	188	02/07 → 08/12	**FCP4223**	ATE	Disc Diam mm:345,For PR code:1ZK				
S3 quattro	188	02/07 → 08/12				**FCP1636**	LUCAS/TRW	For PR code:1KJ,For PR code-02:1X1
S3 quattro	188	02/07 → 08/12				**FCP4316**	BOSCH	
S3 quattro	195	11/06 → 08/12	**FCP1765**	ATE				
S3 quattro	195	11/06 → 08/12	**FCP4223**	ATE	Disc Diam mm:345,For PR code:1ZK			
S3 quattro	195	11/06 → 08/12				**FCP1636**	LUCAS/TRW	For PR code:1KJ,For PR code-02:1X1
S3 quattro	195	11/06 → 08/12				**FCP4316**	BOSCH	
A3 (8V1)										
S3 quattro	206	02/13 →	**FCP4425**	LUCAS/TRW					
S3 quattro	206	02/13 →				**FCP4697**	ATE	Disc Diam mm:310,For PR code:1KJ
S3 quattro	210	05/14 →	**FCP4425**	LUCAS/TRW					
S3 quattro	210	05/14 →				**FCP4697**	ATE	For PR code:1KY/1KJ
S3 quattro	221	11/12 →	**FCP4425**	LUCAS/TRW					
S3 quattro	221	11/12 →				**FCP4697**	ATE	Disc Diam mm:310,For PR code:1KJ
A3 (8V1, 8VK)										
1.0 TFSI	85	07/16 →	**FCP4433**	TRW	Disc Diam mm:288,For PR code:1ZE				
1.0 TFSI	85	07/16 →				**FCP4434**	ATE	Disc Diam mm:272,For PR code:1KE
1.2 TFSI	77	02/13 →	**FCP4433**	LUCAS/TRW					
1.2 TFSI	77	02/13 →				**FCP4697**	ATE	Disc Diam mm:310,For PR code:1KY
1.2 TFSI	77	02/13 →				**FCP4434**	ATE	Disc Diam mm:272,For PR code:1KE
1.2 TFSI	81	05/14 →	**FCP4433**	LUCAS/TRW					
1.2 TFSI	81	05/14 →				**FCP4697**	ATE	Disc Diam mm:310,For PR code:1KY
1.2 TFSI	81	05/14 →				**FCP4434**	ATE	Disc Diam mm:272,For PR code:1KE
1.4 TFSI	103	10/12 →	**FCP4433**	LUCAS/TRW					
1.4 TFSI	103	03/13 →				**FCP4697**	ATE	Disc Diam mm:310,For PR code:1KY
1.4 TFSI	103	03/13 →				**FCP4434**	ATE	Disc Diam mm:272,For PR code:1KE
1.4 TFSI	110	05/14 →	**FCP4433**	LUCAS/TRW					
1.4 TFSI	110	05/14 →				**FCP4697**	ATE	Disc Diam mm:310,For PR code:1KY
1.4 TFSI	110	05/14 →				**FCP4434**	ATE	Disc Diam mm:272,For PR code:1KE
1.4 TFSI	90	04/12 →	**FCP4433**	LUCAS/TRW					
1.4 TFSI	90	04/12 →				**FCP4697**	ATE	Disc Diam mm:310,For PR code:1KY
1.4 TFSI	90	04/12 →				**FCP4434**	ATE	Disc Diam mm:272,For PR code:1KE
1.4 TFSI	92	05/14 →	**FCP4433**	LUCAS/TRW					
1.4 TFSI	92	05/14 →				**FCP4697**	ATE	Disc Diam mm:310,For PR code:1KY
1.4 TFSI	92	05/14 →				**FCP4434**	ATE	Disc Diam mm:272,For PR code:1KE
1.6 TDI	77	10/12 →	**FCP4433**	LUCAS/TRW					
1.6 TDI	77	10/12 →				**FCP4697**	ATE	Disc Diam mm:310,For PR code:1KY
1.6 TDI	77	10/12 →				**FCP4434**	ATE	Disc Diam mm:272,For PR code:1KE
1.6 TDI	81	09/13 →	**FCP4433**	LUCAS/TRW					
1.6 TDI	81	09/13 →				**FCP4697**	ATE	Disc Diam mm:310,For PR code:1KY
1.6 TDI	81	09/13 →				**FCP4434**	ATE	Disc Diam mm:272,For PR code:1KE
1.6 TDI	85	02/17 →	**FCP4433**	TRW	Disc Diam mm:288,For PR code:1ZE				
1.6 TDI	85	02/17 →				**FCP4434**	ATE	Disc Diam mm:272,For PR code:1KE/1KR
1.8 TFSI	132	04/12 →	**FCP4433**	LUCAS/TRW					
1.8 TFSI	132	04/12 →				**FCP4697**	ATE	Disc Diam mm:310,For PR code:1KY
1.8 TFSI	132	04/12 →				**FCP4434**	ATE	Disc Diam mm:272,For PR code:1KE
1.8 TFSI quattro	132	08/12 →	**FCP4433**	LUCAS/TRW					
1.8 TFSI quattro	132	08/12 →				**FCP4434**	ATE	Disc Diam mm:272,For PR code:1KE
2.0 TDI	100	05/13 →	**FCP4433**	LUCAS/TRW					
2.0 TDI	100	05/13 →				**FCP4697**	ATE	Disc Diam mm:310,For PR code:1KY
2.0 TDI	100	05/13 →				**FCP4434**	ATE	Disc Diam mm:272,For PR code:1KE
2.0 TDI	105	09/12 →	**FCP4433**	LUCAS/TRW					
2.0 TDI	105	09/12 →				**FCP4697**	ATE	Disc Diam mm:310,For PR code:1KY
2.0 TDI	105	09/12 →				**FCP4434**	ATE	Disc Diam mm:272,For PR code:1KE
2.0 TDI	110	04/12 →	**FCP4433**	LUCAS/TRW					
2.0 TDI	110	04/12 →				**FCP4697**	ATE	Disc Diam mm:310,For PR code:1KY
2.0 TDI	110	04/12 →				**FCP4434**	ATE	Disc Diam mm:272,For PR code:1KE
2.0 TDI	135	05/13 →	**FCP4433**	LUCAS/TRW					
2.0 TDI	135	05/13 →				**FCP4697**	ATE	Disc Diam mm:310,For PR code:1KY
2.0 TDI	135	05/13 →				**FCP4434**	ATE	Disc Diam mm:272,For PR code:1KE
2.0 TDI	81	01/13 →	**FCP4433**	LUCAS/TRW					
2.0 TDI	81	01/13 →				**FCP4697**	ATE	Disc Diam mm:310,For PR code:1KY
2.0 TDI	81	01/13 →				**FCP4434**	ATE	Disc Diam mm:272,For PR code:1KE
2.0 TDI quattro	110	10/12 →	**FCP4433**	LUCAS/TRW					
2.0 TDI quattro	110	10/12 →				**FCP4434**	ATE	Disc Diam mm:272,For PR code:1KE
2.0 TDI quattro	135	12/12 →	**FCP4433**	LUCAS/TRW					
2.0 TDI quattro	135	12/12 →				**FCP4697**	ATE	Disc Diam mm:310,For PR code:1KY
2.0 TDI quattro	135	12/12 →				**FCP4434**	ATE	Disc Diam mm:272,For PR code:1KE
2.0 TFSI	140	05/16 →	**FCP4433**	TRW	Disc Diam mm:288,For PR code:1ZE				
2.0 TFSI	140	05/16 →				**FCP4434**	ATE	Disc Diam mm:272,For PR code:1KE
2.0 TFSI quattro	140	05/16 →	**FCP4433**	TRW	Disc Diam mm:288,For PR code:1ZE				
2.0 TFSI quattro	140	05/16 →				**FCP4434**	ATE	Disc Diam mm:272,For PR code:1KE

For material availability see page 16-18 / Per la disponibilità materiali vedere a pagina 16-18

...AUDI

	kW				NOTE			NOTE
A3 Cabrio (8P7)								
1.2 TFSi 8v	77	03/10 →	FCP1094	ATE	PR 1ZF			
1.2 TFSi 8v	77	03/10 →	FCP1641	ATE	PR 1ZE/1LJ			
1.2 TFSi 8v	77	03/10 →				FCP4316	BOSCH	
1.4 TFSi 16v	92	02/11 →	FCP1094	ATE	PR 1ZF			
1.4 TFSi 16v	92	02/11 →	FCP1641	ATE	PR 1ZE/1LJ			
1.4 TFSi 16v	92	02/11 →				FCP4316	BOSCH	
1.6 8v	75	09/08 → 05/10	FCP1094	ATE	PR 1ZF			
1.6 8v	75	09/08 → 05/10	FCP1641	ATE	PR 1ZE/1LJ			
1.6 8v	75	09/08 → 05/10				FCP4316	BOSCH	
1.6 TDi 16v	77	05/09 →	FCP1094	ATE	PR 1ZF			
1.6 TDi 16v	77	05/09 →	FCP1641	ATE	PR 1ZE/1LJ			
1.6 TDi 16v	77	05/09 →				FCP4316	BOSCH	
1.8 FSi/TFSi 16v	118	04/08 →	FCP1094	ATE	PR 1ZF			
1.8 FSi/TFSi 16v	118	04/08 →	FCP1641	ATE	PR 1ZE/1LJ			
1.8 FSi/TFSi 16v	118	04/08 →				FCP4316	BOSCH	
1.9 TDi 8v	77	04/08 → 10/09	FCP1094	ATE	PR 1ZF			
1.9 TDi 8v	77	04/08 → 10/09	FCP1641	ATE	PR 1ZE/1LJ			
1.9 TDi 8v	77	04/08 → 10/09				FCP4316	BOSCH	
2.0 FSi/TFSi 16v	147	04/08 →	FCP1094	ATE	PR 1ZF			
2.0 FSi/TFSi 16v	147	04/08 →	FCP1641	ATE	PR 1ZE/1LJ			
2.0 FSi/TFSi 16v	147	04/08 →				FCP4316	BOSCH	
2.0 TDi 16v	100	04/08 → 05/13	FCP1094	ATE	PR 1ZF			
2.0 TDi 16v	100	04/08 → 05/13	FCP1641	ATE	PR 1ZE/1LJ			
2.0 TDi 16v	100	04/08 → 05/13				FCP4316	BOSCH	
2.0 TDi 16v	103	04/08 →	FCP1094	ATE	PR 1ZF			
2.0 TDi 16v	103	04/08 →	FCP1641	ATE	PR 1ZE/1LJ			
2.0 TDi 16v	103	04/08 →				FCP4316	BOSCH	
A3 Convertible (8V7)								
S3 quattro	221	04/14 →	FCP4425	LUCAS/TRW				
S3 quattro	221	04/14 →				FCP4697	ATE	Disc Diam mm:310,For PR code:1KJ
A3 Convertible (8V7, 8VE)								
1.4 TFSI	103	10/13 →	FCP4433	LUCAS/TRW				
1.4 TFSI	103	10/13 →				FCP4697	ATE	Disc Diam mm:310,For PR code:1KY
1.4 TFSI	103	10/13 →				FCP4434	ATE	Disc Diam mm:272,For PR code:1KE
1.4 TFSI	110	05/14 →	FCP4433	LUCAS/TRW				
1.4 TFSI	110	05/14 →				FCP4697	ATE	Disc Diam mm:310,For PR code:1KY
1.4 TFSI	110	05/14 →				FCP4434	ATE	Disc Diam mm:272,For PR code:1KE
1.4 TFSI	85	02/16 →	FCP4433	TRW	Disc Diam mm:288,For PR code:1ZE			
1.4 TFSI	85	02/16 →				FCP4434	ATE	Disc Diam mm:272,For PR code:ZKE
1.4 TFSI	92	02/14 →	FCP4433	LUCAS/TRW				
1.4 TFSI	92	02/14 →				FCP4697	ATE	Disc Diam mm:310,For PR code:1KY
1.4 TFSI	92	02/14 →				FCP4434	ATE	Disc Diam mm:272,For PR code:1KE
1.6 TDI	81	02/14 →	FCP4433	LUCAS/TRW				
1.6 TDI	81	02/14 →				FCP4697	ATE	Disc Diam mm:310,For PR code:1KY
1.6 TDI	81	02/14 →				FCP4434	ATE	Disc Diam mm:272,For PR code:1KE
1.8 TFSI	125	05/14 →	FCP4433	LUCAS/TRW				
1.8 TFSI	125	05/14 →				FCP4697	ATE	For PR code:1KY/1KJ
1.8 TFSI	125	05/14 →				FCP4434	ATE	For PR code:1KE
1.8 TFSI	132	10/13 →	FCP4433	LUCAS/TRW				
1.8 TFSI	132	10/13 →				FCP4697	ATE	Disc Diam mm:310,For PR code:1KY
1.8 TFSI	132	10/13 →				FCP4434	ATE	Disc Diam mm:272,For PR code:1KE
1.8 TFSI quattro	132	03/14 →	FCP4433	LUCAS/TRW				
1.8 TFSI quattro	132	03/14 →				FCP4697	ATE	Disc Diam mm:310,For PR code:1KY
1.8 TFSI quattro	132	03/14 →				FCP4434	ATE	Disc Diam mm:272,For PR code:1KE
2.0 TDI	100	10/13 →	FCP4433	LUCAS/TRW				
2.0 TDI	100	10/13 →				FCP4697	ATE	Disc Diam mm:310,For PR code:1KY
2.0 TDI	100	10/13 →				FCP4434	ATE	Disc Diam mm:272,For PR code:1KE
2.0 TDI	110	10/13 →	FCP4433	LUCAS/TRW				
2.0 TDI	110	10/13 →				FCP4697	ATE	Disc Diam mm:310,For PR code:1KY
2.0 TDI	110	10/13 →				FCP4434	ATE	Disc Diam mm:272,For PR code:1KE
2.0 TDI	135	05/14 →	FCP4433	LUCAS/TRW				
2.0 TDI	135	05/14 →				FCP4697	ATE	Disc Diam mm:310,For PR code:1KY
2.0 TDI	135	05/14 →				FCP4434	ATE	Disc Diam mm:272,For PR code:1KE
2.0 TDI quattro	110	03/14 →	FCP4433	LUCAS/TRW				
2.0 TDI quattro	110	03/14 →				FCP4697	ATE	Disc Diam mm:310,For PR code:1KY
2.0 TDI quattro	110	03/14 →				FCP4434	ATE	Disc Diam mm:272,For PR code:1KE
2.0 TDI quattro	135	05/14 →	FCP4433	LUCAS/TRW				
2.0 TDI quattro	135	05/14 →				FCP4697	ATE	Disc Diam mm:310,For PR code:1KY
2.0 TDI quattro	135	05/14 →				FCP4434	ATE	Disc Diam mm:272,For PR code:1KE
2.0 TFSI	140	05/16 →	FCP4433	TRW	Disc Diam mm:288,For PR code:1ZE			
2.0 TFSI	140	05/16 →				FCP4434	ATE	Disc Diam mm:272,For PR code:1KE
2.0 TFSI	155	10/13 →	FCP4433	TRW				
2.0 TFSI	155	10/13 →				FCP4434	ATE	
2.0 TFSI quattro	140	05/16 →	FCP4433	TRW	Disc Diam mm:288,For PR code:1ZE			
2.0 TFSI quattro	140	05/16 →				FCP4434	ATE	Disc Diam mm:272,For PR code:1KE

For material availability see page 16-18 / Per la disponibilità materiali vedere a pagina 16-18

...AUDI	kW				NOTE			NOTE
...A3 Convertible (8V7, 8VE)								
2.0 TFSI quattro	162	05/14 →	FCP4433	TRW	Disc Diam mm:312,For PR code:1ZD			
2.0 TFSI quattro	162	05/14 →				FCP4434	ATE	Disc Diam mm:272,For PR code:1KE
A3 Limousine (8VS)								
S3 quattro	206	10/13 →	FCP4433	LUCAS/TRW				
S3 quattro	206	10/13 →				FCP4697	ATE	Disc Diam mm:310,For PR code:1KJ
S3 quattro	210	05/14 →	FCP4433	LUCAS/TRW				
S3 quattro	210	05/14 →				FCP4697	ATE	For PR code:1KY/1KJ
S3 quattro	221	10/13 →	FCP4433	LUCAS/TRW				
S3 quattro	221	10/13 →				FCP4697	ATE	Disc Diam mm:310,For PR code:1KJ
A3 Limousine (8VS, 8VM)								
1.0 TFSI	85	07/16 →	FCP4433	TRW	Disc Diam mm:288,For PR code:1ZE			
1.0 TFSI	85	07/16 →				FCP4434	ATE	Disc Diam mm:272,For PR code:1KE
1.2 TFSI	77	10/13 →	FCP4433	TRW	For PR code:1ZE			
1.2 TFSI	77	10/13 →				FCP4434	ATE	For PR code:1KE
1.2 TFSI	81	05/14 →	FCP4433	LUCAS/TRW				
1.2 TFSI	81	05/14 →				FCP4697	ATE	For PR code:2ED;1KY/1KJ
1.2 TFSI	81	05/14 →				FCP4434	ATE	For PR code:1KE
1.4 TFSI	103	05/13 →	FCP4433	LUCAS/TRW				
1.4 TFSI	103	05/13 →				FCP4697	ATE	Disc Diam mm:310,For PR code:1KJ/1KY
1.4 TFSI	103	05/13 →				FCP4434	ATE	Disc Diam mm:272,For PR code:1KE
1.4 TFSI	110	05/14 →	FCP4433	LUCAS/TRW				
1.4 TFSI	110	05/14 →				FCP4697	ATE	Disc Diam mm:310,For PR code:1KY
1.4 TFSI	110	05/14 →				FCP4434	ATE	Disc Diam mm:272,For PR code:1KE
1.4 TFSI	90	09/13 →	FCP4433	LUCAS/TRW				
1.4 TFSI	90	09/13 →				FCP4697	ATE	Disc Diam mm:310,For PR code:1KY
1.4 TFSI	90	09/13 →				FCP4434	ATE	Disc Diam mm:272,For PR code:1KE
1.4 TFSI	92	09/13 →	FCP4433	LUCAS/TRW				
1.4 TFSI	92	09/13 →				FCP4697	ATE	Disc Diam mm:310,For PR code:1KY
1.4 TFSI	92	09/13 →				FCP4434	ATE	Disc Diam mm:272,For PR code:1KE
1.4 TFSI Flex	110	01/17 →	FCP4433	TRW				
1.4 TFSI Flex	110	01/17 →				FCP4434	ATE	
1.5 TFSI	110	05/17 →	FCP4433	TRW	Disc Diam mm:288,For PR code:1ZE			
1.5 TFSI	110	05/17 →				FCP4434	ATE	Disc Diam mm:272,For PR code:1KE
1.6 TDI	77	09/13 →	FCP4433	LUCAS/TRW				
1.6 TDI	77	09/13 →				FCP4697	ATE	Disc Diam mm:310,For PR code:1KY
1.6 TDI	77	09/13 →				FCP4434	ATE	Disc Diam mm:272,For PR code:1KE
1.6 TDI	81	05/14 →	FCP4433	LUCAS/TRW				
1.6 TDI	81	05/14 →				FCP4697	ATE	Disc Diam mm:310,For PR code:1KY
1.6 TDI	81	05/14 →				FCP4434	ATE	Disc Diam mm:272,For PR code:1KE
1.6 TDI	85	03/17 →	FCP4433	TRW	Disc Diam mm:288,For PR code:1ZE			
1.6 TDI	85	03/17 →				FCP4434	ATE	Disc Diam mm:272,For PR code:1KE/1KR
1.6 TDI quattro	81	05/15 →	FCP4433	LUCAS/TRW	Pr Number 1ZE			
1.6 TDI quattro	81	05/15 →				FCP4697	ATE	For PR code:1KY/1KJ/2ED
1.6 TDI quattro	81	05/15 →				FCP4434	ATE	For PR code:1KE
1.8 TFSI	125	11/13 →	FCP4433	LUCAS/TRW				
1.8 TFSI	125	11/13 →				FCP4697	ATE	For PR code:2ED;1KY/1KJ
1.8 TFSI	125	11/13 →				FCP4434	ATE	For PR code:1KE
1.8 TFSI	132	05/13 →	FCP4433	LUCAS/TRW				
1.8 TFSI	132	05/13 →				FCP4697	ATE	Disc Diam mm:310,For PR code:1KY
1.8 TFSI	132	05/13 →				FCP4434	ATE	Disc Diam mm:272,For PR code:1KE
1.8 TFSI quattro	132	11/13 →	FCP4433	LUCAS/TRW				
1.8 TFSI quattro	132	11/13 →				FCP4697	ATE	Disc Diam mm:310,For PR code:1KY
1.8 TFSI quattro	132	11/13 →				FCP4434	ATE	Disc Diam mm:272,For PR code:1KE
2.0 TDI	100	09/13 →	FCP4433	LUCAS/TRW				
2.0 TDI	100	09/13 →				FCP4697	ATE	Disc Diam mm:310,For PR code:1KY
2.0 TDI	100	09/13 →				FCP4434	ATE	Disc Diam mm:272,For PR code:1KE
2.0 TDI	105	10/13 →	FCP4433	LUCAS/TRW				
2.0 TDI	105	10/13 →				FCP4697	ATE	Disc Diam mm:310,For PR code:1KY
2.0 TDI	105	10/13 →				FCP4434	ATE	Disc Diam mm:272,For PR code:1KE
2.0 TDI	110	05/13 →	FCP4433	LUCAS/TRW				
2.0 TDI	110	05/13 →				FCP4697	ATE	Disc Diam mm:310,For PR code:1KY
2.0 TDI	110	05/13 →				FCP4434	ATE	Disc Diam mm:272,For PR code:1KE
2.0 TDI	135	05/14 →	FCP4433	LUCAS/TRW				
2.0 TDI	135	05/14 →				FCP4697	ATE	Disc Diam mm:310,For PR code:1KY
2.0 TDI	135	05/14 →				FCP4434	ATE	Disc Diam mm:272,For PR code:1KE
2.0 TDI	81	05/13 →	FCP4433	LUCAS/TRW				
2.0 TDI	81	05/13 →				FCP4697	ATE	Disc Diam mm:310,For PR code:1KY
2.0 TDI	81	05/13 →				FCP4434	ATE	Disc Diam mm:272,For PR code:1KE
2.0 TDI quattro	110	10/13 →				FCP4434	ATE	Disc Diam mm:272,For PR code:1KE
2.0 TDI quattro	135	05/14 →	FCP4433	LUCAS/TRW				
2.0 TDI quattro	135	05/14 →				FCP4697	ATE	Disc Diam mm:310,For PR code:1KY
2.0 TDI quattro	135	05/14 →				FCP4434	ATE	Disc Diam mm:272,For PR code:1KE
2.0 TFSI	140	05/16 →	FCP4433	TRW	Disc Diam mm:288,For PR code:1ZE			
2.0 TFSI	140	05/16 →				FCP4434	ATE	Disc Diam mm:272,For PR code:1KE
2.0 TFSI	162	11/15 →	FCP4433	TRW	Disc Diam mm:288,For PR code:1ZE			

For material availability see page 16-18 / Per la disponibilità materiali vedere a pagina 16-18

...AUDI	kW				NOTE			NOTE
...A3 Limousine (8VS, 8VM)								
2.0 TFSI	162	11/15 →				FCP4434	ATE	Disc Diam mm:272,For PR code:1KE
2.0 TFSI Flex	162	01/17 →	FCP4433	TRW				
2.0 TFSI Flex	162	01/17 →				FCP4434	ATE	
2.0 TFSI quattro	140	05/16 →	FCP4433	TRW	Disc Diam mm:288,For PR code:1ZE			
2.0 TFSI quattro	140	05/16 →				FCP4434	ATE	Disc Diam mm:272,For PR code:1KE
2.0 TFSI quattro	162	11/13 →	FCP4433	TRW				
2.0 TFSI quattro	162	11/13 →				FCP4434	ATE	
A3 Sportback (8PA)								
1.2 TSI	77	04/10 → 03/13	FCP1094	ATE				
1.2 TSI	77	04/10 → 03/13	FCP1641	ATE	Disc Diam mm:312/288,For PR code:1ZE,1ZP,1LJ			
1.2 TSI	77	04/10 → 03/13	FCP4223	ATE	Disc Diam mm:345,For PR code:1ZK			
1.2 TSI	77	04/10 → 03/13				FCP1491	LUCAS/TRW	
1.4 TFSI	92	09/07 → 03/13	FCP1641	ATE	Disc Diam mm:312/288,For PR code:1ZE,1ZP,1LJ			
1.4 TFSI	92	09/07 → 03/13	FCP4223	ATE	Disc Diam mm:345,For PR code:1ZK			
1.4 TFSI	92	09/07 → 03/13				FCP1491	LUCAS/TRW	
1.6	75	09/04 → 03/13	FCP1094	ATE				
1.6	75	09/04 → 03/13	FCP1641	ATE	Disc Diam mm:312/288,For PR code:1ZE,1ZP,1LJ			
1.6	75	09/04 → 03/13	FCP4223	ATE	Disc Diam mm:345,For PR code:1ZK			
1.6	75	09/04 → 03/13				FCP1491	LUCAS/TRW	
1.6 E-Power	75	01/11 → 03/13	FCP1094	ATE				
1.6 E-Power	75	01/11 → 03/13	FCP1641	ATE	Disc Diam mm:312/288,For PR code:1ZE,1ZP,1LJ			
1.6 E-Power	75	01/11 → 03/13	FCP4223	ATE	Disc Diam mm:345,For PR code:1ZK			
1.6 E-Power	75	01/11 → 03/13				FCP1491	LUCAS/TRW	
1.6 FSI	85	09/04 → 09/07	FCP1094	ATE				
1.6 FSI	85	09/04 → 09/07	FCP1641	ATE	Disc Diam mm:312/288,For PR code:1ZE,1ZP,1LJ,1ZD			
1.6 FSI	85	09/04 → 09/07	FCP4223	ATE	Disc Diam mm:345,For PR code:1ZK			
1.6 FSI	85	09/04 → 09/07				FCP1491	LUCAS/TRW	
1.6 FSI	85	09/04 → 09/07				FCP1636	LUCAS/TRW	
1.6 TDI	66	05/09 → 03/13	FCP1094	ATE				
1.6 TDI	66	05/09 → 03/13	FCP1641	ATE	Disc Diam mm:312/288,For PR code:1ZE,1ZP,1LJ			
1.6 TDI	66	05/09 → 03/13	FCP4223	ATE	Disc Diam mm:345,For PR code:1ZK			
1.6 TDI	66	05/09 → 03/13				FCP1491	LUCAS/TRW	
1.6 TDI	77	05/09 → 03/13	FCP1094	ATE				
1.6 TDI	77	05/09 → 03/13	FCP1641	ATE	Disc Diam mm:312/288,For PR code:1ZE,1ZP,1LJ			
1.6 TDI	77	05/09 → 03/13	FCP4223	ATE	Disc Diam mm:345,For PR code:1ZK			
1.6 TDI	77	05/09 → 03/13				FCP1491	LUCAS/TRW	
1.8 TFSI	118	11/06 → 03/13	FCP1641	ATE	Disc Diam mm:312/288,For PR code:1ZE,1ZP,1LJ			
1.8 TFSI	118	11/06 → 03/13	FCP4223	ATE	Disc Diam mm:345,For PR code:1ZK			
1.8 TFSI	118	11/06 → 03/13				FCP1491	LUCAS/TRW	
1.8 TFSI quattro	118	07/08 → 03/13	FCP1641	ATE	Disc Diam mm:312/288,For PR code:1ZE,1ZP,1LJ			
1.8 TFSI quattro	118	07/08 → 03/13	FCP4223	ATE	Disc Diam mm:345,For PR code:1ZK			
1.8 TFSI quattro	118	07/08 → 03/13				FCP1636	LUCAS/TRW	For PR code:1KJ,For PR code-02:1X1
1.8 TFSI quattro	118	07/08 → 03/13				FCP4316	BOSCH	Disc Diam mm:272,For PR code:1KS
1.9 TDI	77	09/04 → 05/10	FCP1094	ATE				
1.9 TDI	77	09/04 → 05/10	FCP1641	ATE	Disc Diam mm:312/288,For PR code:1ZE,1ZP,1LJ			
1.9 TDI	77	09/04 → 05/10	FCP4223	ATE	Disc Diam mm:345,For PR code:1ZK			
1.9 TDI	77	09/04 → 05/10				FCP1636	LUCAS/TRW	
2.0 FSI	110	09/04 → 06/08	FCP1641	ATE	Disc Diam mm:312/288,For PR code:1ZE,1ZP,1LJ,1ZD			
2.0 FSI	110	09/04 → 06/08	FCP4223	ATE	Disc Diam mm:345,For PR code:1ZK			
2.0 FSI	110	09/04 → 06/08				FCP1491	LUCAS/TRW	
2.0 FSI	110	09/04 → 06/08				FCP1636	LUCAS/TRW	
2.0 TDI	100	09/04 → 03/13	FCP1641	ATE	Disc Diam mm:312/288,For PR code:1ZE,1ZP,1LJ			
2.0 TDI	100	09/04 → 03/13	FCP4223	ATE	Disc Diam mm:345,For PR code:1ZK			
2.0 TDI	100	09/04 → 03/13				FCP1491	LUCAS/TRW	
2.0 TDI	103	06/05 → 06/08	FCP1641	ATE	Disc Diam mm:312/288,For PR code:1ZE,1ZP,1LJ,1ZD			
2.0 TDI	103	06/05 → 06/08	FCP4223	ATE	Disc Diam mm:345,For PR code:1ZK			
2.0 TDI	103	06/05 → 06/08				FCP541	LUCAS/TRW	260mm disc
2.0 TDI	103	06/05 → 06/08				FCP1491	LUCAS/TRW	
2.0 TDI	103	06/05 → 06/08				FCP1636	LUCAS/TRW	PR 1KF,1KJ,1KZ (255mm disc)
2.0 TDI	104	01/10 → 03/13	FCP1641	ATE				
2.0 TDI	104	01/10 → 03/13	FCP4223	ATE				
2.0 TDI	104	01/10 → 03/13				FCP1636	LUCAS/TRW	
2.0 TDI	120	06/06 → 06/08	FCP1641	ATE	Disc Diam mm:312/288,For PR code:1ZE,1ZP,1LJ/1ZD			
2.0 TDI	120	06/06 → 06/08	FCP4223	ATE	Disc Diam mm:345,For PR code:1ZK			
2.0 TDI	120	06/06 → 06/08				FCP1491	LUCAS/TRW	
2.0 TDI 16V	103	09/04 → 03/13	FCP1641	ATE	Disc Diam mm:312/288,For PR code:1ZE,1ZP,1LJ			
2.0 TDI 16V	103	09/04 → 03/13	FCP4223	ATE	Disc Diam mm:345,For PR code:1ZK			
2.0 TDI 16V	103	09/04 → 03/13				FCP1491	LUCAS/TRW	
2.0 TDI 16V quattro	103	11/05 → 03/13	FCP1641	ATE	Disc Diam mm:312/288,For PR code:1ZE,1ZP,1LJ			
2.0 TDI 16V quattro	103	11/05 → 03/13	FCP4223	ATE	Disc Diam mm:345,For PR code:1ZK			
2.0 TDI 16V quattro	103	11/05 → 03/13				FCP1636	LUCAS/TRW	For PR code:1KF,1KJ,1X1
2.0 TDI 16V quattro	103	11/05 → 03/13				FCP4316	BOSCH	Disc Diam mm:272,For PR code:1KS
2.0 TDI quattro	103	01/06 → 06/08	FCP1641	ATE	Disc Diam mm:312/288,For PR 1ZE,1ZP,1LJ,1ZA,1ZD			
2.0 TDI quattro	103	01/06 → 06/08	FCP4223	ATE	Disc Diam mm:345,For PR code:1ZK			
2.0 TDI quattro	103	01/06 → 06/08				FCP1636	LUCAS/TRW	For PR code:1KF,1KJ,1X1
2.0 TDI quattro	125	03/06 → 03/13	FCP1641	ATE	Disc Diam mm:312/288,For PR code:1ZE,1ZP,1LJ			

For material availability see page 16-18 / Per la disponibilità materiali vedere a pagina 16-18

...AUDI	kW				NOTE			NOTE
...A3 Sportback (8PA)								
2.0 TDI quattro	125	03/06 → 03/13	**FCP4223**	ATE	Disc Diam mm:345,For PR code:1ZK			
2.0 TDI quattro	125	03/06 → 03/13				**FCP1636**	LUCAS/TRW	For PR code:1KF,1KJ,1X1
2.0 TDI quattro	125	03/06 → 03/13				**FCP4316**	BOSCH	Disc Diam mm:272,For PR code:1KS
2.0 TFSI	147	09/04 → 03/13	**FCP1641**	ATE	Disc Diam mm:312/288,For PR code:1ZE,1ZP,1LJ			
2.0 TFSI	147	09/04 → 03/13	**FCP4223**	ATE	Disc Diam mm:345,For PR code:1ZK			
2.0 TFSI	147	09/04 → 03/13				**FCP1636**	LUCAS/TRW	For PR code:1X0/1KZ
2.0 TFSI	147	09/04 → 03/13				**FCP4316**	BOSCH	Disc Diam mm:272,For PR code:1KS
2.0 TFSI quattro	147	09/04 → 03/13	**FCP1641**	ATE	Disc Diam mm:312/288,For PR code:1ZE,1ZP,1LJ			
2.0 TFSI quattro	147	09/04 → 03/13	**FCP4223**	ATE	Disc Diam mm:345,For PR code:1ZK			
2.0 TFSI quattro	147	09/04 → 03/13				**FCP1636**	LUCAS/TRW	For PR code:1KF,1KJ,1X1
2.0 TFSI quattro	147	09/04 → 03/13				**FCP4316**	BOSCH	Disc Diam mm:272,For PR code:1KS
3.2 V6 quattro	184	09/04 → 05/09	**FCP1765**	ATE	Disc Diam mm:345,For PR code:1LK			
3.2 V6 quattro	184	09/04 → 05/09	**FCP4223**	ATE	Disc Diam mm:345,For PR code:1ZK			
3.2 V6 quattro	184	09/04 → 05/09				**FCP1636**	LUCAS/TRW	For PR code:1KF,1KJ,1X1
RS3 quattro	250	01/11 → 12/12	**FCP1334**	BREMBO				
RS3 quattro	250	01/11 → 12/12				**FCP1636**	LUCAS/TRW	
S3 quattro	188	07/08 → 03/13	**FCP4223**	ATE	Disc Diam mm:345,For PR code:1ZK			
S3 quattro	188	07/08 → 03/13				**FCP1636**	LUCAS/TRW	For PR code:1KJ,For PR code-02:1X1
S3 quattro	195	06/08 → 03/13	**FCP4223**	ATE	Disc Diam mm:345,For PR code:1ZK			
S3 quattro	195	06/08 → 03/13				**FCP1636**	LUCAS/TRW	For PR code:1KJ,For PR code-02:1X1
A3 Sportback (8VA)								
S3 quattro	206	05/13 →	**FCP4425**	LUCAS/TRW				
S3 quattro	206	05/13 →				**FCP4697**	ATE	Disc Diam mm:310,For PR code:1KJ
S3 quattro	210	05/14 →	**FCP4433**	LUCAS/TRW				
S3 quattro	210	05/14 →				**FCP4697**	ATE	For PR code:1KY/1KJ
S3 quattro	221	11/12 →	**FCP4425**	LUCAS/TRW				
S3 quattro	221	11/12 →				**FCP4697**	ATE	Disc Diam mm:310,For PR code:1KJ
A3 Sportback (8VA, 8VF)								
1.0 TFSI	85	07/16 →	**FCP4433**	TRW	Disc Diam mm:288,For PR code:1ZE			
1.0 TFSI	85	07/16 →				**FCP4434**	ATE	Disc Diam mm:272,For PR code:1KE
1.2 TFSI	77	05/13 →	**FCP4433**	LUCAS/TRW				
1.2 TFSI	77	05/13 →				**FCP4697**	ATE	Disc Diam mm:310,For PR code:1KY
1.2 TFSI	77	05/13 →				**FCP4434**	ATE	Disc Diam mm:272,For PR code:1KE
1.2 TFSI	81	05/14 →	**FCP4433**	LUCAS/TRW				
1.2 TFSI	81	05/14 →				**FCP4697**	ATE	Disc Diam mm:310,For PR code:1KY
1.2 TFSI	81	05/14 →				**FCP4434**	ATE	Disc Diam mm:272,For PR code:1KE
1.4 TFSI	103	03/13 →	**FCP4433**	LUCAS/TRW				
1.4 TFSI	103	03/13 →				**FCP4697**	ATE	Disc Diam mm:310,For PR code:1KY
1.4 TFSI	103	03/13 →				**FCP4434**	ATE	Disc Diam mm:272,For PR code:1KE
1.4 TFSI	110	05/14 →	**FCP4433**	LUCAS/TRW				
1.4 TFSI	110	05/14 →				**FCP4697**	ATE	Disc Diam mm:310,For PR code:1KY
1.4 TFSI	110	05/14 →				**FCP4434**	ATE	Disc Diam mm:272,For PR code:1KE
1.4 TFSI	90	09/12 →	**FCP4433**	LUCAS/TRW				
1.4 TFSI	90	09/12 →				**FCP4697**	ATE	Disc Diam mm:310,For PR code:1KY
1.4 TFSI	90	09/12 →				**FCP4434**	ATE	Disc Diam mm:272,For PR code:1KE
1.4 TFSI	92	05/14 →	**FCP4433**	LUCAS/TRW				
1.4 TFSI	92	05/14 →				**FCP4697**	ATE	Disc Diam mm:310,For PR code:1KY
1.4 TFSI	92	05/14 →				**FCP4434**	ATE	Disc Diam mm:272,For PR code:1KE
1.4 TFSI e-tron	110	05/14 →	**FCP4433**	LUCAS/TRW				
1.4 TFSI e-tron	110	05/14 →				**FCP4697**	ATE	Disc Diam mm:310,For PR code:1KY
1.4 TFSI e-tron	110	05/14 →				**FCP4434**	ATE	Disc Diam mm:272,For PR code:1KE
1.4 TFSI e-tron	150	05/14 →	**FCP4433**	TRW				
1.4 TFSI e-tron	150	05/14 →				**FCP4434**	ATE	
1.4 TFSI g-tron	81	11/13 →	**FCP4433**	LUCAS/TRW				
1.4 TFSI g-tron	81	11/13 →				**FCP4697**	ATE	Disc Diam mm:310,For PR code:1KY
1.4 TFSI g-tron	81	11/13 →				**FCP4434**	ATE	Disc Diam mm:272,For PR code:1KE
1.6 TDI	77	10/12 →	**FCP4433**	LUCAS/TRW				
1.6 TDI	77	10/12 →				**FCP4697**	ATE	Disc Diam mm:310,For PR code:1KY
1.6 TDI	77	10/12 →				**FCP4434**	ATE	Disc Diam mm:272,For PR code:1KE
1.6 TDI	81	09/13 →	**FCP4433**	LUCAS/TRW				
1.6 TDI	81	09/13 →				**FCP4697**	ATE	Disc Diam mm:310,For PR code:1KY
1.6 TDI	81	09/13 →				**FCP4434**	ATE	Disc Diam mm:272,For PR code:1KE
1.6 TDI	85	02/17 →	**FCP4433**	TRW	Disc Diam mm:288,For PR code:1ZE			
1.6 TDI	85	02/17 →				**FCP4434**	ATE	Disc Diam mm:272,For PR code:1KE
1.6 TDI quattro	81	05/15 →	**FCP4433**	LUCAS/TRW	Pr Number 1ZE			
1.6 TDI quattro	81	05/15 →				**FCP4697**	ATE	For PR code:1KY/1KJ/2ED
1.6 TDI quattro	81	05/15 →				**FCP4434**	ATE	For PR code:1KE
1.8 TFSI	132	09/12 →	**FCP4433**	LUCAS/TRW				
1.8 TFSI	132	09/12 →				**FCP4697**	ATE	Disc Diam mm:310,For PR code:1KY
1.8 TFSI	132	09/12 →				**FCP4434**	ATE	Disc Diam mm:272,For PR code:1KE
1.8 TFSI quattro	132	05/13 →	**FCP4433**	LUCAS/TRW				
1.8 TFSI quattro	132	05/13 →				**FCP4697**	ATE	Disc Diam mm:310,For PR code:1KY
1.8 TFSI quattro	132	05/13 →				**FCP4434**	ATE	Disc Diam mm:272,For PR code:1KE
2.0 TDI	100	05/13 →	**FCP4433**	LUCAS/TRW				
2.0 TDI	100	05/13 →				**FCP4697**	ATE	Disc Diam mm:310,For PR code:1KY

For material availability see page 16-18 / Per la disponibilità materiali vedere a pagina 16-18

FERODO RACING
Updated on November 2020

...AUDI

...A3 Sportback (8VA, 8VF)

	kW				NOTE			NOTE
2.0 TDI	100	05/13 →				FCP4434	ATE	Disc Diam mm:272,For PR code:1KE
2.0 TDI	105	03/13 →	FCP4433	LUCAS/TRW				
2.0 TDI	105	03/13 →				FCP4697	ATE	Disc Diam mm:310,For PR code:1KY
2.0 TDI	105	03/13 →				FCP4434	ATE	Disc Diam mm:272,For PR code:1KE
2.0 TDI	110	09/12 →	FCP4433	LUCAS/TRW				
2.0 TDI	110	09/12 →				FCP4697	ATE	Disc Diam mm:310,For PR code:1KY
2.0 TDI	110	09/12 →				FCP4434	ATE	Disc Diam mm:272,For PR code:1KE
2.0 TDI	135	05/13 →	FCP4433	LUCAS/TRW				
2.0 TDI	135	05/13 →				FCP4697	ATE	Disc Diam mm:310,For PR code:1KY
2.0 TDI	135	05/13 →				FCP4434	ATE	Disc Diam mm:272,For PR code:1KE
2.0 TDI	81	05/13 →	FCP4433	LUCAS/TRW				
2.0 TDI	81	05/13 →				FCP4697	ATE	Disc Diam mm:310,For PR code:1KY
2.0 TDI	81	05/13 →				FCP4434	ATE	Disc Diam mm:272,For PR code:1KE
2.0 TDI quattro	110	11/12 →	FCP4433	LUCAS/TRW				
2.0 TDI quattro	110	02/13 →				FCP4697	ATE	Disc Diam mm:310,For PR code:1KY
2.0 TDI quattro	110	02/13 →				FCP4434	ATE	Disc Diam mm:272,For PR code:1KE
2.0 TDI quattro	135	05/13 →	FCP4433	LUCAS/TRW				
2.0 TDI quattro	135	05/13 →				FCP4697	ATE	Disc Diam mm:310,For PR code:1KY
2.0 TDI quattro	135	05/13 →				FCP4434	ATE	Disc Diam mm:272,For PR code:1KE
2.0 TFSI	140	05/16 →	FCP4433	TRW	Disc Diam mm:288,For PR code:1ZE			
2.0 TFSI	140	05/16 →				FCP4434	ATE	Disc Diam mm:272,For PR code:1KE
2.0 TFSI	162	02/15 →	FCP4433	TRW				
2.0 TFSI	162	02/15 →				FCP4434	ATE	
2.0 TFSI quattro	140	05/16 →	FCP4433	TRW	Disc Diam mm:288,For PR code:1ZE			
2.0 TFSI quattro	140	05/16 →				FCP4434	ATE	Disc Diam mm:272,For PR code:1KE
RS3 quattro	270	03/15 →	FCP1094	ATE	For PR number 1ZF			
RS3 quattro	270	03/15 →	FCP1664	BREMBO	For PR number 1LU,1LH			
RS3 quattro	270	03/15 →				FCP4697	ATE	For PR number 2EE,1KX
RS3 quattro	294	04/17 →	FCP1664	BREMBO	For PR number 1LU,1LH			

A4 (8D2, B5)

1.8 quattro	92	08/97 → 02/99	FCP775	LUCAS/TRW				
1.8 quattro	92	08/97 → 02/99	FCP1289	LUCAS/TRW				
1.8 T	132	12/97 → 11/00	FCP1323	ATE				
1.8 T quattro	110	01/95 → 11/00	FCP1323	ATE				
1.8 T quattro	132	03/99 → 11/00	FCP1323	ATE				
1.9 TDi quattro	81	03/99 → 11/00	FCP1323	ATE				
1.9 Tdi quattro	85	03/00 → 11/00	FCP775	LUCAS/TRW				
1.9 Tdi quattro	85	03/00 → 11/00	FCP1323	ATE				
2.4	120	03/99 → 11/00	FCP1323	ATE				
2.4 quattro	121	03/97 → 02/99	FCP590	ATE				
2.4 quattro	121	03/97 → 02/99				FCP541	LUCAS/TRW	
2.4 quattro	120	03/99 → 11/00	FCP1323	ATE				
2.5 TDI quattro	110	01/97 → 02/99	FCP590	ATE				
2.5 TDI quattro	110	01/97 → 02/99				FCP541	LUCAS/TRW	
2.6 quattro	110	01/95 → 02/99	FCP590	ATE				
2.6 quattro	110	01/95 → 02/99				FCP596	LUCAS/TRW	
2.8 quattro	128	01/95 → 07/97	FCP590	ATE				
2.8 quattro	128	01/95 → 07/97				FCP596	LUCAS/TRW	
2.8 quattro	142	10/96 → 02/99	FCP590	ATE				
2.8 quattro	142	10/96 → 02/99				FCP596	LUCAS/TRW	
S4 quattro	195	09/97 → 09/01	FCP1629	ATE				
S4 quattro	195	09/97 → 09/01				FCP1491	LUCAS/TRW	

A4 (8E2, B6)

1.6	75	11/00 → 12/04	FCP1717	ATE	PR 1LB,1LE(288mm disc)1LT,1LF(312mm disc)			
1.6	75	11/00 → 12/04				FCP1491	LUCAS/TRW	
1.8 T	120	07/02 → 12/04	FCP1717	ATE	PR 1LB,1LE(288mm disc)1LT,1LF(312mm disc)			
1.8 T	120	07/02 → 12/04				FCP1491	LUCAS/TRW	
1.8 T	125	07/01 → 12/04	FCP1717	ATE	PR 1LB,1LE(288mm disc)1LT,1LF(312mm disc)			
1.8 T	125	07/01 → 12/04				FCP1491	LUCAS/TRW	
1.8 T	140	11/02 → 12/04	FCP1717	ATE	PR 1LB,1LE(288mm disc)1LT,1LF(312mm disc)			
1.8 T	140	11/02 → 12/04				FCP1491	LUCAS/TRW	
1.8 T quattro	110	11/00 → 07/02	FCP1717	ATE	PR 1LB,1LE(288mm disc)1LT,1LF(312mm disc)			
1.8 T quattro	110	11/00 → 07/02				FCP1491	LUCAS/TRW	
1.8 T quattro	120	07/02 → 12/04	FCP1717	ATE	PR 1LB,1LE(288mm disc)1LT,1LF(312mm disc)			
1.8 T quattro	120	07/02 → 12/04				FCP1491	LUCAS/TRW	
1.8 T quattro	125	07/01 → 12/04	FCP1717	ATE	PR 1LB,1LE(288mm disc)1LT,1LF(312mm disc)			
1.8 T quattro	125	07/01 → 12/04				FCP1491	LUCAS/TRW	
1.8 T quattro	140	11/02 → 12/04	FCP1717	ATE	PR 1LB,1LE(288mm disc)1LT,1LF(312mm disc)			
1.8 T quattro	140	11/02 → 12/04				FCP1491	LUCAS/TRW	
1.9 TDI	74	05/01 → 12/04	FCP1717	ATE	PR 1LB,1LE(288mm disc)1LT,1LF(312mm disc)			
1.9 TDI	74	05/01 → 12/04				FCP1491	LUCAS/TRW	
1.9 TDI quattro	96	11/01 → 12/04	FCP1717	ATE	PR 1LB,1LE(288mm disc)1LT,1LF(312mm disc)			
1.9 TDI quattro	96	11/01 → 12/04				FCP1491	LUCAS/TRW	
2.0 i	96	11/00 → 10/04	FCP1323	ATE				
2.0 i	96	11/00 → 12/04	FCP1717	ATE	PR 1LB,1LE(288mm disc)1LT,1LF(312mm disc)			

For material availability see page 16-18 / Per la disponibilità materiali vedere a pagina 16-18

...AUDI	kW				NOTE			NOTE
...A4 (8E2, B6)								
2.0 i	96	11/00 → 12/04				FCP1491	LUCAS/TRW	
2.4	120	09/01 → 12/04	FCP1717	ATE	PR 1LB,1LE(288mm disc)1LT,1LF(312mm disc)			
2.4	120	09/01 → 12/04				FCP1491	LUCAS/TRW	
2.4	125	09/01 → 12/04	FCP1717	ATE	PR 1LB,1LE(288mm disc)1LT,1LF(312mm disc)			
2.4	125	09/01 → 12/04				FCP1491	LUCAS/TRW	
2.5 TDI	114	08/01 → 07/02	FCP1717	ATE	PR 1LB,1LE(288mm disc)1LT,1LF(312mm disc)			
2.5 TDI	114	08/01 → 07/02				FCP1491	LUCAS/TRW	
2.5 TDI	120	07/02 → 12/04	FCP1717	ATE	PR 1LB,1LE(288mm disc)1LT,1LF(312mm disc)			
2.5 TDI	120	07/02 → 12/04				FCP1491	LUCAS/TRW	
2.5 TDI quattro	132	11/00 → 12/04	FCP1717	ATE	PR 1LB,1LE(288mm disc)1LT,1LF(312mm disc)			
2.5 TDI quattro	132	11/00 → 12/04				FCP1491	LUCAS/TRW	
3.0	160	04/01 → 12/04	FCP1717	ATE	PR 1LB,1LE(288mm disc)1LT,1LF(312mm disc)			
3.0	160	04/01 → 12/04				FCP1491	LUCAS/TRW	
3.0 i V6	162	11/00 → 10/04	FCP1323	ATE				
3.0 i V6	162	11/00 → 12/04	FCP1717	ATE	PR 1LB,1LE(288mm disc)1LT,1LF(312mm disc)			
3.0 i V6	162	11/00 → 12/04				FCP1491	LUCAS/TRW	
3.0 quattro	160	04/01 → 12/04	FCP1717	ATE	PR 1LB,1LE(288mm disc)1LT,1LF(312mm disc)			
3.0 quattro	160	04/01 → 12/04				FCP1491	LUCAS/TRW	
3.0 quattro	162	11/00 → 12/04	FCP1323	ATE				
3.0 quattro	162	11/00 → 12/04	FCP1717	ATE	PR 1LB,1LE(288mm disc)1LT,1LF(312mm disc)			
3.0 quattro	162	11/00 → 12/04				FCP1491	LUCAS/TRW	
A4 (8E2, B6) Cabriolet								
1.9 TDi	96	11/00 →	FCP1323	ATE				
1.9 TDi	96	11/00 → 10/04	FCP1323	ATE				
1.9 TDi	96	11/00 → 12/04	FCP1717	ATE	PR 1LB,1LE(288mm disc)1LT,1LF(312mm disc)			
1.9 TDi	96	11/00 → 12/04				FCP1491	LUCAS/TRW	
2.0 FSi	110	07/02 →	FCP1323	ATE				
2.0 FSi	110	07/02 → 10/04	FCP1323	ATE				
2.0 FSi	110	07/02 → 12/04	FCP1717	ATE	PR 1LB,1LE(288mm disc)1LT,1LF(312mm disc)			
2.0 FSi	110	07/02 → 12/04				FCP1491	LUCAS/TRW	
2.0 i	96	11/00 →	FCP1323	ATE				
2.0 i	96	09/04 → 12/05	FCP1717	ATE	PR1LB,1LE(288mm disc)1LT,1LF(312mm disc)			
2.0 i	96	09/04 → 12/05				FCP1491	LUCAS/TRW	
2.4 i	125	09/01 →	FCP1323	ATE				
2.4 i	125	04/02 → 12/05	FCP1717	ATE	PR1LB,1LE(288mm disc)1LT,1LF(312mm disc)			
2.4 i	125	04/02 → 12/05				FCP1491	LUCAS/TRW	
3.0 i V6	162	11/00 →	FCP1323	ATE				
3.0 i V6	162	04/02 → 12/05	FCP1717	ATE	PR1LB,1LE(288mm disc)1LT,1LF(312mm disc)			
3.0 i V6	162	04/02 → 12/05				FCP1491	LUCAS/TRW	
3.0 i V6	162	04/02 → 12/05				FCP1655	LUCAS/TRW	
A4 (8EC, B7)								
1.6	75	11/04 → 06/08	FCP1629	ATE	PR 1LA, 1LC			
1.6	75	11/04 → 06/08	FCP1717	ATE	PR1LB,1LE(288mm disc)1LT,1LF(312mm disc)			
1.6	75	11/04 → 06/08				FCP1491	LUCAS/TRW	
1.6	75	11/04 → 06/08				FCP1636	LUCAS/TRW	
1.8 T	120	11/04 → 06/08	FCP1629	ATE	PR 1LA, 1LC			
1.8 T	120	11/04 → 06/08	FCP1717	ATE	PR1LB,1LE(288mm disc)1LT,1LF(312mm disc)			
1.8 T	120	11/04 → 06/08				FCP1491	LUCAS/TRW	
1.8 T	120	11/04 → 06/08				FCP1636	LUCAS/TRW	
1.8 T quattro	120	11/04 → 06/08	FCP1629	ATE	PR 1LA, 1LC			
1.8 T quattro	120	11/04 → 06/08	FCP1717	ATE	PR1LB,1LE(288mm disc)1LT,1LF(312mm disc)			
1.8 T quattro	120	11/04 → 06/08				FCP1491	LUCAS/TRW	
1.8 T quattro	120	11/04 → 06/08				FCP1636	LUCAS/TRW	
1.9 TDI	85	11/04 → 06/08	FCP1629	ATE	PR 1LA, 1LC			
1.9 TDI	85	11/04 → 06/08	FCP1717	ATE	PR1LB,1LE(288mm disc)1LT,1LF(312mm disc)			
1.9 TDI	85	11/04 → 06/08				FCP1491	LUCAS/TRW	
1.9 TDI	85	11/04 → 06/08				FCP1636	LUCAS/TRW	
2.0	96	11/04 → 06/08	FCP1629	ATE	PR 1LA, 1LC			
2.0	96	11/04 → 06/08	FCP1717	ATE	PR1LB,1LE(288mm disc)1LT,1LF(312mm disc)			
2.0	96	11/04 → 06/08				FCP1491	LUCAS/TRW	
2.0	96	11/04 → 06/08				FCP1636	LUCAS/TRW	
2.0 FSi	110	01/05 → 07/05	FCP1717	ATE	PR1LB,1LE(288mm disc)1LT,1LF(312mm disc)			
2.0 FSi	110	01/05 → 07/05				FCP1491	LUCAS/TRW	
2.0 FSi	110	01/05 → 07/05				FCP1636	LUCAS/TRW	
2.0 TDI	100	11/04 → 06/08	FCP1629	ATE	PR 1LA, 1LC			
2.0 TDI	100	11/04 → 06/08	FCP1717	ATE	PR1LB,1LE(288mm disc)1LT,1LF(312mm disc)			
2.0 TDI	100	11/04 → 06/08				FCP1491	LUCAS/TRW	
2.0 TDI	100	11/04 → 06/08				FCP1636	LUCAS/TRW	
2.0 TDI	103	11/04 → 06/08	FCP1629	ATE	PR 1LA, 1LC			
2.0 TDI	103	11/04 → 06/08	FCP1717	ATE	PR1LB,1LE(288mm disc)1LT,1LF(312mm disc)			
2.0 TDI	103	11/04 → 06/08				FCP1491	LUCAS/TRW	
2.0 TDI	103	11/04 → 06/08				FCP1636	LUCAS/TRW	
2.0 TDI	120	06/06 → 06/08	FCP1717	ATE	PR1LB,1LE(288mm disc)1LT,1LF(312mm disc)			
2.0 TDI	120	06/06 → 06/08				FCP1491	LUCAS/TRW	
2.0 TDI	120	06/06 → 06/08				FCP1636	LUCAS/TRW	

For material availability see page 16-18 / Per la disponibilità materiali vedere a pagina 16-18



kW

...AUDI

...A4 (8EC, B7)

2.0 TDI	125	06/06 → 06/08	**FCP1717**	ATE	PR1LB,1LE(288mm disc)1LT,1LF(312mm disc)			
2.0 TDI	125	06/06 → 06/08				**FCP1491**	LUCAS/TRW	
2.0 TDI	125	06/06 → 06/08				**FCP1636**	LUCAS/TRW	
2.0 TDI	89	09/05 → 09/06	**FCP1717**	ATE	PR1LB,1LE(288mm disc)1LT,1LF(312mm disc)			
2.0 TDI	89	09/05 → 09/06				**FCP1491**	LUCAS/TRW	
2.0 TDI	89	09/05 → 09/06				**FCP1636**	LUCAS/TRW	
2.0 TDI 16V	103	11/04 → 06/08	**FCP1717**	ATE	PR1LB,1LE(288mm disc)1LT,1LF(312mm disc)			
2.0 TDI 16V	103	11/04 → 06/08				**FCP1491**	LUCAS/TRW	
2.0 TDI 16V	103	11/04 → 06/08				**FCP1636**	LUCAS/TRW	
2.0 TDI quattro	103	01/06 → 06/08	**FCP1717**	ATE	PR1LB,1LE(288mm disc)1LT,1LF(312mm disc)			
2.0 TDI quattro	103	01/06 → 06/08				**FCP1491**	LUCAS/TRW	
2.0 TDI quattro	103	01/06 → 06/08				**FCP1636**	LUCAS/TRW	
2.0 TDI quattro	120	06/06 → 06/08	**FCP1717**	ATE	PR1LB,1LE(288mm disc)1LT,1LF(312mm disc)			
2.0 TDI quattro	120	06/06 → 06/08				**FCP1491**	LUCAS/TRW	
2.0 TDI quattro	125	06/06 → 06/08	**FCP1717**	ATE	PR1LB,1LE(288mm disc)1LT,1LF(312mm disc)			
2.0 TDI quattro	125	06/06 → 06/08				**FCP1491**	LUCAS/TRW	
2.0 TDI quattro	125	06/06 → 06/08				**FCP1636**	LUCAS/TRW	
2.0 TFSI	125	10/06 → 06/08	**FCP1717**	ATE	PR1LB,1LE(288mm disc)1LT,1LF(312mm disc)			
2.0 TFSI	125	10/06 → 06/08				**FCP1491**	LUCAS/TRW	
2.0 TFSI	125	10/06 → 06/08				**FCP1636**	LUCAS/TRW	
2.0 TFSI	147	11/04 → 06/08	**FCP1629**	ATE	PR 1LA, 1LC			
2.0 TFSI	147	11/04 → 06/08	**FCP1717**	ATE	PR1LB,1LE(288mm disc)1LT,1LF(312mm disc)			
2.0 TFSI	147	11/04 → 06/08				**FCP1491**	LUCAS/TRW	
2.0 TFSI	147	11/04 → 06/08				**FCP1636**	LUCAS/TRW	
2.0 TFSI	162	06/05 → 06/08	**FCP1629**	ATE	PR 1LJ/ 1LA/1LC			
2.0 TFSI	162	06/05 → 06/08	**FCP1717**	ATE	PR1LB,1LE(288mm disc)1LT,1LF(312mm disc)			
2.0 TFSI	162	06/05 → 06/08				**FCP1491**	LUCAS/TRW	
2.0 TFSI	162	06/05 → 06/08				**FCP1636**	LUCAS/TRW	
2.0 TFSI	162	06/05 → 06/08				**FCP1655**	LUCAS/TRW	PR 1KE
2.0 TFSI quattro	147	11/04 → 06/08	**FCP1717**	ATE	PR1LB,1LE(288mm disc)1LT,1LF(312mm disc)			
2.0 TFSI quattro	147	11/04 → 06/08				**FCP1491**	LUCAS/TRW	
2.0 TFSI quattro	147	11/04 → 06/08				**FCP1636**	LUCAS/TRW	
2.0 TFSI quattro	162	06/05 → 06/08	**FCP1629**	ATE	PR 1LA, 1LC			
2.0 TFSI quattro	162	06/05 → 06/08	**FCP1717**	ATE	PR1LB,1LE(288mm disc)1LT,1LF(312mm disc)			
2.0 TFSI quattro	162	06/05 → 06/08				**FCP1491**	LUCAS/TRW	
2.0 TFSI quattro	162	06/05 → 06/08				**FCP1636**	LUCAS/TRW	
2.0 TFSI quattro	162	06/05 → 06/08				**FCP1655**	LUCAS/TRW	
2.5 TDI	120	11/04 → 05/06	**FCP1629**	ATE	PR 1LA, 1LC			
2.5 TDI	120	11/04 → 05/06	**FCP1717**	ATE	PR1LB,1LE(288mm disc)1LT,1LF(312mm disc)			
2.5 TDI	120	11/04 → 05/06				**FCP1491**	LUCAS/TRW	
2.5 TDI	120	11/04 → 05/06				**FCP1636**	LUCAS/TRW	
2.7 TDI	120	11/05 → 06/08	**FCP1717**	ATE	PR1LB,1LE(288mm disc)1LT,1LF(312mm disc)			
2.7 TDI	120	11/05 → 06/08				**FCP1491**	LUCAS/TRW	
2.7 TDI	120	11/05 → 06/08				**FCP1636**	LUCAS/TRW	
2.7 TDI	132	01/06 → 06/08	**FCP1717**	ATE	PR1LB,1LE(288mm disc)1LT,1LF(312mm disc)			
2.7 TDI	132	01/06 → 06/08				**FCP1491**	LUCAS/TRW	
2.7 TDI	132	01/06 → 06/08				**FCP1636**	LUCAS/TRW	
3.0	160	11/04 → 05/06	**FCP1717**	ATE	PR1LB,1LE(288mm disc)1LT,1LF(312mm disc)			
3.0	160	11/04 → 05/06				**FCP1491**	LUCAS/TRW	
3.0	160	11/04 → 05/06				**FCP1636**	LUCAS/TRW	
3.0 quattro	160	11/04 → 07/06	**FCP1717**	ATE	PR1LB,1LE(288mm disc)1LT,1LF(312mm disc)			
3.0 quattro	160	11/04 → 07/06				**FCP1491**	LUCAS/TRW	
3.0 quattro	160	11/04 → 07/06				**FCP1636**	LUCAS/TRW	
3.0 TDI quattro	150	11/04 → 06/08	**FCP1629**	ATE	PR 1LA, 1LC			
3.0 TDI quattro	150	11/04 → 06/08	**FCP1717**	ATE	PR1LB,1LE(288mm disc)1LT,1LF(312mm disc)			
3.0 TDI quattro	150	11/04 → 06/08				**FCP1491**	LUCAS/TRW	
3.0 TDI quattro	150	11/04 → 06/08				**FCP1636**	LUCAS/TRW	
3.0 TDI quattro	171	01/06 → 06/08	**FCP1717**	ATE	PR1LB,1LE(288mm disc)1LT,1LF(312mm disc)			
3.0 TDI quattro	171	01/06 → 06/08				**FCP1491**	LUCAS/TRW	
3.0 TDI quattro	171	01/06 → 06/08				**FCP1636**	LUCAS/TRW	
3.2 FSI	188	01/05 → 06/08	**FCP1629**	ATE	PR 1LA, 1LC			
3.2 FSI	188	01/05 → 06/08	**FCP1717**	ATE	PR1LB,1LE(288mm disc)1LT,1LF(312mm disc)			
3.2 FSI	188	01/05 → 06/08				**FCP1491**	LUCAS/TRW	
3.2 FSI	188	01/05 → 06/08				**FCP1636**	LUCAS/TRW	
3.2 FSI quattro	188	01/05 → 06/08	**FCP1629**	ATE	PR 1LA, 1LC			
3.2 FSI quattro	188	01/05 → 06/08	**FCP1717**	ATE	PR1LB,1LE(288mm disc)1LT,1LF(312mm disc)			
3.2 FSI quattro	188	01/05 → 06/08				**FCP1491**	LUCAS/TRW	
3.2 FSI quattro	188	01/05 → 06/08				**FCP1636**	LUCAS/TRW	
RS4 quattro	309	09/05 → 06/08	**FCP1664**	BREMBO	PR 1LP			
RS4 quattro	309	09/05 → 06/08	**FCP4467**	BREMBO	NOT FOR CERAMIC DISCS			
RS4 quattro	309	09/05 → 06/08				**FCP1655**	LUCAS/TRW	
S4 quattro	253	03/03 → 06/08	**FCP1629**	ATE	PR 1LJ			
S4 quattro	253	03/03 → 06/08				**FCP1655**	LUCAS/TRW	

For material availability see page 16-18 / Per la disponibilità materiali vedere a pagina 16-18

...AUDI

			kW				NOTE			NOTE
A4 (8K2, B8)										
1.8 TFSI	118	11/07 →		**FCP4045**	ATE					
1.8 TFSI	118	11/07 →						**FCP4050**	LUCAS/TRW	
1.8 TFSI	88	01/08 →		**FCP4045**	ATE					
1.8 TFSI	88	01/08 →						**FCP4050**	LUCAS/TRW	
2.0 TDi	100	11/07 →		**FCP4045**	ATE					
2.0 TDi	100	11/07 →						**FCP4050**	LUCAS/TRW	
2.0 TDi	105	11/07 →		**FCP4045**	ATE					
2.0 TDi	105	11/07 →						**FCP4050**	LUCAS/TRW	
2.0 TDi	88	06/08 →		**FCP4045**	ATE					
2.0 TDi	88	06/08 →						**FCP4050**	LUCAS/TRW	
2.0 Tdi Quattro	125	01/08 →		**FCP4044**	LUCAS/TRW					
2.0 Tdi Quattro	125	01/08 →						**FCP4050**	LUCAS/TRW	
2.0 TFSI	132	06/08 →		**FCP4044**	LUCAS/TRW					
2.0 TFSI	132	06/08 →						**FCP4050**	LUCAS/TRW	
2.0 TFSI	155	06/08 →		**FCP4044**	LUCAS/TRW					
2.0 TFSI	155	06/08 →						**FCP4050**	LUCAS/TRW	
2.0 TFSI Quattro	155	06/08 →		**FCP4044**	LUCAS/TRW					
2.0 TFSI Quattro	155	06/08 →						**FCP4050**	LUCAS/TRW	
2.7 TDi	140	11/07 →		**FCP4044**	LUCAS/TRW					
2.7 TDi	140	11/07 →						**FCP4050**	LUCAS/TRW	
3.0 TDi Quattro	176	11/07 →		**FCP4044**	LUCAS/TRW					
3.0 TDi Quattro	176	11/07 →						**FCP4050**	LUCAS/TRW	
3.2 FSI Quattro	195	11/07 →		**FCP4044**	LUCAS/TRW					
3.2 FSI Quattro	195	11/07 →						**FCP4050**	LUCAS/TRW	
S4 Quattro	245	11/08 →		**FCP4044**	LUCAS/TRW					
S4 Quattro	245	11/08 →						**FCP4050**	LUCAS/TRW	
A4 Allroad (8KH)										
2.0 TDI Quattro	125	04/09 →		**FCP4044**	LUCAS/TRW					
2.0 TDI Quattro	125	04/09 →						**FCP4050**	LUCAS/TRW	
2.0 TFSI Quattro	155	04/09 →		**FCP4044**	LUCAS/TRW					
2.0 TFSI Quattro	155	04/09 →						**FCP4050**	LUCAS/TRW	
3.0 TDI Quattro	176	04/09 →		**FCP4044**	LUCAS/TRW					
3.0 TDI Quattro	176	04/09 →						**FCP4050**	LUCAS/TRW	
3.0 TDI Quattro	180	01/12 →		**FCP4044**	LUCAS/TRW					
3.0 TDI Quattro	180	01/12 →						**FCP4050**	LUCAS/TRW	
A4 Avant (8D5, B5)										
1.6	74	11/94 → 09/97		**FCP590**	ATE					
1.6	74	11/94 → 09/97		**FCP775**	LUCAS/TRW					
1.6	74	11/94 → 09/97						**FCP596**	LUCAS/TRW	
1.6	74	10/97 →		**FCP590**	ATE					
1.6	74	10/97 →		**FCP1289**	LUCAS/TRW					
1.6	74	10/97 → 11/00		**FCP1289**	LUCAS/TRW					
1.6	74	10/97 → 11/00						**FCP541**	LUCAS/TRW	
1.6 i	75	11/00 →		**FCP1289**	LUCAS/TRW					
1.6 i	75	11/00 →						**FCP541**	LUCAS/TRW	
1.8 20V	110	11/94 → 09/97		**FCP590**	ATE					
1.8 20V	110	11/94 → 09/97		**FCP775**	LUCAS/TRW					
1.8 20V	110	11/94 → 09/97						**FCP596**	LUCAS/TRW	
1.8 20V	85, 132	10/97 →		**FCP590**	ATE					
1.8 20V	85, 132	10/97 →		**FCP1289**	LUCAS/TRW					
1.8 20V	85, 132	10/97 →						**FCP541**	LUCAS/TRW	
1.8 i Turbo 20V	110	11/00 → 07/02		**FCP1717**	ATE	PR 1LB,1LE(288mm disc)1LT,1LF(312mm disc)				
1.8 i Turbo 20V	110	11/00 → 10/04		**FCP1323**	ATE					
1.8 i Turbo 20V	110	11/00 → 07/02						**FCP1491**	LUCAS/TRW	
1.8 i Turbo 20V	110	11/00 → 10/04						**FCP541**	LUCAS/TRW	
1.8 i Turbo Â 20V	110, 132	11/94 → 07/97		**FCP1323**	ATE					
1.8 quattro	92	01/96 → 02/99		**FCP775**	LUCAS/TRW					
1.8 quattro	92	01/96 → 02/99		**FCP1289**	LUCAS/TRW					
1.8 T	132	12/97 → 09/01		**FCP1323**	ATE					
1.8 T quattro	110	01/96 → 09/01		**FCP1323**	ATE					
1.8 T quattro	132	03/99 → 09/01		**FCP1323**	ATE					
1.8 Turbo 20V	110, 132	11/94 → 07/97		**FCP590**	ATE					
1.8 Turbo 20V	110, 132	11/94 → 07/97						**FCP596**	LUCAS/TRW	
1.9 TDi	66, 81	11/94 → 09/97		**FCP590**	ATE					
1.9 TDi	66, 81	11/94 → 09/97		**FCP775**	LUCAS/TRW					
1.9 TDi	66, 81	11/94 → 09/97						**FCP596**	LUCAS/TRW	
1.9 TDi	66, 81	10/97 → 11/00		**FCP1289**	LUCAS/TRW					
1.9 TDi	66, 81	10/97 → 11/00		**FCP1323**	ATE					
1.9 TDi	66, 81	10/97 → 11/00						**FCP541**	LUCAS/TRW	
1.9 Tdi quattro	85	03/00 → 09/01		**FCP775**	LUCAS/TRW					
1.9 TDi quattro	96	03/99 → 09/01		**FCP1323**	ATE					
2.4	120	03/99 → 09/01		**FCP1323**	ATE					
2.4 30V	121	01/97 → 11/00		**FCP590**	ATE					
2.4 30V	121	01/97 → 11/00						**FCP541**	LUCAS/TRW	
2.4 quattro	121	03/97 → 02/99		**FCP590**	ATE					

For material availability see page 16-18 / Per la disponibilità materiali vedere a pagina 16-18

...AUDI										
		kW				NOTE				NOTE
...A4 Avant (8D5, B5)										
2.4 quattro	121	03/97 → 02/99					FCP541	LUCAS/TRW	
2.4 quattro	120	08/97 → 09/01	FCP1323	ATE					
2.5 TDi 24V	110	01/97 → 11/00	FCP590	ATE					
2.5 TDi 24V	110	01/97 → 11/00					FCP541	LUCAS/TRW	
2.5 TDI quattro	110	01/97 → 02/99	FCP590	ATE					
2.5 TDI quattro	110	01/97 → 02/99					FCP541	LUCAS/TRW	
2.6	110	11/94 → 11/00	FCP590	ATE					
2.6	110	11/94 → 11/00					FCP596	LUCAS/TRW	
2.6 quattro	110	01/96 → 09/01	FCP590	ATE					
2.6 quattro	110	01/96 → 09/01					FCP596	LUCAS/TRW	
2.8	140	03/99 → 09/00	FCP1323	ATE					
2.8 30V	142	11/94 → 11/00	FCP590	ATE					
2.8 30V	142	11/94 → 11/00					FCP596	LUCAS/TRW	
2.8 quattro	140	03/99 → 09/00	FCP1323	ATE					
2.8 quattro	128	01/96 → 09/96	FCP590	ATE					
2.8 quattro	128	01/96 → 09/96					FCP596	LUCAS/TRW	
2.8 quattro	142	10/96 → 02/99	FCP590	ATE					
2.8 quattro	142	10/96 → 02/99					FCP596	LUCAS/TRW	
RS4 quattro	280	05/00 → 09/01	FCP1001	ATE					
RS4 quattro	280	05/00 → 09/01					FCP1491	LUCAS/TRW	
S4 quattro	195	09/97 → 09/01	FCP1629	ATE					
S4 quattro	195	09/97 → 09/01					FCP1491	LUCAS/TRW	
A4 Avant (8E5, B6)										
1.6	75	09/01 → 12/04	FCP1717	ATE	PR 1LB,1LE(288mm disc)1LT,1LF(312mm disc)				
1.6	75	09/01 → 12/04					FCP1491	LUCAS/TRW	
1.8 T	110	09/01 → 07/02	FCP1717	ATE	PR 1LB,1LE(288mm disc)1LT,1LF(312mm disc)				
1.8 T	110	09/01 → 07/02					FCP1491	LUCAS/TRW	
1.8 T	120	07/02 → 12/04	FCP1717	ATE	PR 1LB,1LE(288mm disc)1LT,1LF(312mm disc)				
1.8 T	120	07/02 → 12/04					FCP1491	LUCAS/TRW	
1.8 T	140	11/02 → 12/04	FCP1717	ATE	PR 1LB,1LE(288mm disc)1LT,1LF(312mm disc)				
1.8 T	140	11/02 → 12/04					FCP1491	LUCAS/TRW	
1.8 T quattro	110	09/01 → 07/02	FCP1717	ATE	PR 1LB,1LE(288mm disc)1LT,1LF(312mm disc)				
1.8 T quattro	110	09/01 → 07/02					FCP1491	LUCAS/TRW	
1.8 T quattro	120	07/02 → 12/04	FCP1717	ATE	PR 1LB,1LE(288mm disc)1LT,1LF(312mm disc)				
1.8 T quattro	120	07/02 → 12/04					FCP1491	LUCAS/TRW	
1.8 T quattro	125	09/01 → 12/04	FCP1717	ATE	PR 1LB,1LE(288mm disc)1LT,1LF(312mm disc)				
1.8 T quattro	125	09/01 → 12/04					FCP1491	LUCAS/TRW	
1.8 T quattro	140	11/02 → 12/04	FCP1717	ATE	PR 1LB,1LE(288mm disc)1LT,1LF(312mm disc)				
1.8 T quattro	140	11/02 → 12/04					FCP1491	LUCAS/TRW	
1.9 TDI	74	11/01 → 12/04	FCP1717	ATE	PR 1LB,1LE(288mm disc)1LT,1LF(312mm disc)				
1.9 TDI	74	11/01 → 12/04					FCP1491	LUCAS/TRW	
1.9 TDI	96	11/00 → 10/04	FCP1323	ATE					
1.9 TDI	96	09/01 → 12/04	FCP1717	ATE	PR 1LB,1LE(288mm disc)1LT,1LF(312mm disc)				
1.9 TDI	96	09/01 → 12/04					FCP1491	LUCAS/TRW	
1.9 TDI quattro	96	11/01 → 12/04	FCP1717	ATE	PR 1LB,1LE(288mm disc)1LT,1LF(312mm disc)				
1.9 TDI quattro	96	11/01 → 12/04					FCP1491	LUCAS/TRW	
2.0	96	11/00 → 10/04	FCP1323	ATE					
2.0	96	09/01 → 12/04	FCP1717	ATE	PR 1LB,1LE(288mm disc)1LT,1LF(312mm disc)				
2.0	96	09/01 → 12/04					FCP1491	LUCAS/TRW	
2.0 FSI	110	07/02 → 12/04	FCP1717	ATE	PR 1LB,1LE(288mm disc)1LT,1LF(312mm disc)				
2.0 FSI	110	07/02 → 12/04					FCP1491	LUCAS/TRW	
2.4	120	09/01 → 12/04	FCP1717	ATE	PR 1LB,1LE(288mm disc)1LT,1LF(312mm disc)				
2.4	120	09/01 → 12/04					FCP1491	LUCAS/TRW	
2.4	125	09/01 → 12/04	FCP1717	ATE	PR 1LB,1LE(288mm disc)1LT,1LF(312mm disc)				
2.4	125	09/01 → 12/04					FCP1491	LUCAS/TRW	
2.5 TDI	114	09/01 → 07/02	FCP1717	ATE	PR 1LB,1LE(288mm disc)1LT,1LF(312mm disc)				
2.5 TDI	114	09/01 → 07/02					FCP1491	LUCAS/TRW	
2.5 TDI	120	07/02 → 12/04	FCP1717	ATE	PR 1LB,1LE(288mm disc)1LT,1LF(312mm disc)				
2.5 TDI	120	07/02 → 12/04					FCP1491	LUCAS/TRW	
2.5 TDI quattro	132	09/01 → 12/04	FCP1717	ATE	PR 1LB,1LE(288mm disc)1LT,1LF(312mm disc)				
2.5 TDI quattro	132	09/01 → 12/04					FCP1491	LUCAS/TRW	
3.0	160	04/01 → 12/04	FCP1717	ATE	PR 1LB,1LE(288mm disc)1LT,1LF(312mm disc)				
3.0	160	04/01 → 12/04					FCP1491	LUCAS/TRW	
3.0	162	11/00 → 10/04	FCP1323	ATE					
3.0	162	09/01 → 12/04	FCP1717	ATE	PR 1LB,1LE(288mm disc)1LT,1LF(312mm disc)				
3.0	162	09/01 → 12/04					FCP1491	LUCAS/TRW	
3.0 quattro	160	04/01 → 12/04	FCP1717	ATE	PR 1LB,1LE(288mm disc)1LT,1LF(312mm disc)				
3.0 quattro	160	04/01 → 12/04					FCP1491	LUCAS/TRW	
3.0 quattro	162	09/01 → 12/04	FCP1717	ATE	PR 1LB,1LE(288mm disc)1LT,1LF(312mm disc)				
3.0 quattro	162	09/01 → 12/04					FCP1491	LUCAS/TRW	
S4 quattro	253	03/03 → 06/08	FCP1629	ATE	PR 1LJ				
S4 quattro	253	03/03 → 06/08					FCP1655	LUCAS/TRW	

For material availability see page 16-18 / Per la disponibilità materiali vedere a pagina 16-18

...AUDI

A4 Avant (8ED, B7)

	kW				NOTE			NOTE
1.6	75	11/04 → 06/08	FCP1629	ATE	PR 1LA, 1LC			
1.6	75	11/04 → 06/08	FCP1717	ATE	PR1LB,1LE(288mm disc)1LT,1LF(312mm disc)			
1.6	75	11/04 → 06/08				FCP1491	LUCAS/TRW	
1.6	75	11/04 → 06/08				FCP1636	LUCAS/TRW	
1.8 T	120	11/04 → 06/08	FCP1629	ATE	PR 1LA, 1LC			
1.8 T	120	11/04 → 06/08	FCP1717	ATE	PR1LB,1LE(288mm disc)1LT,1LF(312mm disc)			
1.8 T	120	11/04 → 06/08				FCP1491	LUCAS/TRW	
1.8 T	120	11/04 → 06/08				FCP1636	LUCAS/TRW	
1.8 T quattro	120	11/04 → 06/08	FCP1629	ATE	PR 1LA, 1LC			
1.8 T quattro	120	11/04 → 06/08	FCP1717	ATE	PR1LB,1LE(288mm disc)1LT,1LF(312mm disc)			
1.8 T quattro	120	11/04 → 06/08				FCP1491	LUCAS/TRW	
1.8 T quattro	120	11/04 → 06/08				FCP1636	LUCAS/TRW	
1.9 TDI	85	11/04 → 06/08	FCP1629	ATE	PR 1LA, 1LC			
1.9 TDI	85	11/04 → 06/08	FCP1717	ATE	PR1LB,1LE(288mm disc)1LT,1LF(312mm disc)			
1.9 TDI	85	11/04 → 06/08				FCP1491	LUCAS/TRW	
1.9 TDI	85	11/04 → 06/08				FCP1636	LUCAS/TRW	
2.0	96	11/04 → 06/08	FCP1717	ATE	PR1LB,1LE(288mm disc)1LT,1LF(312mm disc)			
2.0	96	11/04 → 06/08				FCP1491	LUCAS/TRW	
2.0	96	11/04 → 06/08				FCP1636	LUCAS/TRW	
2.0 TDI	100	11/04 → 06/08	FCP1717	ATE	PR1LB,1LE(288mm disc)1LT,1LF(312mm disc)			
2.0 TDI	100	11/04 → 06/08				FCP1491	LUCAS/TRW	
2.0 TDI	100	11/04 → 06/08				FCP1636	LUCAS/TRW	
2.0 TDI	103	11/04 → 06/08	FCP1629	ATE	PR 1LA, 1LC			
2.0 TDI	103	11/04 → 06/08	FCP1717	ATE	PR1LB,1LE(288mm disc)1LT,1LF(312mm disc)			
2.0 TDI	103	11/04 → 06/08				FCP1491	LUCAS/TRW	
2.0 TDI	103	11/04 → 06/08				FCP1636	LUCAS/TRW	
2.0 TDI	120	06/06 → 06/08	FCP1717	ATE	PR1LB,1LE(288mm disc)1LT,1LF(312mm disc)			
2.0 TDI	120	06/06 → 06/08				FCP1491	LUCAS/TRW	
2.0 TDI	120	06/06 → 06/08				FCP1636	LUCAS/TRW	
2.0 TDI	125	06/06 → 06/08	FCP1717	ATE	PR1LB,1LE(288mm disc)1LT,1LF(312mm disc)			
2.0 TDI	125	06/06 → 06/08				FCP1491	LUCAS/TRW	
2.0 TDI	125	06/06 → 06/08				FCP1636	LUCAS/TRW	
2.0 TDI	89	09/05 → 09/06	FCP1717	ATE	PR1LB,1LE(288mm disc)1LT,1LF(312mm disc)			
2.0 TDI	89	09/05 → 09/06				FCP1491	LUCAS/TRW	
2.0 TDI	89	09/05 → 09/06				FCP1636	LUCAS/TRW	
2.0 TDI 16V	103	11/04 → 06/08	FCP1717	ATE	PR1LB,1LE(288mm disc)1LT,1LF(312mm disc)			
2.0 TDI 16V	103	11/04 → 06/08				FCP1491	LUCAS/TRW	
2.0 TDI 16V	103	11/04 → 06/08				FCP1636	LUCAS/TRW	
2.0 TDI quattro	103	01/06 → 06/08	FCP1717	ATE	PR1LB,1LE(288mm disc)1LT,1LF(312mm disc)			
2.0 TDI quattro	103	01/06 → 06/08				FCP1491	LUCAS/TRW	
2.0 TDI quattro	103	01/06 → 06/08				FCP1636	LUCAS/TRW	
2.0 TDI quattro	120	06/06 → 06/08	FCP1717	ATE	PR1LB,1LE(288mm disc)1LT,1LF(312mm disc)			
2.0 TDI quattro	120	06/06 → 06/08				FCP1491	LUCAS/TRW	
2.0 TDI quattro	120	06/06 → 06/08				FCP1636	LUCAS/TRW	
2.0 TDI quattro	125	06/06 → 06/08	FCP1717	ATE	PR1LB,1LE(288mm disc)1LT,1LF(312mm disc)			
2.0 TDI quattro	125	06/06 → 06/08				FCP1491	LUCAS/TRW	
2.0 TDI quattro	125	06/06 → 06/08				FCP1636	LUCAS/TRW	
2.0 TFSI	125	10/06 → 06/08	FCP1717	ATE	PR1LB,1LE(288mm disc)1LT,1LF(312mm disc)			
2.0 TFSI	125	10/06 → 06/08				FCP1491	LUCAS/TRW	
2.0 TFSI	125	10/06 → 06/08				FCP1636	LUCAS/TRW	
2.0 TFSI	147	11/04 → 06/08	FCP1629	ATE	PR 1LA, 1LC			
2.0 TFSI	147	11/04 → 06/08	FCP1717	ATE	PR1LB,1LE(288mm disc)1LT,1LF(312mm disc)			
2.0 TFSI	147	11/04 → 06/08				FCP1491	LUCAS/TRW	
2.0 TFSI	147	11/04 → 06/08				FCP1636	LUCAS/TRW	
2.0 TFSI	162	06/05 → 10/07	FCP1629	ATE	PR 1LJ/ 1LA/1LC			
2.0 TFSI	162	06/05 → 06/08	FCP1717	ATE	PR1LB,1LE(288mm disc)1LT,1LF(312mm disc)			
2.0 TFSI	162	06/05 → 10/07				FCP1655	LUCAS/TRW	PR 1KE
2.0 TFSI	162	06/05 → 06/08				FCP1491	LUCAS/TRW	
2.0 TFSI	162	06/05 → 06/08				FCP1636	LUCAS/TRW	
2.0 TFSI quattro	147	11/04 → 06/08	FCP1629	ATE	PR 1LA, 1LC			
2.0 TFSI quattro	147	11/04 → 06/08	FCP1717	ATE	PR1LB,1LE(288mm disc)1LT,1LF(312mm disc)			
2.0 TFSI quattro	147	11/04 → 06/08				FCP1491	LUCAS/TRW	
2.0 TFSI quattro	147	11/04 → 06/08				FCP1636	LUCAS/TRW	
2.0 TFSI quattro	162	06/05 → 06/08	FCP1717	ATE	PR1LB,1LE(288mm disc)1LT,1LF(312mm disc)			
2.0 TFSI quattro	162	06/05 → 06/08				FCP1491	LUCAS/TRW	
2.0 TFSI quattro	162	06/05 → 06/08				FCP1636	LUCAS/TRW	
2.5 TDI	120	11/04 → 05/06	FCP1629	ATE	PR 1LA, 1LC			
2.5 TDI	120	11/04 → 05/06	FCP1717	ATE	PR1LB,1LE(288mm disc)1LT,1LF(312mm disc)			
2.5 TDI	120	11/04 → 05/06				FCP1491	LUCAS/TRW	
2.5 TDI	120	11/04 → 05/06				FCP1636	LUCAS/TRW	
2.7 TDi	120	11/05 → 03/08	FCP1717	ATE	PR1LB,1LE(288mm disc)1LT,1LF(312mm disc)			
2.7 TDi	120	11/05 → 03/08				FCP1491	LUCAS/TRW	
2.7 TDi	120	11/05 → 03/08				FCP1636	LUCAS/TRW	
2.7 TDI	132	01/06 → 06/08	FCP1717	ATE	PR1LB,1LE(288mm disc)1LT,1LF(312mm disc)			
2.7 TDI	132	01/06 → 06/08				FCP1491	LUCAS/TRW	
2.7 TDI	132	01/06 → 06/08				FCP1636	LUCAS/TRW	
3.0	160	11/04 → 05/06	FCP1717	ATE	PR1LB,1LE(288mm disc)1LT,1LF(312mm disc)			
3.0	160	11/04 → 05/06				FCP1491	LUCAS/TRW	

For material availability see page 16-18 / Per la disponibilità materiali vedere a pagina 16-18

...AUDI

...A4 Avant (8ED, B7)

	kW				NOTE			NOTE
3.0	160	11/04 → 05/06				FCP1636	LUCAS/TRW	
3.0 quattro	160	11/04 → 07/06	FCP1717	ATE	PR1LB,1LE(288mm disc)1LT,1LF(312mm disc)			
3.0 quattro	160	11/04 → 07/06				FCP1491	LUCAS/TRW	
3.0 quattro	160	11/04 → 07/06				FCP1636	LUCAS/TRW	
3.0 TDI quattro	150	11/04 → 06/08	FCP1629	ATE	PR 1LA, 1LC			
3.0 TDI quattro	150	11/04 → 06/08	FCP1717	ATE	PR1LB,1LE(288mm disc)1LT,1LF(312mm disc)			
3.0 TDI quattro	150	11/04 → 06/08				FCP1491	LUCAS/TRW	
3.0 TDI quattro	150	11/04 → 06/08				FCP1636	LUCAS/TRW	
3.0 TDI quattro	171	01/06 → 06/08	FCP1717	ATE	PR1LB,1LE(288mm disc)1LT,1LF(312mm disc)			
3.0 TDI quattro	171	01/06 → 06/08				FCP1491	LUCAS/TRW	
3.0 TDI quattro	171	01/06 → 06/08				FCP1636	LUCAS/TRW	
3.2 FSI	188	01/05 → 06/08	FCP1629	ATE	PR 1LA, 1LC			
3.2 FSI	188	01/05 → 06/08	FCP1717	ATE	PR1LB,1LE(288mm disc)1LT,1LF(312mm disc)			
3.2 FSI	188	01/05 → 06/08				FCP1636	LUCAS/TRW	
3.2 FSI	188	01/05 → 06/08				FCP1491	LUCAS/TRW	
3.2 FSI	188	01/05 → 06/08				FCP1636	LUCAS/TRW	
3.2 FSI quattro	188	01/05 → 06/08	FCP1629	ATE	PR 1LA, 1LC			
3.2 FSI quattro	188	01/05 → 06/08	FCP1717	ATE	PR1LB,1LE(288mm disc)1LT,1LF(312mm disc)			
3.2 FSI quattro	188	01/05 → 06/08				FCP1636	LUCAS/TRW	
3.2 FSI quattro	188	01/05 → 06/08				FCP1491	LUCAS/TRW	
3.2 FSI quattro	188	01/05 → 06/08				FCP1636	LUCAS/TRW	
RS4 quattro	309	09/05 → 06/08	FCP1664	BREMBO	PR 1LP			
RS4 quattro	309	09/05 → 06/08	FCP4467	BREMBO	NOT FOR CERAMIC DISCS			
RS4 quattro	309	09/05 → 06/08				FCP1655	LUCAS/TRW	

A4 Avant (8K5, B8)

2.0 TDI	100	04/08 →	FCP4044	LUCAS/TRW	PR 1LA			
2.0 TDI	100	04/08 →	FCP4045	ATE	PR 1LT			
2.0 TDI	100	04/08 →				FCP4050	LUCAS/TRW	PR 1KE, 1KW
2.0 TDI	105	04/08 →	FCP4044	LUCAS/TRW	PR 1LA			
2.0 TDI	105	04/08 →	FCP4045	ATE	PR 1LT			
2.0 TDI	105	04/08 →				FCP4050	LUCAS/TRW	PR 1KE, 1KW
2.0 TDI	120	04/08 →	FCP4044	LUCAS/TRW	PR 1LA			
2.0 TDI	120	04/08 →				FCP4050	LUCAS/TRW	PR 1KE, 1KW
2.0 TDI	120	08/08 →	FCP4045	ATE	PR 1LT			
2.0 TDI	120	08/08 →				FCP4050	LUCAS/TRW	PR 1KE, 1KW
2.0 TDI	125	04/08 →	FCP4044	LUCAS/TRW	PR 1LA			
2.0 TDI	125	04/08 →	FCP4045	ATE	PR 1LT			
2.0 TDI	125	04/08 →				FCP4050	LUCAS/TRW	PR 1KE, 1KW
2.0 TDI	88	06/08 →	FCP4044	LUCAS/TRW	PR 1LA			
2.0 TDI	88	06/08 →	FCP4045	ATE	PR 1LT			
2.0 TDI	88	06/08 →				FCP4050	LUCAS/TRW	PR 1KE, 1KW
2.0 TFSI	132	06/08 →	FCP4044	LUCAS/TRW	PR 1LA			
2.0 TFSI	132	06/08 →				FCP4050	LUCAS/TRW	PR 1KE, 1KW
2.0 TFSI	155	06/08 →	FCP4044	LUCAS/TRW	PR 1LA			
2.0 TFSI	155	06/08 →				FCP4050	LUCAS/TRW	PR 1KE, 1KW
2.0 TFSI Quattro	155	06/08 →	FCP4044	LUCAS/TRW	PR 1LA			
2.0 TFSI Quattro	155	06/08 →				FCP4050	LUCAS/TRW	PR 1KE, 1KW
2.7 TDI	120	04/08 →	FCP4044	LUCAS/TRW	PR 1LA			
2.7 TDI	120	04/08 →				FCP4050	LUCAS/TRW	PR 1KE, 1KW
2.7 TDI	140	04/08 →	FCP4044	LUCAS/TRW	PR 1LA			
2.7 TDI	140	04/08 →				FCP4050	LUCAS/TRW	PR 1KE, 1KW
3.0 TDI Quattro	176	04/08 →	FCP4044	LUCAS/TRW	PR 1LA			
3.0 TDI Quattro	176	04/08 →				FCP4050	LUCAS/TRW	PR 1KE, 1KW
3.2 FSI	195	09/08 →	FCP4044	LUCAS/TRW	PR 1LA			
3.2 FSI	195	09/08 →				FCP4050	LUCAS/TRW	PR 1KE, 1KW
3.2 FSI quattro	195	04/08 →	FCP4044	LUCAS/TRW	PR 1LA			
3.2 FSI quattro	195	04/08 →				FCP4050	LUCAS/TRW	PR 1KE, 1KW
RS4 quattro	331	05/12 →	FCP1664	BREMBO	PR 1LM			
RS4 quattro	331	05/12 →	FCP4467	BREMBO	NOT FOR CERAMIC DISCS			
RS4 quattro	331	05/12 →				FCP4050	LUCAS/TRW	

A4 Convertible (8H7, B6, 8HE, B7)

1.8 T	120	07/02 → 03/09	FCP1717	ATE	PR1LB,1LE(288mm disc)1LT,1LF(312mm disc)			
1.8 T	120	07/02 → 03/09				FCP1491	LUCAS/TRW	
1.8 T quattro	120	05/03 → 03/09	FCP1717	ATE	PR1LB,1LE(288mm disc)1LT,1LF(312mm disc)			
1.8 T quattro	120	05/03 → 03/09				FCP1491	LUCAS/TRW	
2.0 TDI	100	01/06 → 03/09	FCP1717	ATE	PR1LB,1LE(288mm disc)1LT,1LF(312mm disc)			
2.0 TDI	100	01/06 → 03/09				FCP1491	LUCAS/TRW	
2.0 TDI	103	01/06 → 03/09	FCP1717	ATE	PR1LB,1LE(288mm disc)1LT,1LF(312mm disc)			
2.0 TDI	103	01/06 → 03/09				FCP1491	LUCAS/TRW	
2.0 TFSI 16V	147	01/06 → 03/09	FCP1717	ATE	PR1LB,1LE(288mm disc)1LT,1LF(312mm disc)			
2.0 TFSI 16V	147	01/06 → 03/09				FCP1491	LUCAS/TRW	
2.4	120	04/02 → 12/05	FCP1717	ATE	PR1LB,1LE(288mm disc)1LT,1LF(312mm disc)			
2.4	120	04/02 → 12/05				FCP1491	LUCAS/TRW	
2.5 TDI	120	08/02 → 12/05	FCP1717	ATE	PR1LB,1LE(288mm disc)1LT,1LF(312mm disc)			
2.5 TDI	120	08/02 → 12/05				FCP1491	LUCAS/TRW	

For material availability see page 16-18 / Per la disponibilità materiali vedere a pagina 16-18

...AUDI

			kW				NOTE			NOTE
...A4 Convertible (8H7, B6, 8HE, B7)										
2.7 TDI	132	06/06 → 03/09	**FCP1717**	ATE	PR1LB,1LE(288mm disc)1LT,1LF(312mm disc)					
2.7 TDI	132	06/06 → 03/09				**FCP1491**	LUCAS/TRW			
3.0 quattro	162	05/03 → 12/05	**FCP1717**	ATE	PR1LB,1LE(288mm disc)1LT,1LF(312mm disc)					
3.0 quattro	162	05/03 → 12/05				**FCP1491**	LUCAS/TRW			
3.0 quattro	162	05/03 → 12/05				**FCP1655**	LUCAS/TRW			
3.0 TDI quattro	150	01/06 → 03/09	**FCP1717**	ATE	PR1LB,1LE(288mm disc)1LT,1LF(312mm disc)					
3.0 TDI quattro	150	01/06 → 03/09				**FCP1491**	LUCAS/TRW			
3.0 TDI quattro	150	01/06 → 03/09				**FCP1655**	LUCAS/TRW			
3.0 TDI quattro	171	01/06 → 03/09	**FCP1717**	ATE	PR1LB,1LE(288mm disc)1LT,1LF(312mm disc)					
3.0 TDI quattro	171	01/06 → 03/09				**FCP1491**	LUCAS/TRW			
3.0 TDI quattro	171	01/06 → 03/09				**FCP1655**	LUCAS/TRW			
3.2 FSI	188	01/06 → 03/09	**FCP1629**	ATE	PR 1LA					
3.2 FSI	188	01/06 → 03/09	**FCP1717**	ATE	PR1LB,1LE(288mm disc)1LT,1LF(312mm disc)					
3.2 FSI	188	01/06 → 03/09				**FCP1655**	LUCAS/TRW			
3.2 FSI	188	01/06 → 03/09				**FCP1491**	LUCAS/TRW			
3.2 FSI	188	01/06 → 03/09				**FCP1655**	LUCAS/TRW			
3.2 FSI quattro	188	01/06 → 03/09	**FCP1717**	ATE	PR1LB,1LE(288mm disc)1LT,1LF(312mm disc)					
3.2 FSI quattro	188	01/06 → 03/09				**FCP1491**	LUCAS/TRW			
3.2 FSI quattro	188	01/06 → 03/09				**FCP1655**	LUCAS/TRW			
RS4 quattro	309	06/06 → 03/09	**FCP1664**	BREMBO	PR 1LP					
RS4 quattro	309	06/06 → 03/09	**FCP4467**	BREMBO	NOT FOR CERAMIC DISCS					
RS4 quattro	309	06/06 → 03/09				**FCP1655**	LUCAS/TRW			
S4 quattro	253	03/04 → 03/09	**FCP1629**	ATE	PR 1LJ					
S4 quattro	253	03/04 → 03/09				**FCP1655**	LUCAS/TRW	PR 1KE		
A5 (8T3)										
1.8 TFSI	125	10/07 →	**FCP4045**	ATE						
1.8 TFSI	125	10/07 →				**FCP4050**	LUCAS/TRW			
2.0 TFSI	132	11/08 →	**FCP4044**	LUCAS/TRW						
2.0 TFSI	132	11/08 →				**FCP4050**	LUCAS/TRW			
2.0 TSFI Quattro	155	06/08 →	**FCP4044**	LUCAS/TRW						
2.0 TSFI Quattro	155	06/08 →				**FCP4050**	LUCAS/TRW			
2.7 TDi	140	06/07 →	**FCP4044**	LUCAS/TRW						
2.7 TDi	140	06/07 →				**FCP4050**	LUCAS/TRW			
3.0 TDi Quattro	176	06/07 →	**FCP4044**	LUCAS/TRW						
3.0 TDi Quattro	176	06/07 →				**FCP4050**	LUCAS/TRW			
3.2 FSI	195	06/07 →	**FCP4044**	LUCAS/TRW						
3.2 FSI	195	06/07 →				**FCP4050**	LUCAS/TRW			
3.2 FSI Quattro	195	06/07 →	**FCP4044**	LUCAS/TRW						
3.2 FSI Quattro	195	06/07 →				**FCP4050**	LUCAS/TRW			
RS5 quattro	331	03/10 →	**FCP1664**	BREMBO	PR 1LM					
RS5 quattro	331	03/10 →	**FCP4467**	BREMBO	NOT FOR CERAMIC DISCS					
RS5 quattro	331	03/10 →				**FCP1655**	LUCAS/TRW			
S5 quattro	260	06/07 →	**FCP4044**	LUCAS/TRW	320mm					
S5 quattro	260	06/07 →				**FCP4050**	LUCAS/TRW			
A5 Convertible (8F7)										
RS5 quattro	331	02/13 →	**FCP1664**	Brembo						
RS5 quattro	331	02/13 →	**FCP4467**	BREMBO	NOT FOR CERAMIC DISCS					
A6 (4A, C4)										
1.8 20V	92	12/95 → 02/97	**FCP590**	ATE						
1.8 20V	92	12/95 → 02/97				**FCP596**	LUCAS/TRW			
1.8 20V quattro	92	12/95 → 02/97	**FCP590**	ATE						
1.8 20V quattro	92	12/95 → 02/97				**FCP596**	LUCAS/TRW			
1.9 TDi	66	06/94 → 02/97	**FCP590**	ATE						
1.9 TDi	66	06/94 → 02/97				**FCP596**	LUCAS/TRW			
2.0 16V	103	06/94 → 02/97	**FCP590**	ATE						
2.0 16V	103	06/94 → 02/97				**FCP596**	LUCAS/TRW			
2.0 16V quattro	103	06/94 → 02/97	**FCP590**	ATE						
2.0 16V quattro	103	06/94 → 02/97				**FCP596**	LUCAS/TRW			
2.3 quattro	98	06/94 → 12/97	**FCP590**	ATE						
2.3 quattro	98	06/94 → 12/97				**FCP596**	LUCAS/TRW			
2.4 30V quattro	121	03/97 → 04/04	**FCP1323**	ATE						
2.4 30V quattro	121	03/97 → 04/04				**FCP541**	LUCAS/TRW			
2.5 TDi quattro	103	06/94 → 12/97	**FCP590**	ATE						
2.5 TDi quattro	103	06/94 → 12/97				**FCP596**	LUCAS/TRW			
2.6 quattro	110	06/94 → 02/97	**FCP590**	ATE						
2.6 quattro	110	06/94 → 02/97				**FCP596**	LUCAS/TRW			
2.8 30V quattro	142	06/94 → 02/97	**FCP590**	ATE						
2.8 30V quattro	142	06/94 → 02/97				**FCP596**	LUCAS/TRW			
S6 4.2 quattro	213	06/94 → 10/97				**FCP596**	LUCAS/TRW			
S6 Plus quattro	240	04/94 → 10/97				**FCP596**	LUCAS/TRW			

For material availability see page 16-18 / Per la disponibilità materiali vedere a pagina 16-18

FERODO RACING
Updated on November 2020

...AUDI

A6 (4B2, C5)

	kW				NOTE			NOTE
1.8	92	07/97 → 01/05	FCP1717	ATE	PR 1LB,1LE-1LF,1LT(288-312disc)da ch.4B-X-070001			
1.8	92	07/97 → 01/05				FCP1491	LUCAS/TRW	
1.8 i Turbo 20V	110	01/97 → 03/04	FCP1323	ATE				
1.8 i Turbo 20V	132	01/97 → 03/04	FCP1323	ATE				
1.8 T	110	01/97 → 01/05	FCP1717	ATE	PR 1LB,1LE-1LF,1LT(288-312disc)da ch.4B-X-070001			
1.8 T	110	01/97 → 01/05				FCP1491	LUCAS/TRW	
1.8 T	132	12/97 → 01/05	FCP1717	ATE	PR 1LB,1LE-1LF,1LT(288-312disc)da ch.4B-X-070001			
1.8 T	132	12/97 → 01/05				FCP1491	LUCAS/TRW	
1.8 T quattro	110	02/97 → 01/05	FCP1717	ATE	PR 1LB,1LE-1LF,1LT(288-312disc)da ch.4B-X-070001			
1.8 T quattro	110	02/97 → 01/05				FCP1491	LUCAS/TRW	
1.8 T quattro	132	12/97 → 01/05	FCP1717	ATE	PR 1LB,1LE-1LF,1LT(288-312disc)da ch.4B-X-070001			
1.8 T quattro	132	12/97 → 01/05				FCP1491	LUCAS/TRW	
1.9 TDI	81	04/97 → 10/00	FCP1717	ATE	PR 1LB,1LE-1LF,1LT(288-312disc)da ch.4B-X-070001			
1.9 TDI	81	04/97 → 10/00				FCP1491	LUCAS/TRW	
1.9 TDI	85	07/00 → 01/05	FCP1717	ATE	PR 1LB,1LE-1LF,1LT(288-312disc)da ch.4B-X-070001			
1.9 TDI	85	07/00 → 01/05				FCP1491	LUCAS/TRW	
1.9 TDI	96	08/01 → 01/05	FCP1717	ATE	PR 1LB,1LE-1LF,1LT(288-312disc)da ch.4B-X-070001			
1.9 TDI	96	08/01 → 01/05				FCP1491	LUCAS/TRW	
1.9 TDi	81	03/97 → 03/04	FCP1323	ATE				
1.9 TDi	81	12/97 → 04/04	FCP1323	ATE				
2.0	96	08/01 → 01/05	FCP1717	ATE	PR 1LB,1LE-1LF,1LT(288-312disc)da ch.4B-X-070001			
2.0	96	08/01 → 01/05				FCP1491	LUCAS/TRW	
2.0 i	103	03/97 → 03/04	FCP1323	ATE				
2.0 i	96	03/97 → 03/04	FCP1323	ATE				
2.0 i	96	08/01 → 04/04	FCP1323	ATE				
2.4	100	07/98 → 01/05	FCP1717	ATE	PR 1LB,1LE-1LF,1LT(288-312disc)da ch.4B-X-070001			
2.4	100	07/98 → 01/05				FCP1491	LUCAS/TRW	
2.4	115	02/97 → 01/05	FCP1717	ATE	PR 1LB,1LE-1LF,1LT(288-312disc)da ch.4B-X-070001			
2.4	115	02/97 → 01/05				FCP1491	LUCAS/TRW	
2.4	120	02/97 → 01/05	FCP1717	ATE	PR 1LB,1LE-1LF,1LT(288-312disc)da ch.4B-X-070001			
2.4	120	02/97 → 01/05				FCP1491	LUCAS/TRW	
2.4	121	02/97 → 01/05	FCP1717	ATE	PR 1LB,1LE-1LF,1LT(288-312disc)da ch.4B-X-070001			
2.4	121	02/97 → 01/05				FCP1491	LUCAS/TRW	
2.4	125	08/01 → 01/05	FCP1717	ATE	PR 1LB,1LE-1LF,1LT(288-312disc)da ch.4B-X-070001			
2.4	125	08/01 → 01/05				FCP1491	LUCAS/TRW	
2.4 30V	100	05/97 → 03/04	FCP1323	ATE				
2.4 30V	100	05/97 → 03/04				FCP541	LUCAS/TRW	
2.4 30V	120	05/97 → 03/04	FCP1323	ATE				
2.4 30V	120	05/97 → 03/04				FCP541	LUCAS/TRW	
2.4 30V	121	05/97 → 03/04	FCP1323	ATE				
2.4 30V	121	05/97 → 03/04				FCP541	LUCAS/TRW	
2.4 quattro	115	08/98 → 07/99	FCP1717	ATE	PR 1LB,1LE-1LF,1LT(288-312disc)da ch.4B-X-070001			
2.4 quattro	115	08/98 → 07/99				FCP1491	LUCAS/TRW	
2.4 quattro	120	02/97 → 01/05	FCP1717	ATE	PR 1LB,1LE-1LF,1LT(288-312disc)da ch.4B-X-070001			
2.4 quattro	120	02/97 → 01/05				FCP1491	LUCAS/TRW	
2.4 quattro	121	02/97 → 01/05	FCP1717	ATE	PR 1LB,1LE-1LF,1LT(288-312disc)da ch.4B-X-070001			
2.4 quattro	121	02/97 → 01/05				FCP1491	LUCAS/TRW	
2.4 quattro	125	08/01 → 01/05	FCP1717	ATE	PR 1LB,1LE-1LF,1LT(288-312disc)da ch.4B-X-070001			
2.4 quattro	125	08/01 → 01/05				FCP1491	LUCAS/TRW	
2.5 TDi	85	04/97 → 03/04	FCP1323	ATE				
2.5 TDI	110	07/97 → 01/05	FCP1717	ATE	PR 1LB,1LE-1LF,1LT(288-312disc)da ch.4B-X-070001			
2.5 TDI	110	07/97 → 01/05				FCP1491	LUCAS/TRW	
2.5 TDI	114	08/01 → 01/05	FCP1717	ATE	PR 1LB,1LE-1LF,1LT(288-312disc)da ch.4B-X-070001			
2.5 TDI	114	08/01 → 01/05				FCP1491	LUCAS/TRW	
2.5 TDI	120	07/02 → 01/05	FCP1717	ATE	PR 1LB,1LE-1LF,1LT(288-312disc)da ch.4B-X-070001			
2.5 TDI	120	07/02 → 01/05				FCP1491	LUCAS/TRW	
2.5 TDI	132	02/00 → 01/05	FCP1717	ATE	PR 1LB,1LE-1LF,1LT(288-312disc)da ch.4B-X-070001			
2.5 TDI	132	02/00 → 01/05				FCP1491	LUCAS/TRW	
2.5 TDi	85	12/97 → 04/04	FCP1323	ATE				
2.5 TDI quattro	110	07/97 → 01/05	FCP1717	ATE	PR 1LB,1LE-1LF,1LT(288-312disc)da ch.4B-X-070001			
2.5 TDI quattro	110	07/97 → 01/05				FCP1491	LUCAS/TRW	
2.5 TDI quattro	132	02/00 → 01/05	FCP1717	ATE	PR 1LB,1LE-1LF,1LT(288-312disc)da ch.4B-X-070001			
2.5 TDI quattro	132	02/00 → 01/05				FCP1491	LUCAS/TRW	
2.8	132	10/97 → 05/00	FCP1717	ATE	PR 1LB,1LE-1LF,1LT(288-312disc)da ch.4B-X-070001			
2.8	132	10/97 → 05/00				FCP1491	LUCAS/TRW	
2.8	140	07/99 → 01/05	FCP1717	ATE	PR 1LB,1LE-1LF,1LT(288-312disc)da ch.4B-X-070001			
2.8	140	07/99 → 01/05				FCP1491	LUCAS/TRW	
2.8	142	02/97 → 01/05	FCP1717	ATE	PR 1LB,1LE-1LF,1LT(288-312disc)da ch.4B-X-070001			
2.8	142	02/97 → 01/05				FCP1491	LUCAS/TRW	
2.8 i	142	03/97 → 03/04	FCP1323	ATE				
2.8 quattro	142	02/97 → 01/05	FCP1717	ATE	PR 1LB,1LE-1LF,1LT(288-312disc)da ch.4B-X-070001			
2.8 quattro	142	02/97 → 01/05				FCP1491	LUCAS/TRW	
3.0	162	08/01 → 01/05	FCP1629	ATE				
3.0 Quattro	220	08/01 → 01/05	FCP1629	ATE				
RS6 quattro	331	07/02 → 01/05	FCP1664	BREMBO				
RS6 quattro	331	07/02 → 01/05				FCP1655	LUCAS/TRW	

For material availability see page 16-18 / Per la disponibilità materiali vedere a pagina 16-18

...AUDI

A6 (4F2, C6)

	kW				NOTE			NOTE
2.0 TDI	100	07/04 → 03/11	FCP1717	ATE	PR1LT(314mm disc)			
2.0 TDI	100	07/04 → 03/11				FCP1636	LUCAS/TRW	
2.0 TDI	100	07/04 → 03/11				FCP1655	LUCAS/TRW	
2.0 TDI	103	07/04 → 10/08	FCP1717	ATE	PR1LT(314mm disc)			
2.0 TDI	103	07/04 → 10/08				FCP1636	LUCAS/TRW	
2.0 TDI	103	07/04 → 10/08				FCP1655	LUCAS/TRW	
2.0 TDI	120	04/09 → 03/11	FCP1717	ATE	PR1LT(314mm disc)			
2.0 TDI	120	04/09 → 03/11				FCP1636	LUCAS/TRW	
2.0 TDI	120	04/09 → 03/11				FCP1655	LUCAS/TRW	
2.0 TDI	125	11/08 → 03/11	FCP1717	ATE	PR1LT(314mm disc)			
2.0 TDI	125	11/08 → 03/11				FCP1636	LUCAS/TRW	
2.0 TDI	125	11/08 → 03/11				FCP1655	LUCAS/TRW	
2.0 TDI	89	09/05 → 06/06	FCP1717	ATE	PR1LT(314mm disc)			
2.0 TDI	89	09/05 → 06/06				FCP1636	LUCAS/TRW	
2.0 TDI	89	09/05 → 06/06				FCP1655	LUCAS/TRW	
2.0 TFSI	125	06/05 → 03/11	FCP1717	ATE	PR1LT(314mm disc)			
2.0 TFSI	125	06/05 → 03/11				FCP1636	LUCAS/TRW	
2.0 TFSI	125	06/05 → 03/11				FCP1655	LUCAS/TRW	
2.4	130	05/04 → 10/08	FCP1717	ATE	PR1LT(314mm disc)			
2.4	130	05/04 → 10/08				FCP1636	LUCAS/TRW	
2.4	130	05/04 → 10/08				FCP1655	LUCAS/TRW	
2.4 quattro	130	01/05 → 10/08	FCP1717	ATE	PR1LT(314mm disc)			
2.4 quattro	130	01/05 → 10/08				FCP1636	LUCAS/TRW	
2.4 quattro	130	01/05 → 10/08				FCP1655	LUCAS/TRW	
2.7 TDI	120	11/04 → 03/11	FCP1717	ATE	PR1LT(314mm disc)			
2.7 TDI	120	11/04 → 03/11				FCP1636	LUCAS/TRW	
2.7 TDI	120	11/04 → 03/11				FCP1655	LUCAS/TRW	
2.7 TDI	132	11/04 → 10/08	FCP1717	ATE	PR1LT(314mm disc)			
2.7 TDI	132	11/04 → 10/08				FCP1636	LUCAS/TRW	
2.7 TDI	132	11/04 → 10/08				FCP1655	LUCAS/TRW	
2.7 TDI	140	10/08 → 03/11	FCP1717	ATE	PR1LT(314mm disc)			
2.7 TDI	140	10/08 → 03/11				FCP1636	LUCAS/TRW	
2.7 TDI	140	10/08 → 03/11				FCP1655	LUCAS/TRW	
2.7 TDI quattro	120	06/05 → 03/11	FCP1717	ATE	PR1LT(314mm disc)			
2.7 TDI quattro	120	06/05 → 03/11				FCP1636	LUCAS/TRW	
2.7 TDI quattro	120	06/05 → 03/11				FCP1655	LUCAS/TRW	
2.7 TDI quattro	132	11/04 → 10/08	FCP1717	ATE	PR1LT(314mm disc)			
2.7 TDI quattro	132	11/04 → 10/08				FCP1636	LUCAS/TRW	
2.7 TDI quattro	132	11/04 → 10/08				FCP1655	LUCAS/TRW	
2.7 TDI quattro	140	10/08 → 03/11	FCP1717	ATE	PR1LT(314mm disc)			
2.7 TDI quattro	140	10/08 → 03/11				FCP1636	LUCAS/TRW	
2.7 TDI quattro	140	10/08 → 03/11				FCP1655	LUCAS/TRW	
2.8 FSI	140	10/08 → 03/11	FCP1717	ATE	PR1LT(314mm disc)			
2.8 FSI	140	10/08 → 03/11				FCP1636	LUCAS/TRW	
2.8 FSI	140	10/08 → 03/11				FCP1655	LUCAS/TRW	
2.8 FSI	154	11/06 → 10/08	FCP1717	ATE	PR1LT(314mm disc)			
2.8 FSI	154	11/06 → 10/08				FCP1636	LUCAS/TRW	
2.8 FSI	154	11/06 → 10/08				FCP1655	LUCAS/TRW	
2.8 FSI	162	10/08 → 03/11	FCP1717	ATE	PR1LT(314mm disc)			
2.8 FSI	162	10/08 → 03/11				FCP1636	LUCAS/TRW	
2.8 FSI	162	10/08 → 03/11				FCP1655	LUCAS/TRW	
2.8 FSI quattro	140	10/08 → 03/11	FCP1717	ATE	PR1LT(314mm disc)			
2.8 FSI quattro	140	10/08 → 03/11				FCP1636	LUCAS/TRW	
2.8 FSI quattro	140	10/08 → 03/11				FCP1655	LUCAS/TRW	
2.8 FSI quattro	154	06/07 → 10/08	FCP1717	ATE	PR1LT(314mm disc)			
2.8 FSI quattro	154	06/07 → 10/08				FCP1636	LUCAS/TRW	
2.8 FSI quattro	154	06/07 → 10/08				FCP1655	LUCAS/TRW	
2.8 FSI quattro	162	10/08 → 03/11	FCP1717	ATE	PR1LT(314mm disc)			
2.8 FSI quattro	162	10/08 → 03/11				FCP1636	LUCAS/TRW	
2.8 FSI quattro	162	10/08 → 03/11				FCP1655	LUCAS/TRW	
3.0	160	08/04 → 05/06	FCP1717	ATE	PR1LT(314mm disc)			
3.0	160	08/04 → 05/06				FCP1636	LUCAS/TRW	
3.0	160	08/04 → 05/06				FCP1655	LUCAS/TRW	
3.0 quattro	160	05/04 → 05/06	FCP1717	ATE	PR1LT(314mm disc)			
3.0 quattro	160	05/04 → 05/06				FCP1636	LUCAS/TRW	
3.0 quattro	160	05/04 → 05/06				FCP1655	LUCAS/TRW	
3.0 TDI	171	06/06 → 03/11	FCP1717	ATE	PR1LT(314mm disc)			
3.0 TDI	171	06/06 → 03/11				FCP1636	LUCAS/TRW	
3.0 TDI	171	06/06 → 03/11				FCP1655	LUCAS/TRW	
3.0 TDI quattro	155	05/04 → 03/11	FCP1717	ATE	PR1LT(314mm disc)			
3.0 TDI quattro	155	05/04 → 03/11				FCP1636	LUCAS/TRW	
3.0 TDI quattro	155	05/04 → 03/11				FCP1655	LUCAS/TRW	
3.0 TDI quattro	165	05/04 → 05/06	FCP1629	ATE	PR 1LD/1LG 1LH/1ZL			
3.0 TDI quattro	165	05/04 → 05/06	FCP1717	ATE	PR1LT(314mm disc)			
3.0 TDI quattro	165	05/04 → 05/06				FCP1636	LUCAS/TRW	
3.0 TDI quattro	165	05/04 → 05/06				FCP1655	LUCAS/TRW	PR 1KW/2EE
3.0 TDI quattro	171	06/06 → 10/08	FCP1717	ATE	PR1LT(314mm disc)			
3.0 TDI quattro	171	06/06 → 10/08				FCP1636	LUCAS/TRW	

For material availability see page 16-18 / Per la disponibilità materiali vedere a pagina 16-18

...AUDI

	kW				NOTE			NOTE
...A6 (4F2, C6)								
3.0 TDI quattro	171	06/06 → 10/08				FCP1655	LUCAS/TRW	
3.0 TDI quattro	176	10/08 → 03/11	FCP1717	ATE	PR1LT(314mm disc)			
3.0 TDI quattro	176	10/08 → 03/11				FCP1636	LUCAS/TRW	
3.0 TDI quattro	176	10/08 → 03/11				FCP1655	LUCAS/TRW	
3.0 TFSI quattro	213	10/08 → 03/11	FCP1717	ATE	PR1LT(314mm disc)			
3.0 TFSI quattro	213	10/08 → 03/11				FCP1636	LUCAS/TRW	
3.0 TFSI quattro	213	10/08 → 03/11				FCP1655	LUCAS/TRW	
3.2 FSI	188	05/04 → 05/09	FCP1717	ATE	PR1LT(314mm disc)			
3.2 FSI	188	05/04 → 05/09				FCP1636	LUCAS/TRW	
3.2 FSI	188	05/04 → 05/09				FCP1655	LUCAS/TRW	
3.2 FSI quattro	183	09/06 → 10/08	FCP1717	ATE	PR1LT(314mm disc)			
3.2 FSI quattro	183	09/06 → 10/08				FCP1636	LUCAS/TRW	
3.2 FSI quattro	183	09/06 → 10/08				FCP1655	LUCAS/TRW	
3.2 FSI quattro	188	05/04 → 10/08	FCP1717	ATE	PR1LT(314mm disc)			
3.2 FSI quattro	188	05/04 → 10/08				FCP1636	LUCAS/TRW	
3.2 FSI quattro	188	05/04 → 10/08				FCP1655	LUCAS/TRW	
4.2 FSI Quattro	257	06/06 → 03/11	FCP1629	ATE	PR 1LD,1LG,1LH,1ZL			
4.2 FSI Quattro	257	06/06 → 03/11	FCP1717	ATE	PR1LT(314mm disc)			
4.2 FSI Quattro	257	06/06 → 03/11				FCP1636	LUCAS/TRW	
4.2 FSI Quattro	257	06/06 → 03/11				FCP1655	LUCAS/TRW	PR 1KW/2EE
4.2 Quattro	246	05/04 → 05/06	FCP1629	ATE	PR 1LD,1LG,1LH,1ZL			
4.2 Quattro	246	05/04 → 05/06	FCP1717	ATE	PR1LT(314mm disc)			
4.2 Quattro	246	05/04 → 05/06				FCP1636	LUCAS/TRW	
4.2 Quattro	246	05/04 → 05/06				FCP1655	LUCAS/TRW	PR 1KW/2EE
RS6 quattro	426	09/08 → 03/11	FRP3133	BREMBO	NOT FOR CERAMIC DISCS			
RS6 quattro	426	09/08 → 03/11				FCP1655	LUCAS/TRW	PR 1KJ
S6 quattro	320	03/06 → 03/11				FCP1655	LUCAS/TRW	PR 1KW/2EE/2EL
A6 (4G2, C7, 4GC)								
2.0 TDI	100	01/12 →	FCP4466	BREMBO	NOT FOR CERAMIC DISCS,Disc Diam 400,PR 1LW			
2.0 TDI	120	03/11 →	FCP4466	BREMBO	NOT FOR CERAMIC DISCS,Disc Diam 400,PR 1LW			
2.0 TDI	130	03/11 →	FCP4466	BREMBO	NOT FOR CERAMIC DISCS,Disc Diam 400,PR 1LW			
2.0 TDI	140	11/13 →	FCP4466	BREMBO	NOT FOR CERAMIC DISCS,Disc Diam 400,PR 1LW			
2.0 TFSI	155	03/11 → 05/13	FCP4466	BREMBO	NOT FOR CERAMIC DISCS,Disc Diam 400,PR 1LW			
2.0 TFSI hybrid	155	11/11 →	FCP4466	BREMBO	NOT FOR CERAMIC DISCS,Disc Diam 400,PR 1LW			
2.8 FSI	150	03/11 →	FCP4466	BREMBO	NOT FOR CERAMIC DISCS,Disc Diam 400,PR 1LW			
2.8 FSI quattro	150	03/11 →	FCP4466	BREMBO	NOT FOR CERAMIC DISCS,Disc Diam 400,PR 1LW			
3.0 TDI	150	11/10 →	FCP4466	BREMBO	NOT FOR CERAMIC DISCS,Disc Diam 400,PR 1LW			
3.0 TDI quattro	150	03/11 →	FCP4466	BREMBO	NOT FOR CERAMIC DISCS,Disc Diam 400,PR 1LW			
3.0 TDI quattro	180	03/11 →	FCP4466	BREMBO	NOT FOR CERAMIC DISCS,Disc Diam 400,PR 1LW			
3.0 TDI quattro	230	11/11 →	FCP4466	BREMBO	NOT FOR CERAMIC DISCS,Disc Diam 400,PR 1LW			
3.0 TFSI quattro	220	11/10 → 05/12	FCP4466	BREMBO	NOT FOR CERAMIC DISCS,Disc Diam 400,PR 1LW			
3.0 TFSI quattro	228	03/11 →	FCP4466	BREMBO	NOT FOR CERAMIC DISCS,Disc Diam 400,PR 1LW			
S6 quattro	309	02/12 →	FCP4468	BREMBO	NOT FOR CERAMIC DISCS,Disc Diam 400,PR 1LU			
S6 quattro	309	02/12 →	FCP4466	BREMBO	NOT FOR CERAMIC DISCS,Disc Diam 400,PR 1LW			
S6 quattro	331	10/14 →	FCP4468	BREMBO	NOT FOR CERAMIC DISCS,Disc Diam 400,PR 1LU			
A6 Allroad (4FH, C6)								
2.7 TDI quattro	132	05/06 → 10/08	FCP1629	ATE	PR 1LD,1LG,1LH,1ZL			
2.7 TDI quattro	132	05/06 → 08/11	FCP1629	ATE	PR 1LG/1ZL			
2.7 TDI quattro	132	05/06 → 10/08				FCP1636	LUCAS/TRW	
2.7 TDI quattro	132	05/06 → 08/11				FCP1655	LUCAS/TRW	PR 1KW
2.7 TDI quattro - with electric Handbrake	120	05/06 → 08/11	FCP1629	ATE	PR 1LG/1ZL			
2.7 TDI quattro - with electric Handbrake	120	05/06 → 08/11				FCP1655	LUCAS/TRW	PR 1KW
2.7 TDI quattro - with electric Handbrake	140	05/06 → 08/11	FCP1629	ATE	PR 1LG/1ZL			
2.7 TDI quattro - with electric Handbrake	140	05/06 → 08/11				FCP1655	LUCAS/TRW	PR 1KW
3.0 TDI quattro	171	05/06 → 10/08	FCP1629	ATE	PR 1LD,1LG,1LH,1ZL			
3.0 TDI quattro	171	05/06 → 08/11	FCP1629	ATE	PR 1LG/1ZL			
3.0 TDI quattro	171	05/06 → 10/08				FCP1636	LUCAS/TRW	
3.0 TDI quattro	171	05/06 → 08/11				FCP1655	LUCAS/TRW	PR 1KW
3.0 TDI quattro - with electric Handbrake	155	05/06 → 08/11	FCP1629	ATE	PR 1LG/1ZL			
3.0 TDI quattro - with electric Handbrake	155	05/06 → 08/11				FCP1655	LUCAS/TRW	PR 1KW
3.0 TDI quattro - with electric Handbrake	176	05/06 → 08/11	FCP1629	ATE	PR 1LG/1ZL			
3.0 TDI quattro - with electric Handbrake	176	05/06 → 08/11				FCP1655	LUCAS/TRW	PR 1KW
3.0 TFSI quattro - with electric Handbrake	213	10/08 → 08/11	FCP1629	ATE	PR 1LG/1ZL			
3.0 TFSI quattro - with electric Handbrake	213	10/08 → 08/11				FCP1655	LUCAS/TRW	PR 1KW
3.2 FSI quattro	188	04/06 → 10/08	FCP1629	ATE	PR 1LG/1ZL			
3.2 FSI quattro	188	04/06 → 10/08				FCP1655	LUCAS/TRW	PR 1KW
3.2 FSI quattro	188	05/06 → 10/08	FCP1629	ATE	PR 1LD,1LG,1LH,1ZL			
3.2 FSI quattro	188	05/06 → 10/08				FCP1636	LUCAS/TRW	
4.2 FSI quattro	257	05/06 → 12/10	FCP1629	ATE	PR 1LG/1ZL			
4.2 FSI quattro	257	05/06 → 12/10	FCP1629	ATE	PR 1LD,1LG,1LH,1ZL			
4.2 FSI quattro	257	05/06 → 12/10				FCP1655	LUCAS/TRW	PR 1KW
4.2 FSI quattro	257	05/06 → 12/10				FCP1636	LUCAS/TRW	

For material availability see page 16-18 / Per la disponibilità materiali vedere a pagina 16-18

...AUDI

A6 Allroad (4GH, 4GJ)

	kW				NOTE			NOTE
3.0 TDI quattro	150	01/12 →	FCP4466	BREMBO	NOT FOR CERAMIC DISCS,Disc Diam 400,PR 1LW			
3.0 TDI quattro	180	01/12 →	FCP4466	BREMBO	NOT FOR CERAMIC DISCS,Disc Diam 400,PR 1LW			
3.0 TDI quattro	230	01/12 →	FCP4466	BREMBO	NOT FOR CERAMIC DISCS,Disc Diam 400,PR 1LW			
3.0 TFSI quattro	228	01/12 →	FCP4466	BREMBO	NOT FOR CERAMIC DISCS,Disc Diam 400,PR 1LW			

A6 Avant (4A, C4)

1.8 20V	92, 110	12/95 → 07/96	FCP590	ATE				
1.8 20V	92, 110	12/95 → 07/96				FCP596	LUCAS/TRW	
1.8 20V quattro	92	12/95 → 02/97	FCP590	ATE				
1.8 20V quattro	92	12/95 → 02/97				FCP596	LUCAS/TRW	
1.9 TDi	66	06/95 → 07/96	FCP590	ATE				
1.9 TDi	66	06/95 → 07/96				FCP596	LUCAS/TRW	
1.9 TDi	81	06/95 → 07/96	FCP590	ATE				
1.9 TDi	81	06/95 → 07/96				FCP596	LUCAS/TRW	
1.9 TDi	85	06/95 → 07/96	FCP590	ATE				
1.9 TDi	85	06/95 → 07/96				FCP596	LUCAS/TRW	
2.0 16V	103	06/94 → 02/97	FCP590	ATE				
2.0 16V	103	06/94 → 02/97				FCP596	LUCAS/TRW	
2.0 16V quattro	103	06/94 → 02/97	FCP590	ATE				
2.0 16V quattro	103	06/94 → 02/97				FCP596	LUCAS/TRW	
2.3	98	06/94 → 12/95	FCP590	ATE				
2.3	98	06/94 → 12/95				FCP596	LUCAS/TRW	
2.3 quattro	98	06/94 → 12/97	FCP590	ATE				
2.3 quattro	98	06/94 → 12/97				FCP596	LUCAS/TRW	
2.4 30V quattro	121	03/97 → 04/04	FCP1323	ATE				
2.4 30V quattro	121	03/97 → 04/04				FCP541	LUCAS/TRW	
2.5 TDi	103	06/94 → 02/97	FCP590	ATE				
2.5 TDi	103	06/94 → 02/97				FCP596	LUCAS/TRW	
2.5 TDi	85	06/94 → 03/97	FCP590	ATE				
2.5 TDi	85	06/94 → 03/97				FCP596	LUCAS/TRW	
2.5 TDi quattro	103	06/94 → 12/97	FCP590	ATE				
2.5 TDi quattro	103	06/94 → 12/97				FCP596	LUCAS/TRW	
2.6	102, 110	06/94 → 02/97	FCP590	ATE				
2.6	102, 110	06/94 → 02/97				FCP596	LUCAS/TRW	
2.6 quattro	110	06/94 → 02/97	FCP590	ATE				
2.6 quattro	110	06/94 → 02/97				FCP596	LUCAS/TRW	
2.8 30V	142	06/94 → 02/97	FCP590	ATE				
2.8 30V	142	06/94 → 02/97				FCP596	LUCAS/TRW	
2.8 30V quattro	142	06/94 → 02/97	FCP590	ATE				
2.8 30V quattro	142	06/94 → 02/97				FCP596	LUCAS/TRW	
S6 4.2 quattro	213	06/94 → 02/97				FCP596	LUCAS/TRW	
S6 Plus quattro	240	06/94 →				FCP596	LUCAS/TRW	
S6 Turbo quattro	169	06/94 → 12/97				FCP596	LUCAS/TRW	

A6 Avant (4B5, C5)

1.8	85	02/98 → 01/05	FCP1717	ATE	PR 1LB,1LE-1LF,1LT(288-312disc)da ch.4B-X-070001			
1.8	85	02/98 → 01/05				FCP1491	LUCAS/TRW	
1.8	92	12/97 → 01/05	FCP1717	ATE	PR 1LB,1LE-1LF,1LT(288-312disc)da ch.4B-X-070001			
1.8	92	12/97 → 01/05				FCP1491	LUCAS/TRW	
1.8 i Turbo 20V	110	01/97 → 03/04	FCP1323	ATE				
1.8 i Turbo 20V	132	01/97 → 03/04	FCP1323	ATE				
1.8 T	110	12/97 → 01/05	FCP1717	ATE	PR 1LB,1LE-1LF,1LT(288-312disc)da ch.4B-X-070001			
1.8 T	110	12/97 → 01/05				FCP1491	LUCAS/TRW	
1.8 T	132	04/99 → 01/05	FCP1717	ATE	PR 1LB,1LE-1LF,1LT(288-312disc)da ch.4B-X-070001			
1.8 T	132	04/99 → 01/05				FCP1491	LUCAS/TRW	
1.8 T quattro	110	12/97 → 01/05	FCP1717	ATE	PR 1LB,1LE-1LF,1LT(288-312disc)da ch.4B-X-070001			
1.8 T quattro	110	12/97 → 01/05				FCP1491	LUCAS/TRW	
1.8 T quattro	132	12/97 → 01/05	FCP1717	ATE	PR 1LB,1LE-1LF,1LT(288-312disc)da ch.4B-X-070001			
1.8 T quattro	132	12/97 → 01/05				FCP1491	LUCAS/TRW	
1.9 TDI	81	02/98 → 04/01	FCP1717	ATE	PR 1LB,1LE-1LF,1LT(288-312disc)da ch.4B-X-070001			
1.9 TDI	81	02/98 → 04/01				FCP1491	LUCAS/TRW	
1.9 TDI	85	07/00 → 01/05	FCP1717	ATE	PR 1LB,1LE-1LF,1LT(288-312disc)da ch.4B-X-070001			
1.9 TDI	85	07/00 → 01/05				FCP1491	LUCAS/TRW	
1.9 TDI	96	08/01 → 01/05	FCP1717	ATE	PR 1LB,1LE-1LF,1LT(288-312disc)da ch.4B-X-070001			
1.9 TDI	96	08/01 → 01/05				FCP1491	LUCAS/TRW	
1.9 TDi	81	03/97 → 03/04	FCP1323	ATE				
1.9 TDi	81	12/97 → 04/04	FCP1323	ATE				
2.0	96	08/01 → 01/05	FCP1717	ATE	PR 1LB,1LE-1LF,1LT(288-312disc)da ch.4B-X-070001			
2.0	96	08/01 → 01/05				FCP1491	LUCAS/TRW	
2.0 i	103	03/97 → 03/04	FCP1323	ATE				
2.0 i	96	03/97 → 03/04	FCP1323	ATE				
2.0 i	96	08/01 → 04/04	FCP1323	ATE				
2.4	100	07/98 → 01/05	FCP1717	ATE	PR 1LB,1LE-1LF,1LT(288-312disc)da ch.4B-X-070001			
2.4	100	07/98 → 01/05				FCP1491	LUCAS/TRW	
2.4	115	12/97 → 01/05	FCP1717	ATE	PR 1LB,1LE-1LF,1LT(288-312disc)da ch.4B-X-070001			
2.4	115	12/97 → 01/05				FCP1491	LUCAS/TRW	
2.4	120	12/97 → 01/05	FCP1717	ATE	PR 1LB,1LE-1LF,1LT(288-312disc)da ch.4B-X-070001			

For material availability see page 16-18 / Per la disponibilità materiali vedere a pagina 16-18

...AUDI

...A6 Avant (4B5, C5)

	kW				NOTE			NOTE
2.4	120	12/97 → 01/05				FCP1491	LUCAS/TRW	
2.4	121	12/97 → 01/05	FCP1717	ATE	PR 1LB,1LE-1LF,1LT(288-312disc)da ch.4B-X-070001			
2.4	121	12/97 → 01/05				FCP1491	LUCAS/TRW	
2.4	125	08/01 → 01/05	FCP1717	ATE	PR 1LB,1LE-1LF,1LT(288-312disc)da ch.4B-X-070001			
2.4	125	08/01 → 01/05				FCP1491	LUCAS/TRW	
2.4 30V	100	05/97 → 03/04	FCP1323	ATE				
2.4 30V	100	05/97 → 03/04				FCP541	LUCAS/TRW	
2.4 30V	120	05/97 → 03/04	FCP1323	ATE				
2.4 30V	120	05/97 → 03/04				FCP541	LUCAS/TRW	
2.4 30V	121	05/97 → 03/04	FCP1323	ATE				
2.4 30V	121	05/97 → 03/04				FCP541	LUCAS/TRW	
2.4 quattro	115	08/98 → 05/01	FCP1717	ATE	PR 1LB,1LE-1LF,1LT(288-312disc)da ch.4B-X-070001			
2.4 quattro	115	08/98 → 05/01				FCP1491	LUCAS/TRW	
2.4 quattro	120	12/97 → 01/05	FCP1717	ATE	PR 1LB,1LE-1LF,1LT(288-312disc)da ch.4B-X-070001			
2.4 quattro	120	12/97 → 01/05				FCP1491	LUCAS/TRW	
2.4 quattro	121	12/97 → 01/05	FCP1717	ATE	PR 1LB,1LE-1LF,1LT(288-312disc)da ch.4B-X-070001			
2.4 quattro	121	12/97 → 01/05				FCP1491	LUCAS/TRW	
2.4 quattro	125	08/01 → 01/05	FCP1717	ATE	PR 1LB,1LE-1LF,1LT(288-312disc)da ch.4B-X-070001			
2.4 quattro	125	08/01 → 01/05				FCP1491	LUCAS/TRW	
2.5 TDi	85	04/97 → 03/04	FCP1323	ATE				
2.5 TDI	110	12/97 → 01/05	FCP1717	ATE	PR 1LB,1LE-1LF,1LT(288-312disc)da ch.4B-X-070001			
2.5 TDI	110	12/97 → 01/05				FCP1491	LUCAS/TRW	
2.5 TDI	114	08/01 → 01/05	FCP1717	ATE	PR 1LB,1LE-1LF,1LT(288-312disc)da ch.4B-X-070001			
2.5 TDI	114	08/01 → 01/05				FCP1491	LUCAS/TRW	
2.5 TDI	120	07/02 → 01/05	FCP1717	ATE	PR 1LB,1LE-1LF,1LT(288-312disc)da ch.4B-X-070001			
2.5 TDI	120	07/02 → 01/05				FCP1491	LUCAS/TRW	
2.5 TDI	132	02/00 → 01/05	FCP1717	ATE	PR 1LB,1LE-1LF,1LT(288-312disc)da ch.4B-X-070001			
2.5 TDI	132	02/00 → 01/05				FCP1491	LUCAS/TRW	
2.5 TDi	85	12/97 → 04/04	FCP1323	ATE				
2.5 TDI quattro	110	12/97 → 01/05	FCP1717	ATE	PR 1LB,1LE-1LF,1LT(288-312disc)da ch.4B-X-070001			
2.5 TDI quattro	110	12/97 → 01/05				FCP1491	LUCAS/TRW	
2.5 TDI quattro	132	02/00 → 01/05	FCP1717	ATE	PR 1LB,1LE-1LF,1LT(288-312disc)da ch.4B-X-070001			
2.5 TDI quattro	132	02/00 → 01/05				FCP1491	LUCAS/TRW	
2.8	132	12/97 → 05/00	FCP1717	ATE	PR 1LB,1LE-1LF,1LT(288-312disc)da ch.4B-X-070001			
2.8	132	12/97 → 05/00				FCP1491	LUCAS/TRW	
2.8	140	07/99 → 01/05	FCP1717	ATE	PR 1LB,1LE-1LF,1LT(288-312disc)da ch.4B-X-070001			
2.8	140	07/99 → 01/05				FCP1491	LUCAS/TRW	
2.8	142	12/97 → 01/05	FCP1717	ATE	PR 1LB,1LE-1LF,1LT(288-312disc)da ch.4B-X-070001			
2.8	142	12/97 → 01/05				FCP1491	LUCAS/TRW	
2.8 i	142	03/97 → 03/04	FCP1323	ATE				
2.8 quattro	142	12/97 → 01/05	FCP1717	ATE	PR 1LB,1LE-1LF,1LT(288-312disc)da ch.4B-X-070001			
2.8 quattro	142	12/97 → 01/05				FCP1491	LUCAS/TRW	
3.0	162	08/01 → 01/05	FCP1717	ATE	PR 1LB,1LE-1LF,1LT(288-312disc)da ch.4B-X-070001			
3.0	162	08/01 → 01/05				FCP1491	LUCAS/TRW	
3.0 quattro	162	08/01 → 01/05	FCP1717	ATE	PR 1LB,1LE-1LF,1LT(288-312disc)da ch.4B-X-070001			
3.0 quattro	162	08/01 → 01/05				FCP1491	LUCAS/TRW	
RS6 plus quattro	353	04/04 → 01/05	FCP1664	BREMBO				
RS6 plus quattro	353	04/04 → 01/05				FCP1655	LUCAS/TRW	
RS6 quattro	331	07/02 → 01/05	FCP1664	BREMBO				
RS6 quattro	331	07/02 → 01/05				FCP1655	LUCAS/TRW	

A6 Avant (4F5, C6)

2.0 TDI	100	06/05 → 08/11	FCP1717	ATE	PR1LT(314mm disc)			
2.0 TDI	100	06/05 → 08/11				FCP1636	LUCAS/TRW	
2.0 TDI	100	06/05 → 08/11				FCP1655	LUCAS/TRW	
2.0 TDI	103	06/05 → 10/08	FCP1717	ATE	PR1LT(314mm disc)			
2.0 TDI	103	06/05 → 10/08				FCP1636	LUCAS/TRW	
2.0 TDI	103	06/05 → 10/08				FCP1655	LUCAS/TRW	
2.0 TDI	120	04/09 → 08/11	FCP1717	ATE	PR1LT(314mm disc)			
2.0 TDI	120	04/09 → 08/11				FCP1636	LUCAS/TRW	
2.0 TDI	120	04/09 → 08/11				FCP1655	LUCAS/TRW	
2.0 TDI	125	10/08 → 08/11	FCP1717	ATE	PR1LT(314mm disc)			
2.0 TDI	125	10/08 → 08/11				FCP1636	LUCAS/TRW	
2.0 TDI	125	10/08 → 08/11				FCP1655	LUCAS/TRW	
2.0 TDI	89	09/05 → 06/06	FCP1717	ATE	PR1LT(314mm disc)			
2.0 TDI	89	09/05 → 06/06				FCP1636	LUCAS/TRW	
2.0 TDI	89	09/05 → 06/06				FCP1655	LUCAS/TRW	
2.0 TFSI	125	06/05 → 08/11	FCP1717	ATE	PR1LT(314mm disc)			
2.0 TFSI	125	06/05 → 08/11				FCP1636	LUCAS/TRW	
2.0 TFSI	125	06/05 → 08/11				FCP1655	LUCAS/TRW	
2.4	130	03/05 → 10/08	FCP1717	ATE	PR1LT(314mm disc)			
2.4	130	03/05 → 10/08				FCP1636	LUCAS/TRW	
2.4	130	03/05 → 10/08				FCP1655	LUCAS/TRW	
2.4 quattro	130	03/05 → 10/08	FCP1717	ATE	PR1LT(314mm disc)			
2.4 quattro	130	03/05 → 10/08				FCP1636	LUCAS/TRW	
2.4 quattro	130	03/05 → 10/08				FCP1655	LUCAS/TRW	
2.7 TDI	120	03/05 → 08/11	FCP1717	ATE	PR1LT(314mm disc)			

For material availability see page 16-18 / Per la disponibilità materiali vedere a pagina 16-18

...AUDI

...A6 Avant (4F5, C6)

	kW					NOTE			NOTE
2.7 TDI	120	03/05 → 08/11					FCP1636	LUCAS/TRW	
2.7 TDI	120	03/05 → 08/11					FCP1655	LUCAS/TRW	
2.7 TDI	132	03/05 → 10/08	FCP1717	ATE	PR1LT(314mm disc)				
2.7 TDI	132	03/05 → 10/08					FCP1636	LUCAS/TRW	
2.7 TDI	132	03/05 → 10/08					FCP1655	LUCAS/TRW	
2.7 TDI	140	10/08 → 08/11	FCP1717	ATE	PR1LT(314mm disc)				
2.7 TDI	140	10/08 → 08/11					FCP1636	LUCAS/TRW	
2.7 TDI	140	10/08 → 08/11					FCP1655	LUCAS/TRW	
2.7 TDI quattro	120	06/05 → 08/11	FCP1717	ATE	PR1LT(314mm disc)				
2.7 TDI quattro	120	06/05 → 08/11					FCP1636	LUCAS/TRW	
2.7 TDI quattro	120	06/05 → 08/11					FCP1655	LUCAS/TRW	
2.7 TDI quattro	132	03/05 → 10/08	FCP1717	ATE	PR1LT(314mm disc)				
2.7 TDI quattro	132	03/05 → 10/08					FCP1636	LUCAS/TRW	
2.7 TDI quattro	132	03/05 → 10/08					FCP1655	LUCAS/TRW	
2.7 TDI quattro	140	10/08 → 08/11	FCP1717	ATE	PR1LT(314mm disc)				
2.7 TDI quattro	140	10/08 → 08/11					FCP1636	LUCAS/TRW	
2.7 TDI quattro	140	10/08 → 08/11					FCP1655	LUCAS/TRW	
2.8 FSI	140	10/08 → 08/11	FCP1717	ATE	PR1LT(314mm disc)				
2.8 FSI	140	10/08 → 08/11					FCP1636	LUCAS/TRW	
2.8 FSI	140	10/08 → 08/11					FCP1655	LUCAS/TRW	
2.8 FSI	154	11/06 → 10/08	FCP1717	ATE	PR1LT(314mm disc)				
2.8 FSI	154	11/06 → 10/08					FCP1636	LUCAS/TRW	
2.8 FSI	154	11/06 → 10/08					FCP1655	LUCAS/TRW	
2.8 FSI	162	10/08 → 08/11	FCP1717	ATE	PR1LT(314mm disc)				
2.8 FSI	162	10/08 → 08/11					FCP1636	LUCAS/TRW	
2.8 FSI	162	10/08 → 08/11					FCP1655	LUCAS/TRW	
2.8 FSI quattro	140	10/08 → 08/11	FCP1717	ATE	PR1LT(314mm disc)				
2.8 FSI quattro	140	10/08 → 08/11					FCP1636	LUCAS/TRW	
2.8 FSI quattro	140	10/08 → 08/11					FCP1655	LUCAS/TRW	
2.8 FSI quattro	154	06/07 → 10/08	FCP1717	ATE	PR1LT(314mm disc)				
2.8 FSI quattro	154	06/07 → 10/08					FCP1636	LUCAS/TRW	
2.8 FSI quattro	154	06/07 → 10/08					FCP1655	LUCAS/TRW	
2.8 FSI quattro	162	10/08 → 08/11	FCP1717	ATE	PR1LT(314mm disc)				
2.8 FSI quattro	162	10/08 → 08/11					FCP1636	LUCAS/TRW	
2.8 FSI quattro	162	10/08 → 08/11					FCP1655	LUCAS/TRW	
3.0	160	03/05 → 05/06	FCP1717	ATE	PR1LT(314mm disc)				
3.0	160	03/05 → 05/06					FCP1636	LUCAS/TRW	
3.0	160	03/05 → 05/06					FCP1655	LUCAS/TRW	
3.0 quattro	160	03/05 → 05/06	FCP1717	ATE	PR1LT(314mm disc)				
3.0 quattro	160	03/05 → 05/06					FCP1636	LUCAS/TRW	
3.0 quattro	160	03/05 → 05/06					FCP1655	LUCAS/TRW	
3.0 TDi	171	06/06 → 08/11	FCP1717	ATE	PR1LT(314mm disc)				
3.0 TDi	171	06/06 → 08/11					FCP1636	LUCAS/TRW	
3.0 TDi	171	06/06 → 08/11					FCP1655	LUCAS/TRW	
3.0 TDI quattro	155	03/05 → 08/11	FCP1717	ATE	PR1LT(314mm disc)				
3.0 TDI quattro	155	03/05 → 08/11					FCP1636	LUCAS/TRW	
3.0 TDI quattro	155	03/05 → 08/11					FCP1655	LUCAS/TRW	
3.0 TDI quattro	165	03/05 → 05/06	FCP1629	ATE	PR 1LD/1LG 1LH/1ZL				
3.0 TDI quattro	165	03/05 → 05/06	FCP1717	ATE	PR1LB,1LE(288mm disc)1LT,1LF(312mm disc)				
3.0 TDI quattro	165	03/05 → 05/06					FCP1636	LUCAS/TRW	
3.0 TDI quattro	165	03/05 → 05/06					FCP1655	LUCAS/TRW	PR 1KW/2EE
3.0 TDI quattro	171	06/06 → 10/08	FCP1717	ATE	PR1LT(314mm disc)				
3.0 TDI quattro	171	06/06 → 10/08					FCP1636	LUCAS/TRW	
3.0 TDI quattro	171	06/06 → 10/08					FCP1655	LUCAS/TRW	
3.0 TDI quattro	176	10/08 → 08/11	FCP1717	ATE	PR1LT(314mm disc)				
3.0 TDI quattro	176	10/08 → 08/11					FCP1636	LUCAS/TRW	
3.0 TDI quattro	176	10/08 → 08/11					FCP1655	LUCAS/TRW	
3.0 TFSI quattro	213	10/08 → 08/11	FCP1717	ATE	PR1LT(314mm disc)				
3.0 TFSI quattro	213	10/08 → 08/11					FCP1636	LUCAS/TRW	
3.0 TFSI quattro	213	10/08 → 08/11					FCP1655	LUCAS/TRW	
3.2 FSI	188	03/05 → 10/08	FCP1717	ATE	PR1LT(314mm disc)				
3.2 FSI	188	03/05 → 10/08					FCP1636	LUCAS/TRW	
3.2 FSI	188	03/05 → 10/08					FCP1655	LUCAS/TRW	
3.2 FSI quattro	188	03/05 → 10/08	FCP1717	ATE	PR1LT(314mm disc)				
3.2 FSI quattro	188	03/05 → 10/08					FCP1636	LUCAS/TRW	
3.2 FSI quattro	188	03/05 → 10/08					FCP1655	LUCAS/TRW	
4.2 FSI quattro	257	06/06 → 08/11	FCP1629	ATE	PR 1LD,1LG,1LH,1ZL				
4.2 FSI quattro	257	06/06 → 08/11	FCP1717	ATE	PR1LT(314mm disc)				
4.2 FSI quattro	257	06/06 → 08/11					FCP1636	LUCAS/TRW	
4.2 FSI quattro	257	06/06 → 08/11					FCP1655	LUCAS/TRW	PR 1KW/2EE
4.2 quattro	246	03/05 → 05/06	FCP1629	ATE	PR 1LD,1LG,1LH,1ZL				
4.2 quattro	246	03/05 → 05/06	FCP1717	ATE	PR1LT(314mm disc)				
4.2 quattro	246	03/05 → 05/06					FCP1636	LUCAS/TRW	
4.2 quattro	246	03/05 → 05/06					FCP1655	LUCAS/TRW	PR 1KW/2EE
RS6 quattro	426	04/08 → 08/10	FRP3133	BREMBO	NOT FOR CERAMIC DISCS				
RS6 quattro	426	04/08 → 08/10					FCP1655	LUCAS/TRW	PR 1KJ
S6 quattro	320	06/06 → 08/11					FCP1655	LUCAS/TRW	PR 1KW/2EE/2EL

For material availability see page 16-18 / Per la disponibilità materiali vedere a pagina 16-18

FERODO RACING
Updated on November 2020

...AUDI	kW				NOTE			NOTE
A6 Avant (4G5, C7, 4GD)								
2.0 TDI	100	01/12 →	FCP4466	BREMBO	NOT FOR CERAMIC DISCS,Disc Diam 400,PR 1LW			
2.0 TDI	120	05/11 →	FCP4466	BREMBO	NOT FOR CERAMIC DISCS,Disc Diam 400,PR 1LW			
2.0 TDI	130	05/11 →	FCP4466	BREMBO	NOT FOR CERAMIC DISCS,Disc Diam 400,PR 1LW			
2.0 TDI	140	11/13 →	FCP4466	BREMBO	NOT FOR CERAMIC DISCS,Disc Diam 400,PR 1LW			
2.0 TFSI	132	06/11 →	FCP4466	BREMBO	NOT FOR CERAMIC DISCS,Disc Diam 400,PR 1LW			
2.8 FSI	150	05/11 →	FCP4466	BREMBO	NOT FOR CERAMIC DISCS,Disc Diam 400,PR 1LW			
2.8 FSI quattro	150	05/11 →	FCP4466	BREMBO	NOT FOR CERAMIC DISCS,Disc Diam 400,PR 1LW			
3.0 TDI	150	05/11 →	FCP4466	BREMBO	NOT FOR CERAMIC DISCS,Disc Diam 400,PR 1LW			
3.0 TDI quattro	150	05/11 →	FCP4466	BREMBO	NOT FOR CERAMIC DISCS,Disc Diam 400,PR 1LW			
3.0 TDI quattro	180	05/11 →	FCP4466	BREMBO	NOT FOR CERAMIC DISCS,Disc Diam 400,PR 1LW			
3.0 TDI quattro	230	11/11 →	FCP4466	BREMBO	NOT FOR CERAMIC DISCS,Disc Diam 400,PR 1LW			
3.0 TFSI quattro	220	05/11 → 05/12	FCP4466	BREMBO	NOT FOR CERAMIC DISCS,Disc Diam 400,PR 1LW			
3.0 TFSI quattro	228	11/11 →	FCP4466	BREMBO	NOT FOR CERAMIC DISCS,Disc Diam 400,PR 1LW			
RS6 performance quattro	445	11/15 →	FCP4711	BREMBO				
RS6 performance quattro	445	11/15 →				FCP4050	LUCAS/TRW	
RS6 quattro	412	01/13 →	FCP4711	BREMBO				
RS6 quattro	412	01/13 →				FCP4050	LUCAS/TRW	
S6 quattro	309	02/12 →	FCP4468	BREMBO	NOT FOR CERAMIC DISCS,Disc Diam 400,PR 1LU			
S6 quattro	309	02/12 →	FCP4466	BREMBO	NOT FOR CERAMIC DISCS,Disc Diam 400,PR 1LW			
S6 quattro	331	10/14 →	FCP4468	BREMBO	NOT FOR CERAMIC DISCS,Disc Diam 400,PR 1LU			
A7 Sportback (4GA, 4GF)								
2.8 FSI	150	02/11 →	FCP4466	BREMBO	NOT FOR CERAMIC DISCS,Disc Diam 400,PR 1LW			
2.8 FSI quattro	150	10/10 →	FCP4466	BREMBO	NOT FOR CERAMIC DISCS,Disc Diam 400,PR 1LW			
3.0 TDI	150	11/10 →	FCP4466	BREMBO	NOT FOR CERAMIC DISCS,Disc Diam 400,PR 1LW			
3.0 TDI	160	07/14 →	FCP4466	BREMBO	NOT FOR CERAMIC DISCS,Disc Diam 400,PR 1LW			
3.0 TDI quattro	150	12/10 →	FCP4466	BREMBO	NOT FOR CERAMIC DISCS,Disc Diam 400,PR 1LW			
3.0 TDI quattro	155	07/14 →	FCP4466	BREMBO	NOT FOR USE WITH CERAMIC DISCS ,For PR code:1LW			
3.0 TDI quattro	160	07/14 →	FCP4466	BREMBO	NOT FOR USE WITH CERAMIC DISCS ,For PR code:1LW			
3.0 TDI quattro	176	05/13 →	FCP4466	BREMBO	NOT FOR USE WITH CERAMIC DISCS ,For PR code:1LW			
3.0 TDI quattro	180	10/10 →	FCP4466	BREMBO	NOT FOR CERAMIC DISCS,Disc Diam 400,PR 1LW			
3.0 TDI quattro	200	05/14 →	FCP4466	BREMBO	NOT FOR USE WITH CERAMIC DISCS ,For PR code:1LW			
3.0 TDI quattro	230	11/11 →	FCP4466	BREMBO	NOT FOR CERAMIC DISCS,Disc Diam 400,PR 1LW			
3.0 TDI quattro	235	05/14 →	FCP4466	BREMBO	NOT FOR USE WITH CERAMIC DISCS ,For PR code:1LW			
3.0 TDI quattro	240	09/14 →	FCP4466	BREMBO	NOT FOR USE WITH CERAMIC DISCS ,For PR code:1LW			
3.0 TFSI quattro	220	10/10 →	FCP4466	BREMBO	NOT FOR CERAMIC DISCS,Disc Diam 400,PR 1LW			
3.0 TFSI quattro	228	01/11 →	FCP4466	BREMBO	NOT FOR CERAMIC DISCS,Disc Diam 400,PR 1LW			
3.0 TFSI quattro	245	05/14 →	FCP4466	BREMBO	NOT FOR USE WITH CERAMIC DISCS ,For PR code:1LW			
RS7 performance quattro	445	11/15 →				FCP4050	LUCAS/TRW	
RS7 quattro	412	10/13 →	FCP4466	BREMBO	NOT FOR CERAMIC DISCS,PR 1LN			
RS7 quattro	412	10/13 →				FCP4050	LUCAS/TRW	
S7 quattro	309	02/12 →	FCP4468	BREMBO	NOT FOR USE WITH CERAMIC DISCS ,For PR code:1LU			
S7 quattro	309	02/12 →	FCP4466	BREMBO	NOT FOR CERAMIC DISCS,Disc Diam 400,PR 1LW			
S7 quattro	331	07/14 →	FCP4468	BREMBO	NOT FOR USE WITH CERAMIC DISCS ,For PR code:1LU			
S7 quattro	331	07/14 →	FCP4466	BREMBO	NOT FOR USE WITH CERAMIC DISCS ,For PR code:1LW			
A8								
2.5 TDi	110	06/94 → 03/96	FCP590	ATE				
2.5 TDi	110	06/94 → 03/96				FCP541	LUCAS/TRW	
2.5 TDi	110	06/94 → 03/96				FCP596	LUCAS/TRW	
2.5 TDi	132	06/00 → 10/02	FCP891	ATE				
2.5 TDi 24V	110	04/96 → 05/00	FCP590	ATE				
2.5 TDi 24V	110	04/96 → 05/00				FCP541	LUCAS/TRW	
2.5 TDi 24V	110	04/96 → 05/00				FCP596	LUCAS/TRW	
2.8	128	06/94 → 03/96	FCP590	ATE				
2.8	128	06/94 → 03/96				FCP541	LUCAS/TRW	
2.8	128	06/94 → 03/96				FCP596	LUCAS/TRW	
3.3 TDi 32V	165	06/00 → 10/02	FCP891	ATE				
3.3 TDi 32V	165	08/00 → 10/02	FCP891	ATE				
3.7 32V	169	09/94 → 07/96	FCP590	ATE				
3.7 32V	169	09/94 → 07/96				FCP541	LUCAS/TRW	
3.7 32V	169	09/94 → 07/96				FCP596	LUCAS/TRW	
3.7 32V	169	08/96 → 10/98	FCP590	ATE				
3.7 32V	169	08/96 → 10/98				FCP541	LUCAS/TRW	
3.7 32V	169	08/96 → 10/98				FCP596	LUCAS/TRW	
3.7 40V	191	11/98 → 10/02	FCP891	ATE				
3.7 40V	191	11/98 → 10/02				FCP541	LUCAS/TRW	
A8 (4D2, 4D8)								
2.5 TDi 24v quattro	132	11/99 → 09/02	FCP1001	ATE				
2.5 TDi 24v quattro	132	11/99 → 09/02				FCP1491	LUCAS/TRW	
2.5 TDi 32V quattro	132	06/00 →	FCP891	ATE				
2.5 TDi V6 quattro	103	01/97 → 05/00	FCP590	ATE				
2.5 TDi V6 quattro	103	01/97 → 05/00				FCP541	LUCAS/TRW	
2.8 30v quattro	142	11/98 → 09/02	FCP1001	ATE	PR 1LJ, From Ch. 4DX005501			
2.8 30v quattro	142	11/98 → 09/02				FCP1491	LUCAS/TRW	
2.8 30V quattro	142	04/96 → 10/02	FCP590	ATE				

For material availability see page 16-18 / Per la disponibilità materiali vedere a pagina 16-18

...AUDI

	kW				NOTE			NOTE
...A8 (4D2, 4D8)								
2.8 30V quattro	142	04/96 → 10/02				FCP541	LUCAS/TRW	
2.8 30V quattro	142	04/96 → 10/02				FCP596	LUCAS/TRW	
2.8 quattro	128	03/94 → 03/96	FCP590	ATE				
2.8 quattro	128	03/94 → 03/96				FCP541	LUCAS/TRW	
2.8 quattro	128	03/94 → 03/96				FCP596	LUCAS/TRW	
3.3 TDi 32v quattro	165	12/99 → 09/02	FCP1001	ATE				
3.3 TDi 32v quattro	165	12/99 → 09/02				FCP1491	LUCAS/TRW	
3.7 32V quattro	169	07/95 → 10/98	FCP590	ATE				
3.7 32V quattro	169	07/95 → 10/98				FCP541	LUCAS/TRW	
3.7 32V quattro	169	07/95 → 10/98				FCP596	LUCAS/TRW	
3.7 40v	191	10/98 → 09/02	FCP1001	ATE	PR 1LJ			
3.7 40v	191	10/98 → 09/02				FCP1491	LUCAS/TRW	
3.7 40v quattro	191	01/99 → 09/02	FCP1001	ATE	PR 1LJ, From Ch. 4DX005501			
3.7 40v quattro	191	01/99 → 09/02				FCP1491	LUCAS/TRW	
3.7 40V quattro	191	11/98 → 10/02	FCP891	ATE				
3.7 40V quattro	191	11/98 → 10/02				FCP541	LUCAS/TRW	
4.2 40v quattro	175	02/99 → 04/00	FCP1001	ATE	PR 1LJ			
4.2 40v quattro	175	02/99 → 04/00				FCP1491	LUCAS/TRW	
4.2 40v quattro	228	10/98 → 09/02	FCP1001	ATE	PR 1LJ			
4.2 40v quattro	228	10/98 → 09/02				FCP1491	LUCAS/TRW	
4.2 V8 32V quattro	180	03/94 → 07/96	FCP590	ATE				
4.2 V8 32V quattro	180	03/94 → 07/96				FCP541	LUCAS/TRW	
4.2 V8 32V quattro	180	04/96 → 10/98	FCP590	ATE				
4.2 V8 32V quattro	180	04/96 → 10/98				FCP541	LUCAS/TRW	
4.2 V8 32V quattro	180	04/96 → 10/98				FCP596	LUCAS/TRW	
4.2 V8 40V quattro		10/98 → 10/02	FCP891	ATE				
6.0 48v quattro	309	03/01 → 09/02	FCP1001	ATE	PR 1LJ			
6.0 48v quattro	309	03/01 → 09/02				FCP1491	LUCAS/TRW	
A8 (4E_)								
2.8 FSI	154	08/07 → 07/10	FCP1629	ATE	PR 1LG			
2.8 FSI	154	08/07 → 07/10	FCP4467	BREMBO	NOT FOR CERAMIC DISCS			
2.8 FSI	154	08/07 → 07/10				FCP1655	LUCAS/TRW	PR 1KE/1KW/1KY/1KZ/1KU
3.0	160	07/03 → 05/06	FCP1629	ATE	PR 1LG			
3.0	160	07/03 → 05/06	FCP4467	BREMBO	NOT FOR CERAMIC DISCS			
3.0	160	07/03 → 05/06				FCP1655	LUCAS/TRW	PR 1KE/1KW/1KY/1KZ/1KU
3.0	162	07/03 → 05/05	FCP1629	ATE	PR 1LG			
3.0	162	07/03 → 05/05	FCP4467	BREMBO	NOT FOR CERAMIC DISCS			
3.0	162	07/03 → 05/05				FCP1655	LUCAS/TRW	PR 1KE/1KW/1KY/1KZ/1KU
3.0 TDI quattro	155	11/03 → 07/10	FCP1629	ATE	PR 1LG			
3.0 TDI quattro	155	11/03 → 07/10	FCP4467	BREMBO	NOT FOR CERAMIC DISCS			
3.0 TDI quattro	155	11/03 → 07/10				FCP1655	LUCAS/TRW	PR 1KE/1KW/1KY/1KZ/1KU
3.0 TDI quattro	171	08/03 → 07/10	FCP1629	ATE	PR 1LG			
3.0 TDI quattro	171	08/03 → 07/10	FCP4467	BREMBO	NOT FOR CERAMIC DISCS			
3.0 TDI quattro	171	08/03 → 07/10				FCP1655	LUCAS/TRW	PR 1KE/1KW/1KY/1KZ/1KU
3.2 FSI	191	06/05 → 07/10	FCP4467	BREMBO	NOT FOR CERAMIC DISCS			
3.2 FSI	191	06/05 → 07/10				FCP1655	LUCAS/TRW	PR 1KE/1KW/1KY/1KZ/1KU
3.2 FSI quattro	191	06/05 → 07/10	FCP1629	ATE	PR 1LG			
3.2 FSI quattro	191	06/05 → 07/10	FCP4467	BREMBO	NOT FOR CERAMIC DISCS			
3.2 FSI quattro	191	06/05 → 07/10				FCP1655	LUCAS/TRW	PR 1KE/1KW/1KY/1KZ/1KU
3.7 quattro	206	10/02 → 05/06	FCP1629	ATE	PR 1LG			
3.7 quattro	206	10/02 → 05/06	FCP4467	BREMBO	NOT FOR CERAMIC DISCS			
3.7 quattro	206	10/02 → 05/06				FCP1655	LUCAS/TRW	PR 1KE/1KW/1KY/1KZ/1KU
4.0 TDI quattro	202	05/03 → 07/05	FCP1629	ATE	PR 1LG			
4.0 TDI quattro	202	05/03 → 07/05	FCP4467	BREMBO	NOT FOR CERAMIC DISCS			
4.0 TDI quattro	202	05/03 → 07/05				FCP1655	LUCAS/TRW	PR 1KE/1KW/1KY/1KZ/1KU
4.2 FSI quattro	257	06/06 → 07/10	FCP1629	ATE	PR 1LG			
4.2 FSI quattro	257	06/06 → 07/10	FCP4467	BREMBO	NOT FOR CERAMIC DISCS			
4.2 FSI quattro	257	06/06 → 07/10				FCP1655	LUCAS/TRW	PR 1KE/1KW/1KY/1KZ/1KU
4.2 quattro	246	10/02 → 07/10	FCP1629	ATE	PR 1LG			
4.2 quattro	246	10/02 → 07/10	FCP4467	BREMBO	NOT FOR CERAMIC DISCS			
4.2 quattro	246	10/02 → 07/10				FCP1655	LUCAS/TRW	PR 1KE/1KW/1KY/1KZ/1KU
4.2 TDI quattro	235	01/05 → 06/05	FCP1629	ATE	PR 1LG			
4.2 TDI quattro	235	01/05 → 06/05	FCP4467	BREMBO	NOT FOR CERAMIC DISCS			
4.2 TDI quattro	235	01/05 → 06/05				FCP1655	LUCAS/TRW	PR 1KE/1KW/1KY/1KZ/1KU
4.2 TDI quattro	240	07/05 → 07/10	FCP1629	ATE	PR 1LG			
4.2 TDI quattro	240	07/05 → 07/10	FCP4467	BREMBO	NOT FOR CERAMIC DISCS			
4.2 TDI quattro	240	07/05 → 07/10				FCP1655	LUCAS/TRW	PR 1KE/1KW/1KY/1KZ/1KU
6.0 W12 quattro	331	12/03 → 07/10	FCP1629	ATE	PR 1LG			
6.0 W12 quattro	331	12/03 → 07/10	FCP4467	BREMBO	NOT FOR CERAMIC DISCS			
6.0 W12 quattro	331	12/03 → 07/10				FCP1655	LUCAS/TRW	PR 1KE/1KW/1KY/1KZ/1KU
S8 quattro	331	06/06 → 07/10	FCP4467	BREMBO	NOT FOR CERAMIC DISCS			
S8 quattro	331	06/06 → 07/10				FCP1655	LUCAS/TRW	

For material availability see page 16-18 / Per la disponibilità materiali vedere a pagina 16-18

FERODO RACING
Updated on November 2020



kW

...AUDI

A8 (4H_)

					NOTE			NOTE
2.0 TFSI hybrid	155	02/12 →	**FCP4468**	BREMBO	NOT FOR CERAMIC DISCS & armoured vehicle,PR 1LN			
2.0 TFSI hybrid	155	02/12 →	**FCP4466**	BREMBO	NOT FOR CERAMIC&Armoured,Disc 400mm,PR 1LW			
3.0 TDI	150	09/11 →	**FCP4468**	BREMBO	NOT FOR CERAMIC DISCS & armoured vehicle,PR 1LN			
3.0 TDI	150	09/11 →	**FCP4466**	BREMBO	NOT FOR CERAMIC&Armoured,Disc 400mm,PR 1LW			
3.0 TDI quattro	155	08/10 →	**FCP4468**	BREMBO	NOT FOR CERAMIC DISCS & armoured vehicle,PR 1LN			
3.0 TDI quattro	155	08/10 →	**FCP4466**	BREMBO	NOT FOR CERAMIC&Armoured,Disc 400mm,PR 1LW			
3.0 TDI quattro	176	11/12 →	**FCP4466**	BREMBO	NOT FOR CERAMIC DISCS			
3.0 TDI quattro	184	07/10 →	**FCP4468**	BREMBO	NOT FOR CERAMIC DISCS & armoured vehicle,PR 1LN			
3.0 TDI quattro	184	07/10 →	**FCP4466**	BREMBO	NOT FOR CERAMIC&Armoured,Disc 400mm,PR 1LW			
3.0 TDI quattro	190	10/13 →	**FCP4466**	BREMBO	NOT FOR CERAMIC DISCS,Disc Diam 400,PR 1LW			
3.0 TDI quattro	193	05/15 →	**FCP4468**	BREMBO	NOT FOR CERAMIC DISCS,PR 1LN/1LX			
3.0 TFSI quattro	213	07/10 →	**FCP4468**	BREMBO	NOT FOR CERAMIC DISCS & armoured vehicle,PR 1LN			
3.0 TFSI quattro	213	07/10 →	**FCP4466**	BREMBO	NOT FOR CERAMIC&Armoured,Disc 400mm,PR 1LW			
3.0 TFSI quattro	228	11/11 →	**FCP4468**	BREMBO	NOT FOR CERAMIC DISCS & armoured vehicle,PR 1LN			
3.0 TFSI quattro	228	11/11 →	**FCP4466**	BREMBO	NOT FOR CERAMIC&Armoured,Disc 400mm,PR 1LW			
3.0 TFSI quattro	245	06/10 →	**FCP4468**	BREMBO	NOT FOR CERAMIC DISCS & armoured vehicle,PR 1LN			
3.0 TFSI quattro	245	06/10 →	**FCP4466**	BREMBO	NOT FOR CERAMIC&Armoured,Disc 400mm,PR 1LW			
4.0 TFSI quattro	309	03/12 →	**FCP4468**	BREMBO	NOT FOR CERAMIC DISCS & armoured vehicle,PR 1LN			
4.0 TFSI quattro	309	03/12 →	**FCP4466**	BREMBO	NOT FOR CERAMIC&Armoured,Disc 400mm,PR 1LW			
4.0 TFSI quattro	320	10/13 →	**FCP4466**	BREMBO	NOT FOR CERAMIC DISCS,Disc Diam 400,PR 1LW			
4.2 FSI quattro	273	11/09 →	**FCP4468**	BREMBO	NOT FOR CERAMIC DISCS & armoured vehicle,PR 1LN			
4.2 FSI quattro	273	11/09 →	**FCP4466**	BREMBO	NOT FOR CERAMIC&Armoured,Disc 400mm,PR 1LW			
4.2 TDI quattro	258	11/09 →	**FCP4468**	BREMBO	NOT FOR CERAMIC DISCS & armoured vehicle,PR 1LN			
4.2 TDI quattro	258	11/09 →	**FCP4466**	BREMBO	NOT FOR CERAMIC&Armoured,Disc 400mm,PR 1LW			
4.2 TDI quattro	283	10/13 →	**FCP4466**	BREMBO	NOT FOR CERAMIC DISCS,Disc Diam 400,PR 1LW			
6.3 W12 quattro	368	01/11 →	**FCP4468**	BREMBO	NOT FOR CERAMIC DISCS & armoured vehicle,PR 1LN			
6.3 W12 quattro	368	01/11 →	**FCP4466**	BREMBO	NOT FOR CERAMIC&Armoured,Disc 400mm,PR 1LW			
S8 quattro	382	04/12 →	**FCP4468**	BREMBO	NOT FOR CERAMIC DISCS & armoured vehicle,PR 1LN			
S8 quattro	382	04/12 →	**FCP4466**	BREMBO	NOT FOR CERAMIC DISCS			

Cabrio

1.6		01/91 → 07/98	**FCP775**	LUCAS/TRW				
1.6		01/91 → 07/98				**FCP596**	LUCAS/TRW	
1.8 20V	92	01/91 → 03/97	**FCP775**	LUCAS/TRW				
1.8 20V	92	01/91 → 03/97				**FCP596**	LUCAS/TRW	
1.8 20V	92	04/97 → 07/98	**FCP774**	LUCAS/TRW				
1.8 20V	92	04/97 → 07/98				**FCP596**	LUCAS/TRW	
1.9 TDi	66	01/95 → 07/98	**FCP775**	LUCAS/TRW				
1.9 TDi	66	01/95 → 07/98				**FCP596**	LUCAS/TRW	
2.0 16V	85, 103	01/91 → 07/98	**FCP775**	LUCAS/TRW				
2.0 16V	85, 103	01/91 → 07/98				**FCP596**	LUCAS/TRW	
2.3 E	98	01/91 → 07/98	**FCP775**	LUCAS/TRW				
2.3 E	98	01/91 → 07/98				**FCP596**	LUCAS/TRW	
2.6	110	01/93 → 07/98	**FCP775**	LUCAS/TRW				
2.6	110	01/93 → 07/98				**FCP596**	LUCAS/TRW	

Coupe

1.6	55	01/80 → 07/84	**FCP370**	LUCAS/TRW				
1.8	64, 82	01/87 → 07/89	**FCP774**	LUCAS/TRW				
1.8	64, 82	01/87 → 07/89				**FCP596**	LUCAS/TRW	
1.8	64	01/80 → 08/85	**FCP370**	LUCAS/TRW				
1.8	64	09/85 → 12/86	**FCP774**	LUCAS/TRW				
1.8	64	09/85 → 12/86				**FCP596**	LUCAS/TRW	
1.8	66	01/80 → 08/85	**FCP370**	LUCAS/TRW				
1.8	66	09/85 → 12/86	**FCP774**	LUCAS/TRW				
1.8	66	09/85 → 12/86				**FCP596**	LUCAS/TRW	
1.8	68	01/80 → 08/85	**FCP370**	LUCAS/TRW				
1.8	68	09/85 → 12/86	**FCP774**	LUCAS/TRW				
1.8	68	09/85 → 12/86				**FCP596**	LUCAS/TRW	
1.9	85	01/80 → 08/85	**FCP370**	LUCAS/TRW				
1.9 10V	85	09/85 → 12/88	**FCP774**	LUCAS/TRW				
1.9 10V	85	09/85 → 12/88				**FCP596**	LUCAS/TRW	
2.0	85	01/80 → 08/85	**FCP370**	LUCAS/TRW				
2.0	85	09/85 → 08/89	**FCP774**	LUCAS/TRW				
2.0	85	09/85 → 08/89				**FCP596**	LUCAS/TRW	
2.0	85	09/89 → 07/92	**FCP775**	LUCAS/TRW				
2.0	85	09/89 → 07/92				**FCP596**	LUCAS/TRW	
2.0	85	08/92 → 12/96	**FCP776**	AKEBONO				
2.0	85	08/92 → 12/96				**FCP596**	LUCAS/TRW	
2.2 10V	85, 100	01/86 → 08/89	**FCP774**	LUCAS/TRW				
2.2 10V	85, 100	01/86 → 08/89				**FCP596**	LUCAS/TRW	
2.2 i	77, 85	02/81 → 12/85	**FCP370**	LUCAS/TRW				
2.2 i	77, 85	02/81 → 12/85				**FCP596**	LUCAS/TRW	
2.2 i	96	02/81 → 12/85	**FCP370**	LUCAS/TRW				
2.2 i	96	02/81 → 12/85				**FCP596**	LUCAS/TRW	
2.2 S2 (Turbo) 20V	162, 169	10/90 → 12/96	**FCP590**	ATE				
2.2 S2 (Turbo) 20V	162, 169	10/90 → 12/96				**FCP596**	LUCAS/TRW	

For material availability see page 16-18 / Per la disponibilità materiali vedere a pagina 16-18

...AUDI	kW				NOTE			NOTE
...Coupe								
2.3	100	02/87 → 12/89	FCP775	LUCAS/TRW				
2.3	100	02/87 → 12/89				FCP596	LUCAS/TRW	
2.3 E	98	01/90 → 07/92	FCP775	LUCAS/TRW				
2.3 E	98	01/90 → 07/92				FCP596	LUCAS/TRW	
2.3 E	98	08/92 → 12/96	FCP775	LUCAS/TRW				
2.3 E	98	08/92 → 12/96				FCP596	LUCAS/TRW	
2.8 E	128	01/91 → 12/96	FCP590	ATE				
2.8 E	128	01/91 → 12/96				FCP596	LUCAS/TRW	
Coupe Quattro								
1.8		11/84 → 08/87	FCP774	LUCAS/TRW				
1.8		11/84 → 08/87				FCP596	LUCAS/TRW	
2.0 10V	118	09/80 → 10/84	FCP370	LUCAS/TRW				
2.0 10V	118	11/84 → 09/88	FCP774	LUCAS/TRW				
2.0 10V	118	11/84 → 09/88				FCP596	LUCAS/TRW	
2.2	89, 100	01/85 → 09/88	FCP774	LUCAS/TRW				
2.2	89, 100	01/85 → 09/88				FCP596	LUCAS/TRW	
2.3	98	01/85 → 09/88	FCP774	LUCAS/TRW				
2.3	98	01/85 → 09/88				FCP596	LUCAS/TRW	
Q2 (GAB)								
1.0 TFSI	85	10/16 →	FCP4433	TRW	Disc Diam mm:312,For PR code:1ZA			
1.0 TFSI	85	10/16 →				FCP4434	ATE	Disc Diam mm:272,For PR code:1KE
1.4 TFSI	110	06/16 →	FCP4433	TRW	Disc Diam mm:312,For PR code:1ZA			
1.4 TFSI	110	06/16 →				FCP4434	ATE	Disc Diam mm:272,For PR code:1KE
1.6 TDI	85	06/16 →	FCP4433	TRW	Disc Diam mm:312,For PR code:1ZA			
1.6 TDI	85	06/16 →				FCP4434	ATE	Disc Diam mm:272,For PR code:1KE
2.0 TDI	110	09/16 →	FCP4433	TRW	Disc Diam mm:312,For PR code:1ZA			
2.0 TDI	110	09/16 →				FCP4434	ATE	Disc Diam mm:272,For PR code:1KE
2.0 TDI quattro	110	09/16 →	FCP4433	TRW	Disc Diam mm:312,For PR code:1ZA			
2.0 TDI quattro	110	09/16 →				FCP4434	ATE	Disc Diam mm:272,For PR code:1KE
2.0 TDI quattro	140	07/16 →	FCP4433	TRW	Disc Diam mm:312,For PR code:1ZA			
2.0 TDI quattro	140	07/16 →				FCP4434	ATE	Disc Diam mm:272,For PR code:1KE
Q3 (8U)								
2.5 RS quattro	250	02/15 →	FCP1664	BREMBO	PR 1LA,1ZT			
Q3 (8UB, 8UG)								
RS 2.5 quattro	228	02/15 →	FCP1664	BREMBO	PR 1LA,1ZT			
Q5								
2.0 Tdi Quattro	125	11/08 →	FCP4044	LUCAS/TRW				
2.0 Tdi Quattro	125	11/08 →				FCP4050	LUCAS/TRW	
2.0 TFSI	155	11/08 →	FCP4044	LUCAS/TRW				
2.0 TFSI	155	11/08 →				FCP4050	LUCAS/TRW	
3.0 TDI Quattro	176	11/08 →	FCP4044	LUCAS/TRW				
3.0 TDI Quattro	176	11/08 →				FCP4050	LUCAS/TRW	
3.2 FSI Quattro	199	11/08 →	FCP4044	LUCAS/TRW				
3.2 FSI Quattro	199	11/08 →				FCP4050	LUCAS/TRW	
Q7								
3.0 TDI	155	03/06 → 05/10	FCP4064	BREMBO	PR 1LT			
3.0 TDI	171	03/06 → 05/08	FCP4064	BREMBO	PR 1LT			
3.0 TDI Quattro	171	03/06 →	FCP1626	BREMBO				
3.6 FSI Quattro	206	08/06 →	FCP1626	BREMBO				
4.2 FSI Quattro	257	03/06 →	FCP1626	BREMBO				
Q7 (4L)								
3.6 FSI	206	08/06 → 05/10	FCP4064	BREMBO	PR 1LT			
3.6 FSI	206	08/06 → 05/10				FCP1308	BREMBO	For PR number 2EA
4.2 FSI	257	03/06 → 05/10	FCP4064	BREMBO	PR 1LT			
4.2 FSI	257	03/06 → 05/10				FCP1308	BREMBO	For PR number 2EA
4.2 TDI	240	03/07 → 06/09	FCP4064	BREMBO	PR 1LT			
4.2 TDI	240	03/07 → 06/09	FCP1626	BREMBO				
4.2 TDI	240	03/07 → 06/09				FCP1308	BREMBO	For PR number 2EA
6.0 TDI	368	09/08 → 05/14				FCP1308	BREMBO	For PR number 2EA
R8								
4.2 FSI quattro	309	04/07 → 09/10	FCP1664	BREMBO				
4.2 FSI quattro	309	04/07 → 09/10	FCP4467	BREMBO	NOT FOR CERAMIC DISCS			
4.2 FSI quattro	309	04/07 → 09/10				FCP1281	BREMBO	
4.2 FSI quattro	316	07/10 → 07/15	FCP1664	BREMBO	PR 1LA			
4.2 FSI quattro	316	07/10 → 07/15	FCP4467	BREMBO	NOT FOR CERAMIC DISCS			
4.2 FSI quattro	316	07/10 → 07/15				FCP1281	BREMBO	PR 2ED
5.2 FSI quattro	386	04/09 → 07/15	FCP1664	BREMBO	PR 1LA			
5.2 FSI quattro	386	04/09 → 07/15	FCP4467	BREMBO	NOT FOR CERAMIC DISCS			

For material availability see page 16-18 / Per la disponibilità materiali vedere a pagina 16-18

FERODO RACING
Updated on November 2020

...AUDI	kW				NOTE			NOTE
...R8								
5.2 FSI quattro	386	04/09 → 07/15				FCP1281	BREMBO	PR 2ED
5.2 FSI quattro	404	05/12 → 07/15	FCP1664	Brembo				
5.2 FSI quattro	404	05/12 → 07/15	FCP4467	BREMBO	NOT FOR CERAMIC DISCS			
5.2 FSI quattro	412	11/10 → 07/15	FCP1664	BREMBO	PR 1LA			
5.2 FSI quattro	412	11/10 → 07/15	FCP4467	BREMBO	NOT FOR CERAMIC DISCS			
5.2 FSI quattro	412	11/10 → 07/15				FCP1664	BREMBO	PR 2ED
5.2 FSI quattro	419	07/14 → 07/15	FCP4467	BREMBO	NOT FOR CERAMIC DISCS			
GT4		01/18 →	FRP3128	BREMBO				
GT4		01/18 →				FRP1078	BREMBO	
LMS GT3		01/16 →	FRP3153	BREMBO				
LMS GT3		12/16 →				FRP3156	BREMBO	
R8 Spyder								
4.2 FSI quattro	316	09/10 → 07/15	FCP1664	BREMBO	PR 1LA			
4.2 FSI quattro	316	09/10 → 07/15	FCP4467	BREMBO	NOT FOR CERAMIC DISCS			
4.2 FSI quattro	316	09/10 → 07/15				FCP1281	BREMBO	PR 2ED
5.2 FSI quattro	386	02/10 → 07/15	FCP1664	BREMBO	PR 1LA			
5.2 FSI quattro	386	02/10 → 07/15	FCP4467	BREMBO	NOT FOR CERAMIC DISCS			
5.2 FSI quattro	386	02/10 → 07/15				FCP1281	BREMBO	PR 2ED
5.2 FSI quattro	404	05/12 →	FCP4467	BREMBO	NOT FOR CERAMIC DISCS			
5.2 FSI quattro	412	11/11 → 07/15	FCP1664	BREMBO	PR 1LA			
5.2 FSI quattro	412	11/11 → 07/15	FCP4467	BREMBO	NOT FOR CERAMIC DISCS			
5.2 FSI quattro	412	11/11 → 07/15				FCP1664	BREMBO	PR 2ED
S8 Quattro								
4.2 32V	250	07/96 → 09/98	FCP590	ATE				
4.2 32V	250	07/96 → 09/98				FCP596	LUCAS/TRW	
4.2 40V	265	06/99 →	FCP891	ATE				
Sport Quattro								
2.1	225	01/80 → 07/86	FCP775	LUCAS/TRW				
2.1	225	01/80 → 07/86				FCP596	LUCAS/TRW	
2.2		01/80 → 07/86	FCP775	LUCAS/TRW				
2.2		01/80 → 07/86				FCP596	LUCAS/TRW	
TT								
1.8 20V	132	04/99 →	FCP590	ATE				
1.8 20V, Coupe Roadster	132	04/99 →	FCP590	ATE				
1.8 20V, Coupe Roadster	132	04/99 →				FCP541	LUCAS/TRW	
TT (8J3)								
1.8 TFSI	118	06/08 → 06/14	FCP1641	ATE	For PR code:1LJ/1LL			
1.8 TFSI	118	06/08 → 06/14	FCP4223	ATE	For PR code:1LK/1LM			
1.8 TFSI	118	06/08 → 06/14				FCP1636	LUCAS/TRW	Disc Diam mm:286,For PR code:1KZ/2ED
2.0 TDI quattro	125	06/08 → 06/14	FCP1641	ATE	For PR code:1LJ/1LL,From Chassis:8J8011001			
2.0 TDI quattro	125	06/08 → 06/14	FCP4223	ATE	For PR code:1LK/1LM,From Chassis:8J8028001			
2.0 TDI quattro	125	06/08 → 06/14				FCP1636	LUCAS/TRW	Disc Diam mm:286,For PR code:1KJ/2EE
2.0 TFSI	147	08/06 → 06/10	FCP1641	ATE	Disc Diam mm:312,For PR code:1LJ,1LL			
2.0 TFSI	147	08/06 → 06/10	FCP4223	ATE	For PR code:1LK/1LM			
2.0 TFSI	147	08/06 → 06/10				FCP1636	LUCAS/TRW	Disc Diam mm:286,For PR code:1KZ/2ED
2.0 TFSI quattro	147	06/08 → 06/10	FCP1641	ATE	For PR code:1LJ/1LL,From Chassis:8J8011001			
2.0 TFSI quattro	147	06/08 → 06/10	FCP4223	ATE	For PR code:1LK/1LM,From Chassis:8J8028001			
2.0 TFSI quattro	147	06/08 → 06/10				FCP1636	LUCAS/TRW	Disc Diam mm:286,For PR code:1KJ/2EE
2.0 TTS quattro	195	05/08 → 06/14	FCP4223	ATE				
2.0 TTS quattro	195	05/08 → 06/14				FCP1636	LUCAS/TRW	
2.0 TTS quattro	200	05/08 → 06/14	FCP1765	ATE				
2.0 TTS quattro	200	05/08 → 06/14	FCP4223	ATE				
2.0 TTS quattro	200	05/08 → 06/14				FCP1636	LUCAS/TRW	
2.5 RS quattro	265	05/11 → 06/14	FCP1334	BREMBO	For PR number 1LA			
2.5 RS quattro	265	05/11 → 06/14				FCP1636	LUCAS/TRW	For PR number 2EG
2.5 TFSI Quattro	250	07/09 → 06/14	FCP1334	BREMBO				
2.5 TFSI Quattro	250	07/09 → 06/14				FCP1636	LUCAS/TRW	
3.2 V6 quattro	184	08/06 → 06/10	FCP1641	ATE				
3.2 V6 quattro	184	08/06 → 06/10	FCP1765	ATE				
3.2 V6 quattro	184	08/06 → 06/10	FCP4223	ATE	For PR code:1LK/1LM			
3.2 V6 quattro	184	08/06 → 06/10				FCP1636	LUCAS/TRW	Disc Diam mm:286,For PR code:1KJ/2EE
TT (FV3)								
1.8 TFSI	132	08/15 →	FCP4433	LUCAS/TRW				
1.8 TFSI	132	08/15 →				FCP4697	ATE	For PR code:2ED/2EG/2EK
1.8 TFSI	132	08/15 →				FCP4434	ATE	For PR code:1KZ
2.0 TDI	135	07/14 →	FCP4433	LUCAS/TRW				
2.0 TDI	135	07/14 →				FCP4697	ATE	For PR code:2ED/2EG/2EK
2.0 TDI	135	07/14 →				FCP4434	ATE	For PR code:1KZ
2.0 TDI quattro	135	01/17 →	FCP4433	TRW	Disc Diam mm:312,For PR code:1LJ/1ZD			
2.0 TDI quattro	135	01/17 →				FCP4434	ATE	Disc Diam mm:272,For PR code:1KZ

For material availability see page 16-18 / Per la disponibilità materiali vedere a pagina 16-18



kW

...AUDI

...TT (FV3)									
2.0 TFSI	169	07/14 →	**FCP4433**	LUCAS/TRW					
2.0 TFSI	169	07/14 →				**FCP4697**	ATE	For PR code:2ED/2EG/2EK	
2.0 TFSI quattro	169	07/14 →	**FCP4433**	LUCAS/TRW					
2.0 TFSI quattro	169	07/14 →				**FCP4697**	ATE	For PR code:2ED/2EG/2EK	
2.0 TTS quattro	210	02/15 →	**FCP4433**	LUCAS/TRW					
2.0 TTS quattro	210	02/15 →				**FCP4697**	ATE	Disc Diam mm:300/310,For PR code:2ED/2EG/2EK	
2.0 TTS quattro	228	11/14 →	**FCP4433**	LUCAS/TRW	Pr Number 1LJ,1ZD				
2.0 TTS quattro	228	11/14 →				**FCP4697**	ATE	For PR code:2ED	
2.5 RS Quattro	294	10/16 →	**FCP4433**	LUCAS/TRW	For PR number 1LJ, 1ZD				
2.5 RS Quattro	294	10/16 →				**FCP4697**	ATE	For PR number 1KZ, 2EG, 2EK, 2ED	
TT Quattro									
1.8 20V		04/99 →	**FCP590**	ATE					
1.8 20V		04/99 →				**FCP541**	LUCAS/TRW		
TT Quattro (8N9-8N3)									
3.2 24v	184	07/03 → 12/06	**FCP1001**	ATE	PR 1ZT				
3.2 24v	184	07/03 → 12/06				**FCP1491**	LUCAS/TRW		
TT Roadster (8J9)									
1.8 TFSI	118	06/08 → 06/14	**FCP1641**	ATE	For PR code:1LJ/1LL				
1.8 TFSI	118	06/08 → 06/14	**FCP4223**	ATE	For PR code:1LK/1LM				
1.8 TFSI	118	06/08 → 06/14				**FCP1636**	LUCAS/TRW	Disc Diam mm:286,For PR code:1KZ/2ED	
2.0 TDI quattro	125	06/08 → 06/14	**FCP1641**	ATE	For PR code:1LJ/1LL,From Chassis:8J8011001				
2.0 TDI quattro	125	06/08 → 06/14	**FCP4223**	ATE	For PR code:1LK/1LM,From Chassis:8J8028001				
2.0 TDI quattro	125	06/08 → 06/14				**FCP1636**	LUCAS/TRW	Disc Diam mm:286,For PR code:1KJ/2EE	
2.0 TFSI	147	03/07 → 06/10	**FCP1641**	ATE	Disc Diam mm:312,For PR code:1LJ,1LL				
2.0 TFSI	147	03/07 → 06/10	**FCP4223**	ATE	For PR code:1LK/1LM				
2.0 TFSI	147	03/07 → 06/10				**FCP1636**	LUCAS/TRW	Disc Diam mm:286,For PR code:1KZ/2ED	
2.0 TFSI quattro	147	06/08 → 06/10	**FCP1641**	ATE	For PR code:1LJ/1LL,From Chassis:8J8011001				
2.0 TFSI quattro	147	06/08 → 06/10	**FCP4223**	ATE	For PR code:1LK/1LM,From Chassis:8J8028001				
2.0 TFSI quattro	147	06/08 → 06/10				**FCP1636**	LUCAS/TRW	Disc Diam mm:286,For PR code:1KJ/2EE	
2.0 TTS quattro	195	05/08 → 06/14	**FCP4223**	ATE					
2.0 TTS quattro	195	05/08 → 06/14				**FCP1636**	LUCAS/TRW	For PR code:2EA/2EF/2EG	
2.0 TTS quattro	200	05/08 → 06/14	**FCP1765**	ATE					
2.0 TTS quattro	200	05/08 → 06/14	**FCP4223**	ATE					
2.0 TTS quattro	200	05/08 → 06/14				**FCP1636**	LUCAS/TRW		
2.5 TFSI Quattro	250	07/09 → 06/14	**FCP1334**	BREMBO					
2.5 TFSI Quattro	250	07/09 → 06/14				**FCP1636**	LUCAS/TRW		
2.5 TFSI Quattro	265	03/12 → 06/14	**FCP1334**	BREMBO	PR 2EA,2EF,2EG				
2.5 TFSI Quattro	265	03/12 → 06/14				**FCP1636**	LUCAS/TRW		
3.2 V6 quattro	184	03/07 → 06/10	**FCP1765**	ATE					
3.2 V6 quattro	184	03/07 → 06/10	**FCP4223**	ATE	For PR code:1LK/1LM				
3.2 V6 quattro	184	03/07 → 06/10				**FCP1636**	LUCAS/TRW	Disc Diam mm:286,For PR code:1KJ/2EE	
TT Roadster (FV9)									
1.8 TFSI	132	08/15 →	**FCP4433**	LUCAS/TRW					
1.8 TFSI	132	08/15 →				**FCP4697**	ATE	For PR code:2ED/2EG/2EK	
1.8 TFSI	132	08/15 →				**FCP4434**	ATE	For PR code:1KZ	
2.0 TDI	135	11/14 →	**FCP4433**	LUCAS/TRW					
2.0 TDI	135	11/14 →				**FCP4697**	ATE	For PR code:2ED/2EG/2EK	
2.0 TDI	135	11/14 →				**FCP4434**	ATE	For PR code:1KZ	
2.0 TDI quattro	135	01/17 →	**FCP4433**	TRW	Disc Diam mm:312,For PR code:1LJ/1ZD				
2.0 TDI quattro	135	01/17 →				**FCP4434**	ATE	Disc Diam mm:272,For PR code:1KZ	
2.0 TFSI	169	11/14 →	**FCP4433**	LUCAS/TRW					
2.0 TFSI	169	11/14 →				**FCP4697**	ATE	For PR code:2ED/2EG/2EK	
2.0 TFSI quattro	169	11/14 →	**FCP4433**	LUCAS/TRW					
2.0 TFSI quattro	169	11/14 →				**FCP4697**	ATE	For PR code:2ED/2EG/2EK	
2.0 TFSI quattro	215	07/15 →				**FCP4697**	ATE		
2.0 TTS quattro	210	02/15 →	**FCP4433**	LUCAS/TRW					
2.0 TTS quattro	210	02/15 →				**FCP4697**	ATE	Disc Diam mm:300/310,For PR code:2ED/2EG/2EK	
2.0 TTS quattro	228	11/14 →	**FCP4433**	LUCAS/TRW					
2.0 TTS quattro	228	11/14 →				**FCP4697**	ATE	For PR code:2ED	

For material availability see page 16-18 / Per la disponibilità materiali vedere a pagina 16-18

FERODO RACING
Updated on November 2020

	kW				NOTE			NOTE
AUTOBIANCHI								
A 111								
1.4	51	08/69 → 11/72	**FCP29**	BENDIX				
1.4	51	08/69 → 11/72				**FCP22**	BENDIX	
A112								
0.9	35, 37	06/71 → 10/82	**FCP29**	BENDIX				
0.9	35, 37	11/82 → 12/86	**FCP29**	BENDIX				
1.0	35, 37	06/71 → 10/82	**FCP29**	BENDIX				
1.0	35, 37	11/82 → 12/86	**FCP29**	BENDIX				
PRIMULA Berlina								
1.2	48	01/68 → 12/70				**FCP22**	BENDIX	
Y10								
1.0		01/90 → 12/96	**FCP351**	BENDIX				
1.0 (Fire/Touring/4WD)	33	02/85 → 12/89	**FCP351**	BENDIX				
1.0 (Fire/Touring/4WD)	33	01/89 → 12/92	**FCP351**	BENDIX				
1.0 (Fire/Touring/4WD)	33	01/93 → 12/96	**FCP351**	BENDIX				
1.0 (Turbo)		02/85 → 12/89	**FCP370**	LUCAS/TRW				
1.0 (Turbo)	33	01/89 → 12/92	**FCP351**	BENDIX				
1.0 (Turbo)	33	01/93 → 12/96	**FCP351**	BENDIX				
1.1		01/85 → 12/89	**FCP370**	LUCAS/TRW				
1.1		01/90 → 12/96	**FCP351**	BENDIX				
1.1 (Fire/Touring/4WD)	37	06/86 → 12/92	**FCP351**	BENDIX				
1.1 (Fire/Touring/4WD)	37	01/93 → 12/96	**FCP351**	BENDIX				
1.3		01/90 → 12/96	**FCP370**	LUCAS/TRW				
1.3 ie GT	57	02/85 → 12/88	**FCP370**	LUCAS/TRW				
1.3 ie GT	57	01/89 → 12/94	**FCP370**	LUCAS/TRW				
1.3 ie GT	57	01/94 → 12/96	**FCP370**	LUCAS/TRW				
1.3 Not ie GT		02/85 → 12/92	**FCP351**	BENDIX				
1.3 Not ie GT		01/93 → 12/96	**FCP351**	BENDIX				
BENTLEY								
Continental								
GT3		01/18 →	**FRP3153**	ALCON				
GT3		01/18 →				**FRP1078**	ALCON	
BMW								
02 (E10)								
1502 1.6	55	01/75 → 12/77	**FCP2**	ATE				
1600Ti 1.6	63	01/64 → 12/66	**FCP2**	ATE				
1 (E81)								
116 d	66	01/11 → 12/11				**FCP1806**	LUCAS/TRW	
116 d	85	11/08 → 09/12	**FCP1747**	LUCAS/TRW				
116 d	85	11/08 → 09/12				**FCP1806**	LUCAS/TRW	
116 i	85	03/07 → 09/12	**FCP1747**	LUCAS/TRW				
116 i	85	03/07 → 09/12				**FCP1806**	LUCAS/TRW	
118 d	90	09/06 → 09/12	**FCP1747**	LUCAS/TRW				
118 d	90	09/06 → 09/12				**FCP1806**	LUCAS/TRW	
118i	95	09/06 → 09/12	**FCP1747**	LUCAS/TRW				
118i	95	09/06 → 09/12				**FCP1806**	LUCAS/TRW	
120 d	120	09/06 → 09/12	**FCP1751**	ATE				
120 d	120	09/06 → 09/12				**FCP1806**	LUCAS/TRW	
120 i	125	09/06 → 12/11	**FCP1773**	ATE	For vehicles without Sport package			
120 i	125	09/06 → 12/11				**FCP1806**	LUCAS/TRW	For vehicles without Sport package
120 i	125	09/06 → 12/11				**FCP1807**	ATE	For vehicles with Sport package
120 i	110	09/06 → 09/12	**FCP1751**	ATE				
120 i	110	09/06 → 09/12				**FCP1807**	ATE	
123 d	150	03/07 → 09/12	**FCP1773**	ATE				
123 d	150	03/07 → 09/12				**FCP1807**	ATE	
130 i	195	09/06 → 09/12	**FCP1773**	ATE				
130 i	195	09/06 → 09/12				**FCP1807**	ATE	
1 (E82)								
120d Coupe'	130	10/07 →	**FCP1773**	ATE				
120d Coupe'	130	10/07 →				**FCP1807**	ATE	
123d Coupe'	150	10/07 →	**FCP1773**	ATE				
123d Coupe'	150	10/07 →				**FCP1807**	ATE	
125i Coupe'	160	10/07 →	**FCP1773**	ATE				
125i Coupe'	160	10/07 →				**FCP1807**	ATE	

For material availability see page 16-18 / Per la disponibilità materiali vedere a pagina 16-18

...BMW	kW				NOTE			NOTE
...1 (E82)								
135i Coupe'	225	10/07 →	**FCP4218**	BREMBO				
135i Coupe'	225	10/07 →				**FCP4217**	BREMBO	
3.0 M Coupe' std caliper	250	04/11 →	**FCP1628**	ATE				
3.0 M Coupe' std caliper	250	04/11 →	**FCP4218**	BREMBO				
3.0 M Coupe' std caliper	250	04/11 →				**FCP1672**	ATE	
3.0 M Coupe' std caliper	250	04/11 →				**FCP4217**	BREMBO	
1 (E87)								
116 d	66	01/11 → 12/11				**FCP1806**	LUCAS/TRW	
116 d	85	12/08 → 09/12	**FCP1747**	LUCAS/TRW				
116 d	85	12/08 → 09/12				**FCP1806**	LUCAS/TRW	
116 i	85	11/03 → 09/12	**FCP1747**	LUCAS/TRW				
116 i	85	11/03 → 09/12				**FCP1806**	LUCAS/TRW	
118 d	90	11/03 → 09/12	**FCP1747**	LUCAS/TRW				
118 d	90	11/03 → 09/12				**FCP1806**	LUCAS/TRW	
118i	95	07/04 → 09/12	**FCP1747**	LUCAS/TRW				
118i	95	07/04 → 09/12				**FCP1806**	LUCAS/TRW	
120 d	120	11/03 → 09/12	**FCP1751**	ATE				
120 d	120	11/03 → 09/12				**FCP1806**	LUCAS/TRW	
120 i	110	11/03 → 09/12	**FCP1751**	ATE				
120 i	110	11/03 → 09/12				**FCP1807**	ATE	
123 d	150	03/07 → 09/12	**FCP1773**	ATE				
123 d	150	03/07 → 09/12				**FCP1807**	ATE	
130 i	195	03/05 → 09/12	**FCP1773**	ATE				
130 i	195	03/05 → 09/12				**FCP1807**	ATE	
1 (E88)								
135i Cabriolet	225	01/08 →	**FCP4218**	BREMBO				
135i Cabriolet	225	01/08 →				**FCP4217**	BREMBO	
1 (F20)								
114 d	70	10/12 →	**FCP4611**	Brembo	For vehicles with sports package			
114 d	70	10/12 →	**FCP4489**	BOSCH				
114 d	70	10/12 →				**FCP4663**	Brembo	For vehicles with sports package
114 i	75	11/11 →	**FCP4611**	Brembo	For vehicles with sports package			
114 i	75	11/11 →	**FCP4489**	BOSCH				
114 i	75	11/11 →				**FCP4663**	Brembo	For vehicles with sports package
116 d	85	11/12 →	**FCP4611**	Brembo	For vehicles with sports package			
116 d	85	11/12 →	**FCP4489**	BOSCH				
116 d	85	11/12 →				**FCP4663**	Brembo	For vehicles with sports package
116 d	85	12/10 →	**FCP4611**	Brembo	For vehicles with sports package			
116 d	85	12/10 →	**FCP4489**	BOSCH				
116 d	85	12/10 →				**FCP4663**	Brembo	For vehicles with sports package
116 i	100	12/10 →	**FCP4611**	Brembo	For vehicles with sports package			
116 i	100	12/10 →	**FCP4489**	BOSCH				
116 i	100	12/10 →				**FCP4663**	Brembo	For vehicles with sports package
118 d	100	12/10 →	**FCP4611**	Brembo	For vehicles with sports package			
118 d	100	12/10 →	**FCP4489**	BOSCH				
118 d	100	12/10 →				**FCP4663**	Brembo	For vehicles with sports package
118 d	105	12/10 →	**FCP4611**	Brembo	For vehicles with sports package			
118 d	105	12/10 →	**FCP4489**	BOSCH				
118 d	105	12/10 →				**FCP4663**	Brembo	For vehicles with sports package
118 d	110	03/15 →	**FCP4611**	BREMBO				
118 d	110	03/15 →	**FCP4394**	BOSCH	only for South Korea & North Korea vehicles			
118 d	110	03/15 →	**FCP4489**	BOSCH				
118 d	110	03/15 →				**FCP4663**	BREMBO	
118 d xDrive	105	07/13 →	**FCP4611**	Brembo	For vehicles with sports package			
118 d xDrive	105	07/13 →	**FCP4489**	BOSCH				
118 d xDrive	105	07/13 →				**FCP4663**	BREMBO	For vehicles with sports package
118 d xDrive	110	03/15 →	**FCP4489**	BOSCH				
118 i	125	11/10 →	**FCP4611**	Brembo	For vehicles with sports package			
118 i	125	11/10 →	**FCP4489**	BOSCH				
118 i	125	11/10 →				**FCP4663**	Brembo	For vehicles with sports package
120 d	120	12/10 →	**FCP4611**	Brembo	For vehicles with sports package			
120 d	120	12/10 →	**FCP4489**	BOSCH				
120 d	120	12/10 →				**FCP4663**	Brembo	For vehicles with sports package
120 d	135	12/10 →	**FCP4611**	Brembo	For vehicles with sports package			
120 d	135	12/10 →	**FCP4489**	BOSCH				
120 d	135	12/10 →				**FCP4663**	Brembo	For vehicles with sports package
120 d	140	03/15 →	**FCP4489**	BOSCH				
120 d	147	01/11 →	**FCP4489**	BOSCH				
120 d xDrive	135	02/12 →	**FCP4611**	Brembo	For vehicles with sports package			
120 d xDrive	135	02/12 →	**FCP4489**	BOSCH				
120 d xDrive	135	02/12 →				**FCP4663**	Brembo	For vehicles with sports package
120 d xDrive	140	03/15 →	**FCP4489**	BOSCH				
120 d xDrive	147	01/11 →	**FCP4489**	BOSCH				
120 i	130	03/15 →	**FCP4489**	BOSCH				

For material availability see page 16-18 / Per la disponibilità materiali vedere a pagina 16-18

FERODO RACING
Updated on November 2020

	kW				NOTE			NOTE
...BMW								
...1 (F20)								
125 d	155	08/11 →	**FCP4611**	Brembo	For vehicles with sports package			
125 d	155	08/11 →	**FCP4394**	BOSCH				
125 d	155	08/11 →	**FCP4489**	BOSCH				
125 d	155	08/11 →				**FCP4663**	Brembo	For vehicles with sports package
125 d	160	08/11 →	**FCP4611**	Brembo	For vehicles with sports package			
125 d	160	08/11 →	**FCP4394**	BOSCH				
125 d	160	08/11 →	**FCP4489**	BOSCH				
125 d	160	08/11 →				**FCP4663**	Brembo	For vehicles with sports package
125 i	160	08/11 →	**FCP4611**	Brembo	For vehicles with sports package			
125 i	160	08/11 →	**FCP4394**	BOSCH				
125 i	160	08/11 →	**FCP4489**	BOSCH				
125 i	160	08/11 →				**FCP4663**	Brembo	For vehicles with sports package
M 135 i	235	11/11 →	**FCP4611**	Brembo	For vehicles with sports package			
M 135 i	235	11/11 →	**FCP4489**	BOSCH				
M 135 i	235	11/11 →				**FCP4663**	Brembo	For vehicles with sports package
M 135 i xDrive	235	02/12 →	**FCP4611**	Brembo	For vehicles with sports package			
M 135 i xDrive	235	02/12 →	**FCP4489**	BOSCH				
M 135 i xDrive	235	02/12 →				**FCP4663**	Brembo	For vehicles with sports package
1 (F21)								
114 d	70	07/12 →	**FCP4611**	Brembo	For vehicles with sports package			
114 d	70	07/12 →	**FCP4489**	BOSCH				
114 d	70	07/12 →				**FCP4663**	Brembo	For vehicles with sports package
114 i	75	12/11 →	**FCP4611**	Brembo	For vehicles with sports package			
114 i	75	12/11 →	**FCP4489**	BOSCH				
114 i	75	12/11 →				**FCP4663**	Brembo	For vehicles with sports package
116 d	85	12/11 →	**FCP4611**	Brembo	For vehicles with sports package			
116 d	85	12/11 →	**FCP4489**	BOSCH				
116 d	85	12/11 →				**FCP4663**	Brembo	For vehicles with sports package
116 d	85	01/12 →	**FCP4611**	Brembo	For vehicles with sports package			
116 d	85	01/12 →	**FCP4489**	BOSCH				
116 d	85	01/12 →				**FCP4663**	Brembo	For vehicles with sports package
116 i	100	12/11 →	**FCP4611**	Brembo	For vehicles with sports package			
116 i	100	12/11 →	**FCP4489**	BOSCH				
116 i	100	12/11 →				**FCP4663**	Brembo	For vehicles with sports package
118 d	100	12/11 →	**FCP4611**	Brembo	For vehicles with sports package			
118 d	100	12/11 →	**FCP4489**	BOSCH				
118 d	100	12/11 →				**FCP4663**	Brembo	For vehicles with sports package
118 d	105	12/11 →	**FCP4611**	Brembo	For vehicles with sports package			
118 d	105	12/11 →	**FCP4489**	BOSCH				
118 d	105	12/11 →				**FCP4663**	Brembo	For vehicles with sports package
118 d xDrive	105	05/13 →	**FCP4611**	Brembo	For vehicles with sports package			
118 d xDrive	105	05/13 →	**FCP4489**	BOSCH				
118 d xDrive	105	05/13 →				**FCP4663**	Brembo	For vehicles with sports package
118 d xDrive	110	03/15 →	**FCP4489**	BOSCH				
118 i	125	07/12 →	**FCP4611**	Brembo	For vehicles with sports package			
118 i	125	07/12 →	**FCP4489**	BOSCH				
118 i	125	07/12 →				**FCP4663**	Brembo	For vehicles with sports package
120 d	120	07/12 →	**FCP4611**	Brembo	For vehicles with sports package			
120 d	120	07/12 →	**FCP4489**	BOSCH				
120 d	120	07/12 →				**FCP4663**	Brembo	For vehicles with sports package
120 d	135	07/12 →	**FCP4611**	Brembo	For vehicles with sports package			
120 d	135	07/12 →	**FCP4489**	BOSCH				
120 d	135	07/12 →				**FCP4663**	Brembo	For vehicles with sports package
120 d	140	03/15 →	**FCP4489**	BOSCH	\			
120 d	147	01/12 →	**FCP4489**	BOSCH				
120 d xDrive	135	02/12 →	**FCP4611**	Brembo	For vehicles with sports package			
120 d xDrive	135	02/12 →	**FCP4489**	BOSCH				
120 d xDrive	135	02/12 →				**FCP4663**	Brembo	For vehicles with sports package
120 d xDrive	140	03/15 →	**FCP4489**	BOSCH				
120 d xDrive	147	01/12 →	**FCP4489**	BOSCH				
120 i	130	03/15 →	**FCP4489**	BOSCH				
125 d	155	12/11 →	**FCP4611**	Brembo	For vehicles with sports package			
125 d	155	12/11 →	**FCP4394**	BOSCH				
125 d	155	12/11 →	**FCP4489**	BOSCH				
125 d	155	12/11 →				**FCP4663**	Brembo	For vehicles with sports package
125 d	160	12/11 →	**FCP4611**	Brembo	For vehicles with sports package			
125 d	160	12/11 →	**FCP4394**	BOSCH				
125 d	160	12/11 →	**FCP4489**	BOSCH				
125 d	160	12/11 →				**FCP4663**	Brembo	For vehicles with sports package
125 i	160	12/11 →	**FCP4611**	Brembo	For vehicles with sports package			
125 i	160	12/11 →	**FCP4394**	BOSCH				
125 i	160	12/11 →	**FCP4489**	BOSCH				
125 i	160	12/11 →				**FCP4663**	Brembo	For vehicles with sports package
M 135 i	235	12/11 →	**FCP4611**	Brembo	For vehicles with sports package			
M 135 i	235	12/11 →	**FCP4489**	BOSCH				
M 135 i	235	12/11 →				**FCP4663**	Brembo	For vehicles with sports package

For material availability see page 16-18 / Per la disponibilità materiali vedere a pagina 16-18

...BMW	kW				NOTE			NOTE
...1 (F21)								
M 135 i xDrive	235	02/12 →	**FCP4611**	Brembo	For vehicles with sports package			
M 135 i xDrive	235	02/12 →	**FCP4489**	BOSCH				
M 135 i xDrive	235	02/12 →				**FCP4663**	Brembo	For vehicles with sports package
M 140 i	250	10/15 →	**FCP4611**	BREMBO	For vehicles with M sport pack			
M 140 i	250	10/15 →				**FCP4663**	BREMBO	for vehicles with M sport pack
1500-2000								
1800 1.8 Ti / TiSA	66	01/63 → 09/71	**FCP2**	ATE				
2 Convertible (F23)								
220 d	120	11/14 →	**FCP4394**	BOSCH				
2 Coupe (F22, F87)								
218 d	105	01/14 →	**FCP4611**	Brembo	For vehicles with sports package			
218 d	105	01/14 →	**FCP4489**	BOSCH				
218 d	105	01/14 →				**FCP4663**	BREMBO	For vehicles with sports package
220 d	135	10/13 →	**FCP4611**	Brembo	For vehicles with sports package			
220 d	135	10/13 →	**FCP4394**	BOSCH				
220 d	135	10/13 →	**FCP4489**	BOSCH				
220 d	135	10/13 →				**FCP4663**	BREMBO	For vehicles with sports package
220 d	140	11/14 →	**FCP4394**	BOSCH				
220 d xDrive	120	03/15 →	**FCP4394**	BOSCH				
220 i	135	10/13 →	**FCP4394**	BOSCH				
225 d	160	01/14 →	**FCP4611**	Brembo	For vehicles with sports package			
225 d	160	01/14 →	**FCP4489**	BOSCH				
225 d	160	01/14 →				**FCP4663**	BREMBO	For vehicles with sports package
M 235 i	240	10/13 →	**FCP4611**	Brembo	For vehicles with sports package			
M 235 i	240	10/13 →	**FCP4489**	BOSCH				
M 235 i	240	10/13 →				**FCP4663**	Brembo	For vehicles with sports package
M 240 i	250	09/15 →	**FCP4611**	BREMBO				
M 240 i	250	09/15 →				**FCP4663**	BREMBO	
M2	272	01/15 →	**FCP4712**	BREMBO	2NH Brake System			
M2	272	01/15 →				**FCP1281**	BREMBO	2NH Brake system
M2	272	11/15 →	**FCP4611**	BREMBO	For vehicles without ceramic discs			
M2	272	11/15 →	**FCP4489**	BOSCH				
M2	272	11/15 →				**FCP4663**	BREMBO	For vehicles without ceramic discs
2500-3.3 (E3)								
2500 CS, Automatic	110	01/68 → 12/76	**FCP399**	ATE				
2800	125	01/68 → 12/76	**FCP399**	ATE				
3.0	132, 143	01/71 → 12/77	**FCP399**	ATE				
3.2	140, 146	01/71 → 12/77	**FCP399**	ATE				
3								
1.8 16V M3	100	01/86 → 12/93	**FCP256**	ATE				
1.8 16V M3	100	01/86 → 12/93				**FCP578**	ATE	
3 (E21)								
315	55	03/81 → 03/84	**FCP116**	ATE				
320	80	08/75 → 08/77	**FCP116**	ATE				
320i	92	07/75 → 08/82	**FCP116**	ATE				
323i	105	01/78 → 10/82	**FCP116**	ATE				
3 (E30)								
316 / 316i / 316i 1.8	66	11/82 → 12/91				**FCP296**	ATE	
316 / 316i / 316i 1.8	74	11/82 → 12/91				**FCP296**	ATE	
316 / 316i / 316i 1.8	75	11/82 → 12/91				**FCP296**	ATE	
318i	66	02/82 → 06/91	**FCP660**	LUCAS/TRW				
318i	66	02/82 → 06/91				**FCP296**	ATE	
318i	77	02/82 → 06/91	**FCP660**	LUCAS/TRW				
318i	77	02/82 → 06/91				**FCP296**	ATE	
318i	85	02/82 → 06/91	**FCP660**	LUCAS/TRW				
318i	85	02/82 → 06/91				**FCP296**	ATE	
318i (E30)	66	11/82 → 08/91	**FCP660**	LUCAS/TRW				
318i (E30)	66	11/82 → 08/91				**FCP296**	ATE	
318i (E30)	77	11/82 → 08/91	**FCP660**	LUCAS/TRW				
318i (E30)	77	11/82 → 08/91				**FCP296**	ATE	
318is	75	11/82 → 08/91	**FCP660**	LUCAS/TRW				
318is	75	11/82 → 08/91				**FCP296**	ATE	
320 i	110	12/85 → 06/90	**FCP660**	LUCAS/TRW				
320 i	110	12/85 → 06/90				**FCP296**	ATE	
320 i	92	09/82 → 12/91	**FCP660**	LUCAS/TRW				
320 i	92	09/82 → 12/91				**FCP296**	ATE	
320 i	95	12/85 → 06/91	**FCP660**	LUCAS/TRW				
320 i	95	12/85 → 06/91				**FCP296**	ATE	
320 is	141	05/88 → 12/90	**FCP660**	LUCAS/TRW				

For material availability see page 16-18 / Per la disponibilità materiali vedere a pagina 16-18

...BMW	kW				NOTE			NOTE
...3 (E30)								
320 is	141	05/88 → 12/90				FCP296	ATE	
323i	102, 110	10/82 → 12/91	FCP660	LUCAS/TRW				
323i	102, 110	10/82 → 12/91				FCP296	ATE	
324d	63	01/85 → 08/91	FCP660	LUCAS/TRW				
324d	63	01/85 → 08/91				FCP296	ATE	
324td	85	01/87 → 08/91	FCP660	LUCAS/TRW				
324td	85	01/87 → 08/91				FCP296	ATE	
325e 2.7	90, 95	09/83 → 12/88	FCP660	LUCAS/TRW				
325e 2.7	90, 95	09/83 → 12/88				FCP296	ATE	
325i /325 iX	125, 126	09/83 → 08/91	FCP660	LUCAS/TRW				
325i /325 iX	125, 126	09/83 → 08/91				FCP296	ATE	
M3 2.3	143	07/86 → 06/91	FCP256	ATE				
M3 2.3	143	07/86 → 06/91				FCP578	ATE	
M3 2.3	147	02/87 → 05/89	FCP256	ATE				
M3 2.3	147	02/87 → 05/89				FCP578	ATE	
M3 2.3	158	07/85 → 06/91	FCP256	ATE				
M3 2.3	158	07/85 → 06/91				FCP578	ATE	
3 (E36)								
3.0 3/C 24V M3	210, 286	09/90 → 03/95	FCP779	ATE				
3.0 3/C 24V M3	210, 286	09/90 → 03/95				FCP578	ATE	
3.2 3/C 24V M3	236	09/90 → 03/95	FCP779	ATE				
3.2 3/C 24V M3	236	09/90 → 03/95				FCP578	ATE	
3.2 i 3/C 24V M3	236	04/95 → 04/99	FCP779	ATE				
3.2 i 3/C 24V M3	236	04/95 → 04/99				FCP578	ATE	
316i	73, 75	09/90 → 12/98	FCP725	ATE				
316i	73, 75	09/90 → 12/98				FCP850	ATE	
316i	74	09/90 → 09/93	FCP725	ATE				
316i	74	09/90 → 09/93				FCP850	ATE	ABS
316i Compact	75	07/93 → 02/98	FCP725	ATE				
316i Compact	75	07/93 → 02/98				FCP850	ATE	
318 i	83	12/90 → 10/93	FCP725	ATE				
318 i	83	12/90 → 10/93				FCP850	ATE	
318 i	85	10/93 → 02/98	FCP725	ATE				
318 i	85	10/93 → 02/98				FCP850	ATE	
318 is	103	03/93 → 02/98	FCP725	ATE				
318 is	103	03/93 → 02/98				FCP850	ATE	
318 is	103	09/95 → 02/98	FCP725	ATE				
318 is	103	09/95 → 02/98				FCP850	ATE	
318i (E36)	66	08/94 → 01/98	FCP725	ATE				
318i (E36)	66	08/94 → 01/98				FCP850	ATE	ABS
320i	110	09/90 → 01/98	FCP725	ATE				
320i	110	09/90 → 01/98				FCP850	ATE	
323i 2.5	125	03/95 → 02/98	FCP1300	ATE				
323i 2.5	125	03/95 → 02/98				FCP850	ATE	
325i	141	08/90 → 03/95	FCP725	ATE				
325i	141	08/90 → 03/95				FCP850	ATE	
325tds	85, 105	09/91 → 02/98	FCP725	ATE				
325tds	85, 105	09/91 → 02/98				FCP850	ATE	
328i	143	01/95 → 02/98	FCP725	ATE				
328i	143	01/95 → 02/98				FCP850	ATE	
3 (E40)								
3.2 i M3	236	04/95 → 04/99	FCP779	ATE				
3.2 i M3	236	04/95 → 04/99				FCP857	ATE	
3 (E46)								
3.2 Coupe M3	252	01/00 → 12/06	FCP779	ATE				
3.2 Coupe M3	252	06/00 → 12/06				FCP1483	ATE	
318 d	85	09/01 → 03/03	FCP1300	ATE				
318 d	85	09/01 → 03/03				FCP1301	ATE	
318 d	85	03/03 → 02/05	FCP1300	ATE				
318 d	85	03/03 → 02/05				FCP1301	ATE	
318i	105	02/98 → 02/05	FCP1300	ATE				
318i	105	02/98 → 02/05				FCP1301	ATE	
318i	77	02/98 → 02/05	FCP1300	ATE				
318i	77	02/98 → 02/05				FCP1301	ATE	
318i	87	02/98 → 02/05	FCP1300	ATE				
318i	87	02/98 → 02/05				FCP1301	ATE	
320 d	100	04/98 → 09/01	FCP1300	ATE				
320 d	100	04/98 → 09/01				FCP1301	ATE	
320 d	110	09/01 → 02/05	FCP1300	ATE				
320 d	110	09/01 → 02/05				FCP1301	ATE	
320i	110, 125	03/98 → 02/05	FCP1300	ATE				
320i	110, 125	03/98 → 02/05				FCP1301	ATE	
320Tdi 24V	100	02/98 →	FCP1300	ATE				
320Tdi 24V	100	02/98 →				FCP1301	ATE	

For material availability see page 16-18 / Per la disponibilità materiali vedere a pagina 16-18

...BMW

	kW				NOTE			NOTE
...3 (E46)								
323i	125	03/98 → 09/00	**FCP1300**	ATE				
323i	125	03/98 → 09/00				**FCP1301**	ATE	
328i	142	02/98 → 06/00	**FCP1300**	ATE				
328i	142	02/98 → 06/00				**FCP1301**	ATE	
330d / 330Xd	135, 150	10/99 → 02/05	**FCP1073**	ATE				
330d / 330Xd	135, 150	10/99 → 02/05				**FCP1483**	ATE	
330i	170	06/00 → 02/05	**FCP1073**	ATE				
330i	170	06/00 → 02/05				**FCP1483**	ATE	
CSL Coupe M3	265	03/03 → 07/06	**FCP779**	ATE				
CSL Coupe M3	265	03/03 → 07/06				**FCP1483**	ATE	
3 (E90)								
325d 3.0	150	03/10 →	**FCP1773**	ATE				
325d 3.0	150	03/10 →				**FCP1808**	ATE	
325i 2.5	160	03/05 → 12/11	**FCP4191**	ATE				
325i 2.5	160	03/05 → 12/11				**FCP1807**	ATE	
325i 2.5 Xi	160	01/05 → 12/11	**FCP1773**	ATE				
325i 2.5 Xi	160	01/05 → 12/11				**FCP1807**	ATE	
325i 2.5 Xi	160	10/05 → 08/08	**FCP4191**	ATE				
325i 2.5 Xi	160	10/05 → 08/08				**FCP1807**	ATE	
325i 3.0	155	06/06 → 12/11	**FCP4191**	ATE				
325i 3.0	155	06/06 → 12/11				**FCP1807**	ATE	
325i xDrive 2.5	160	09/08 → 12/11	**FCP4191**	ATE				
325i xDrive 2.5	160	09/08 → 12/11				**FCP1807**	ATE	
328i 3.0	172	03/07 → 12/11	**FCP4191**	ATE				
328i 3.0	172	03/07 → 12/11				**FCP1807**	ATE	
330d 3.0	170	03/05 → 09/07	**FCP1773**	ATE				
330d 3.0	170	03/05 → 09/07				**FCP1808**	ATE	
330d 3.0	180	09/08 →	**FCP1773**	ATE				
330d 3.0	180	09/08 →				**FCP1808**	ATE	
330d xDrive 3.0	180	09/09 →	**FCP1773**	ATE				
330d xDrive 3.0	180	09/09 →				**FCP1808**	ATE	
330i 3.0	190	01/05 → 12/11	**FCP1773**	ATE				
330i 3.0	190	01/05 → 12/11				**FCP1808**	ATE	
330i 3.0 Xi	190	01/05 → 12/11	**FCP1773**	ATE				
330i 3.0 Xi	190	10/05 → 06/07	**FCP1773**	ATE				
330i 3.0 Xi	190	10/05 → 06/07				**FCP1808**	ATE	
330i xDrive 3.0	200	09/08 →	**FCP1773**	ATE				
330i xDrive 3.0	200	09/08 →				**FCP1808**	ATE	
335i	225	09/06 → 12/11	**FCP1628**	ATE				
335i	225	09/06 → 12/11				**FCP1808**	ATE	
3 (E91)								
318d Touring 2.0	100	09/07 →	**FCP4191**	ATE				
318d Touring 2.0	100	09/07 →				**FCP1807**	ATE	
318d Touring 2.0	105	06/07 →	**FCP4191**	ATE				
318d Touring 2.0	105	06/07 →				**FCP1807**	ATE	
320d xDrive Touring 2.0	130	09/08 →	**FCP4191**	ATE				
320d xDrive Touring 2.0	130	09/08 →				**FCP1807**	ATE	
320i Touring 2.0	115	06/07 →	**FCP4191**	ATE				
320i Touring 2.0	115	06/07 →				**FCP1807**	ATE	
320i Touring 2.0	120	06/07 →	**FCP4191**	ATE				
320i Touring 2.0	120	06/07 → 12/11	**FCP4191**	ATE				
320i Touring 2.0	120	06/07 →				**FCP1807**	ATE	
320i Touring 2.0	120	06/07 → 12/11				**FCP1807**	ATE	
323i Touring 2.5	130	04/06 → 06/07	**FCP4191**	ATE				
323i Touring 2.5	130	04/06 → 06/07				**FCP1807**	ATE	
325d Touring 3.0	150	04/10 →	**FCP1773**	ATE				
325d Touring 3.0	150	04/10 →				**FCP1808**	ATE	
325i Touring 2.5	160	12/04 → 07/07	**FCP1773**	ATE				
325i Touring 2.5	160	12/04 → 12/10				**FCP1807**	ATE	
325i Touring 2.5	160	12/04 → 12/10				**FCP1808**	ATE	For increased payload
325i Touring 2.5	160	08/07 → 12/10	**FCP4191**	ATE				
325i Touring 2.5 Xi	160	09/05 → 08/11	**FCP1773**	ATE				
325i Touring 2.5 Xi	160	09/05 → 08/11	**FCP4191**	ATE	For vehicles without increased axle load			
325i Touring 2.5 Xi	160	09/05 → 08/11				**FCP1807**	ATE	
325i Touring 2.5 Xi	160	09/05 → 08/11				**FCP1808**	ATE	For increased payload
325i Touring 3.0	155	06/07 →	**FCP4191**	ATE				
325i Touring 3.0	155	06/07 →				**FCP1807**	ATE	
325i Touring 3.0	160	06/07 → 06/12	**FCP4191**	ATE				
325i Touring 3.0	160	06/07 → 06/12				**FCP1807**	ATE	
325i xDrive Touring 3.0	160	09/08 →	**FCP1773**	ATE				
325i xDrive Touring 3.0	160	09/08 →	**FCP4191**	ATE				
325i xDrive Touring 3.0	160	09/08 →				**FCP1807**	ATE	
325i xDrive Touring 3.0	160	09/08 →				**FCP1808**	ATE	
330d Touring 3.0	180	09/09 →	**FCP1773**	ATE				
330d Touring 3.0	180	09/09 →				**FCP1808**	ATE	

For material availability see page 16-18 / Per la disponibilità materiali vedere a pagina 16-18

FERODO RACING
Updated on November 2020

...BMW

	kW				NOTE			NOTE
...3 (E91)								
330d xDrive Touring 3.0	180	09/08 →	**FCP1773**	ATE				
330d xDrive Touring 3.0	180	09/08 →				**FCP1808**	ATE	
330i Touring 3.0	190	09/05 →	**FCP1628**	ATE				
330i Touring 3.0	190	11/05 →	**FCP1773**	ATE				
330i Touring 3.0	190	11/05 →				**FCP1808**	ATE	
330i Touring 3.0 Xi	190	09/05 →	**FCP1628**	ATE				
330i Touring 3.0 Xi	190	10/05 → 08/07	**FCP1773**	ATE				
330i Touring 3.0 Xi	190	10/05 → 08/07				**FCP1808**	ATE	
330i xDrive Touring 3.0	200	09/08 →	**FCP1773**	ATE				
330i xDrive Touring 3.0	200	09/08 →				**FCP1808**	ATE	
3 (E92)								
320d Coupe 2.0	130	02/07 → 12/11	**FCP4191**	ATE				
320d Coupe 2.0	130	02/07 → 12/11				**FCP1807**	ATE	
320d Coupe 2.0	135	03/10 →	**FCP4191**	ATE				
320d Coupe 2.0	135	03/10 →				**FCP1807**	ATE	
320d Coupe 2.0 Xd	130	03/07 → 08/08	**FCP4191**	ATE				
320d Coupe 2.0 Xd	130	03/07 → 08/08				**FCP1807**	ATE	
320d xDrive Coupe 2.0	120	09/08 →	**FCP4191**	ATE				
320d xDrive Coupe 2.0	120	09/08 →				**FCP1807**	ATE	
320d xDrive Coupe 2.0	130	09/08 → 07/11	**FCP4191**	ATE				
320d xDrive Coupe 2.0	130	09/08 → 07/11				**FCP1807**	ATE	
320d xDrive Coupe 2.0	135	03/10 →	**FCP4191**	ATE				
320d xDrive Coupe 2.0	135	03/10 →				**FCP1807**	ATE	
323i Coupe 2.5	130	10/07 → 08/08	**FCP4191**	ATE				
323i Coupe 2.5	130	10/07 → 08/08				**FCP1807**	ATE	
325d Coupe 3.0	145	09/06 → 03/10	**FCP1773**	ATE				
325d Coupe 3.0	145	09/06 → 03/10				**FCP1808**	ATE	
325d Coupe 3.0	150	04/10 →	**FCP1773**	ATE				
325d Coupe 3.0	150	04/10 →	**FCP4218**	BREMBO	Sports package			
325d Coupe 3.0	150	04/10 →				**FCP1808**	ATE	
325i Coupe 2.5 Xi	160	09/06 →	**FCP1773**	ATE				
325i Coupe 2.5 Xi	160	09/06 →				**FCP1807**	ATE	
325i Coupe 2.5 Xi	160	10/07 → 09/08	**FCP4191**	ATE				
325i Coupe 2.5 Xi	160	10/07 → 09/08				**FCP1807**	ATE	
325i xDrive Coupe 2.5	160	03/10 →	**FCP4191**	ATE				
325i xDrive Coupe 2.5	160	03/10 →				**FCP1807**	ATE	
330d Coupe 3.0	180	09/08 →	**FCP1773**	ATE				
330d Coupe 3.0	180	09/08 →				**FCP1808**	ATE	
330d xDrive Coupe 3.0	180	09/08 →	**FCP1773**	ATE				
330d xDrive Coupe 3.0	180	09/08 →				**FCP1808**	ATE	
330i Coupe 3.0	190	08/06 →	**FCP1773**	ATE				
330i Coupe 3.0	190	08/06 →				**FCP1808**	ATE	
330i Coupe 3.0	190	09/06 →	**FCP1773**	ATE				
330i Coupe 3.0 Xi	190	08/06 → 09/08	**FCP1773**	ATE				
330i Coupe 3.0 Xi	190	08/06 → 09/08				**FCP1808**	ATE	
330i Coupe 3.0 Xi	190	09/06 →	**FCP1773**	ATE				
330i xDrive Coupe 3.0	200	09/08 →	**FCP1773**	ATE				
330i xDrive Coupe 3.0	200	09/08 →				**FCP1808**	ATE	
335d Coupe 3.0	210	09/06 →				**FCP1808**	ATE	
All 3 Coupe M3	309	03/07 →	**FCP1628**	ATE				
All 3 Coupe M3	309	03/07 →				**FCP1672**	ATE	
3 (E93)								
320d Cabrio 2.0	120	01/08 → 02/10	**FCP4191**	ATE				
320d Cabrio 2.0	120	01/08 → 02/10				**FCP1807**	ATE	
320d Cabrio 2.0	130	08/06 → 12/11	**FCP4191**	ATE				
320d Cabrio 2.0	130	08/06 → 12/11				**FCP1807**	ATE	
320d Cabrio 2.0	135	03/10 →	**FCP4191**	ATE				
320d Cabrio 2.0	135	03/10 →				**FCP1807**	ATE	
320i Cabrio 2.0	110	08/06 → 08/07	**FCP4191**	ATE				
320i Cabrio 2.0	110	08/06 → 08/07				**FCP1807**	ATE	
320i Cabrio 2.0	115	07/07 →	**FCP4191**	ATE				
320i Cabrio 2.0	115	07/07 →				**FCP1807**	ATE	
320i Cabrio 2.0	120	07/07 → 03/10	**FCP4191**	ATE				
320i Cabrio 2.0	120	07/07 → 03/10				**FCP1807**	ATE	
320i Cabrio 2.0	125	03/07 →	**FCP4191**	ATE				
320i Cabrio 2.0	125	03/07 →				**FCP1807**	ATE	
325d Cabrio 3.0	145	07/07 → 02/10	**FCP1773**	ATE				
325d Cabrio 3.0	145	07/07 → 02/10	**FCP4218**	BREMBO	Sports package			
325d Cabrio 3.0	145	07/07 → 02/10				**FCP1808**	ATE	
325i Cabrio 2.5	160	08/06 →	**FCP4191**	ATE				
325i Cabrio 2.5	160	08/06 →				**FCP1807**	ATE	
330d Cabrio 3.0	180	01/09 →	**FCP1773**	ATE				
330d Cabrio 3.0	180	01/09 →				**FCP1808**	ATE	
330i Cabrio 3.0	200	10/09 →	**FCP1773**	ATE				
330i Cabrio 3.0	200	10/09 →				**FCP1808**	ATE	

For material availability see page 16-18 / Per la disponibilità materiali vedere a pagina 16-18

...BMW

3 (F30, F35, F80)

	kW				NOTE			NOTE
325Li	225	07/12 →	FCP4611	Brembo	For vehicles with sports package			
335 i	240	10/11 → 07/13	FCP4611	BREMBO	For Vehicles with Sport package			
335 i	250	07/13 →	FCP4611	BREMBO	For Vehicles with Sport package			
335 i xDrive	240	10/11 → 07/13	FCP4611	BREMBO	For Vehicles with Sport package			
335 i xDrive	250	07/13 →	FCP4611	BREMBO	For Vehicles with Sport package			
340 i	265	10/15 →	FCP4611	BREMBO				
340 i xDrive	265	10/15 →	FCP4611	BREMBO				
M3	317	01/14 →	FCP4611	BREMBO	For vehicles without ceramic discs			
M3	317	01/14 →				FCP4663	BREMBO	For vehicles without ceramic discs

3 (F30, F80)

316 d	85	02/12 →	FCP4611	Brembo	For vehicles with sports package			
316 d	85	02/12 →	FCP4489	BOSCH				
316 d	85	02/12 →				FCP4663	Brembo	For vehicles with sports package
316 i	100	10/12 →	FCP4611	Brembo	For vehicles with sports package			
316 i	100	10/12 →	FCP4489	BOSCH				
316 i	100	10/12 →				FCP4663	Brembo	For vehicles with sports package
318 d	100	02/12 →	FCP4611	Brembo	For vehicles with sports package			
318 d	100	02/12 →	FCP4489	BOSCH				
318 d	100	02/12 →				FCP4663	BREMBO	For vehicles with sports package
318 d	105	02/12 →	FCP4611	Brembo	For vehicles with sports package			
318 d	105	02/12 →	FCP4489	BOSCH				
318 d	105	02/12 →				FCP4663	Brembo	For vehicles with sports package
318 d	110	07/15 →	FCP4489	BOSCH				
318 d xDrive	105	11/12 →	FCP4611	Brembo	For vehicles with sports package			
318 d xDrive	105	11/12 →	FCP4489	BOSCH				
318 d xDrive	105	11/12 →				FCP4663	Brembo	For vehicles with sports package
318 d xDrive	110	07/15 →	FCP4489	BOSCH				
318 i	100	07/15 →	FCP4489	BOSCH				
320 d	135	10/11 →	FCP4611	Brembo	For vehicles with sports package			
320 d	135	10/11 → 07/15	FCP4394	BOSCH				
320 d	135	10/11 → 07/15	FCP4489	BOSCH				
320 d	135	10/11 →				FCP4663	Brembo	For vehicles with sports package
320 d	140	07/15 →	FCP4489	BOSCH				
320 d Efficient Dynamics	120	10/11 →	FCP4611	Brembo	For vehicles with sports package			
320 d Efficient Dynamics	120	10/11 →	FCP4394	BOSCH				
320 d Efficient Dynamics	120	10/11 →	FCP4489	BOSCH				
320 d Efficient Dynamics	120	10/11 →				FCP4663	Brembo	For vehicles with sports package
320 d xDrive	120	05/12 →	FCP4611	Brembo	For vehicles with sports package			
320 d xDrive	120	05/12 →	FCP4394	BOSCH				
320 d xDrive	120	05/12 →				FCP4663	BREMBO	For vehicles with sports package
320 d xDrive	135	10/11 → 07/15	FCP4611	Brembo	For vehicles with sports package			
320 d xDrive	135	10/11 → 07/15	FCP4394	BOSCH				
320 d xDrive	135	10/11 → 07/15	FCP4489	BOSCH				
320 d xDrive	135	10/11 → 07/15				FCP4663	Brembo	For vehicles with sports package
320 d xDrive	140	07/15 →	FCP4489	BOSCH				
320 i	135	02/12 →	FCP4611	Brembo	For vehicles with sports package			
320 i	135	02/12 →	FCP4394	BOSCH				
320 i	135	02/12 →	FCP4489	BOSCH				
320 i	135	02/12 →				FCP4663	Brembo	For vehicles with sports package
320 i	135	07/15 →	FCP4489	BOSCH				
320 i Efficient Dynamics	125	02/12 →	FCP4611	Brembo	For vehicles with sports package			
320 i Efficient Dynamics	125	02/12 →	FCP4489	BOSCH				
320 i Efficient Dynamics	125	02/12 →				FCP4663	Brembo	For vehicles with sports package
320 i xDrive	135	11/11 →	FCP4611	Brembo	For vehicles with sports package			
320 i xDrive	135	11/11 →	FCP4394	BOSCH				
320 i xDrive	135	11/11 →	FCP4489	BOSCH				
320 i xDrive	135	11/11 →				FCP4663	Brembo	For vehicles with sports package
320 i xDrive	135	07/15 →	FCP4489	BOSCH				
325 d	155	10/11 →	FCP4611	BREMBO	For Vehicles with Sport package			
325 d	155	10/11 →	FCP4394	BOSCH				
325 d	160	10/11 →	FCP4611	Brembo	For vehicles with sports package			
325 d	160	10/11 →	FCP4394	BOSCH				
325 d	160	10/11 →	FCP4489	BOSCH				
325 d	160	10/11 →				FCP4663	Brembo	For vehicles with sports package
328 i	180	10/11 →	FCP4611	Brembo	For vehicles with sports package			
328 i	180	10/11 →	FCP4394	BOSCH				
328 i	180	10/11 →	FCP4489	BOSCH				
328 i	180	10/11 →				FCP4663	Brembo	For vehicles with sports package
328 i xDrive	180	10/11 →	FCP4611	Brembo	For vehicles with sports package			
328 i xDrive	180	10/11 →	FCP4394	BOSCH				
328 i xDrive	180	10/11 →	FCP4489	BOSCH				
328 i xDrive	180	10/11 →				FCP4663	Brembo	For vehicles with sports package
330 d	190	01/12 →	FCP4611	Brembo	For vehicles with sports package			
330 d	190	01/12 →	FCP4394	BOSCH				
330 d	190	01/12 →	FCP4489	BOSCH				
330 d	190	01/12 →				FCP4663	Brembo	For vehicles with sports package

For material availability see page 16-18 / Per la disponibilità materiali vedere a pagina 16-18

FERODO RACING
Updated on November 2020

...BMW

	kW				NOTE			NOTE
...3 (F30, F80)								
330 d	210	09/15 →	**FCP4611**	BREMBO	For Vehicles with Sport package			
330 d	210	09/15 →	**FCP4394**	BOSCH				
330 d xDrive	190	03/13 →	**FCP4611**	Brembo	For vehicles with sports package			
330 d xDrive	190	03/13 →	**FCP4394**	BOSCH				
330 d xDrive	190	03/13 →	**FCP4489**	BOSCH				
330 d xDrive	190	03/13 →				**FCP4663**	Brembo	For vehicles with sports package
330 d xDrive	210	09/15 →	**FCP4394**	BOSCH				
330 e	185	01/16 →	**FCP4394**	BOSCH				
335 d xDrive	230	07/13 →	**FCP4611**	Brembo	For vehicles with sports package			
335 d xDrive	230	07/13 →	**FCP4489**	BOSCH				
335 d xDrive	230	07/13 →				**FCP4663**	Brembo	For vehicles with sports package
335 i	225	10/11 →	**FCP4611**	Brembo	For vehicles with sports package			
335 i	225	10/11 →	**FCP4489**	BOSCH				
335 i	225	10/11 →				**FCP4663**	Brembo	For vehicles with sports package
335 i xDrive	225	10/11 →	**FCP4611**	Brembo	For vehicles with sports package			
335 i xDrive	225	10/11 →	**FCP4489**	BOSCH				
335 i xDrive	225	10/11 →				**FCP4663**	Brembo	For vehicles with sports package
ActiveHybrid	225	07/12 →	**FCP4611**	Brembo	For vehicles with sports package			
ActiveHybrid	225	07/12 →	**FCP4489**	BOSCH				
ActiveHybrid	225	07/12 →				**FCP4663**	Brembo	For vehicles with sports package
ActiveHybrid	250	01/12 →	**FCP4611**	Brembo	For vehicles with sports package			
ActiveHybrid	250	01/12 →	**FCP4489**	BOSCH				
ActiveHybrid	250	01/12 →				**FCP4663**	Brembo	For vehicles with sports package
3 (F30,F80)								
M3	331	03/16 →	**FCP4611**	BREMBO	For vehicles without ceramic discs			
M3	331	03/16 →				**FCP4663**	TEVES	For vehicles without ceramic discs
3 (G20)								
318d	100	03/19 →	**FCP4489**	BREMBO	without M package			
318d	100	03/19 →	**FCP5055**	BREMBO	Disc Diam mm:348,vehicles with M-sport package			
318d	110	03/19 →	**FCP4489**	BREMBO	without M package			
318d	110	03/19 →	**FCP5055**	BREMBO	For vehicles with M-sport package			
320d	120	11/18 →	**FCP5055**	BREMBO	For vehicles with M-sport package			
320d	140	11/18 →	**FCP5055**	BREMBO	For vehicles with M-sport package			
320d xDrive	120	11/18 →	**FCP5055**	BREMBO	For vehicles with M-sport package			
320d xDrive	140	11/18 →	**FCP5055**	BREMBO	For vehicles with M-sport package			
320i	125	03/19 →	**FCP5055**	BREMBO	Disc Diam mm:348,vehicles with M-sport package			
320i	135	03/19 →	**FCP5055**	BREMBO	For vehicles with M-sport package			
330d	195	03/19 →	**FCP5055**	BREMBO	Disc Diam mm:348,vehicles with M-sport package			
330d xDrive	195	07/19 →	**FCP5055**	BREMBO	Disc Diam mm:348,vehicles with M-sport package			
330i	190	11/18 →	**FCP5055**	BREMBO	For vehicles with M-sport package			
330i xDrive	190	07/19 →	**FCP5055**	BREMBO	Disc Diam mm:348,vehicles with M-sport package			
3 Compact (E36)								
318Ti	103	11/94 → 08/00	**FCP725**	ATE				
318Ti	103	11/94 → 08/00				**FCP850**	ATE	
323Ti	125	05/97 → 08/00	**FCP725**	ATE				
323Ti	125	05/97 → 08/00				**FCP850**	ATE	
3 Compact (E46)								
318Ti	105	03/93 → 02/05	**FCP725**	ATE				
318Ti	105	03/93 → 02/05				**FCP1301**	ATE	
3 Convertible (E30)								
320 i	95	04/86 → 10/93	**FCP660**	LUCAS/TRW				
320 i	95	04/86 → 10/93				**FCP296**	ATE	
M3 2.3	143	06/88 → 06/91	**FCP256**	ATE				
M3 2.3	143	06/88 → 06/91				**FCP578**	ATE	
3 Convertible (E46)								
M3 3.2	252	04/01 → 12/07	**FCP779**	ATE				
M3 3.2	252	04/01 → 12/07				**FCP1483**	ATE	
3 Convertible (E93)								
325 i	155	10/06 →	**FCP1063**	LUCAS/TRW				
330 i	190	03/07 →	**FCP1063**	LUCAS/TRW				
335 i	225	03/07 →	**FCP1628**	ATE				
335 i	225	03/07 →				**FCP1808**	ATE	
3 Coupe (E46)								
318Ci	87, 105	11/99 →	**FCP1300**	ATE				
318Ci	87, 105	11/99 →				**FCP1301**	ATE	
320Ci /323Ci	110, 125	04/99 →	**FCP1300**	ATE				
320Ci /323Ci	110, 125	04/99 →				**FCP1301**	ATE	
325Ti	141	06/01 → 02/05	**FCP1300**	ATE				

For material availability see page 16-18 / Per la disponibilità materiali vedere a pagina 16-18

...BMW

		kW				NOTE				NOTE
...3 Coupe (E46)										
325Ti	141	06/01 → 02/05					FCP1301	ATE	
328i Coupe'	142	04/98 → 06/00	FCP1300	ATE					
328i Coupe'	142	04/98 → 06/00					FCP1301	ATE	
330Cd	150	03/03 →	FCP1073	ATE					
330Cd	150	03/03 →					FCP1483	ATE	
330Ci	170	06/00 →					FCP1483	ATE	
3 Coupe (E92)										
325i	160	09/06 →	FCP1773	ATE					
325i	160	09/06 →					FCP1807	ATE	
330i	200	09/06 →	FCP1773	ATE					
330i	200	03/07 →	FCP4218	BREMBO					
330i	200	03/07 →					FCP1808	ATE	
330i	200	10/09 →	FCP1773	ATE					
330i	200	10/09 →					FCP1808	ATE	
330xi	200	09/06 →	FCP1773	ATE					
330xi	200	03/07 → 08/09	FCP1773	ATE					
330xi	200	03/07 → 08/09					FCP1808	ATE	
335 i	225	11/05 → 12/12	FCP1628	ATE					
335 i	225	11/05 → 12/12					FCP1808	ATE	
3 Gran Turismo (F34)										
318 d	100	03/13 →	FCP4489	BOSCH					
318 d	105	03/13 →	FCP4611	Brembo	For vehicles with sports package				
318 d	105	03/13 →	FCP4489	BOSCH					
318 d	105	03/13 →					FCP4663	Brembo	For vehicles with sports package
318 d	110	07/15 →	FCP4489	BOSCH					
320 d	120	03/13 →	FCP4394	BOSCH					
320 d	135	03/13 →	FCP4611	Brembo	For vehicles with sports package				
320 d	135	03/13 → 07/15	FCP4394	BOSCH					
320 d	135	03/13 → 07/15	FCP4489	BOSCH					
320 d	135	03/13 →					FCP4663	Brembo	For vehicles with sports package
320 d xDrive	120	03/13 →	FCP4394	BOSCH					
320 d xDrive	135	03/13 →	FCP4611	Brembo	For vehicles with sports package				
320 d xDrive	135	03/13 → 07/15	FCP4394	BOSCH					
320 d xDrive	135	03/13 → 07/15	FCP4489	BOSCH					
320 d xDrive	135	03/13 →					FCP4663	Brembo	For vehicles with sports package
320 d xDrive	140	07/15 →	FCP4394	BOSCH					
320 d xDrive	147	05/13 →	FCP4611	Brembo	For vehicles with sports package				
320 d xDrive	147	05/13 →					FCP4663	Brembo	For vehicles with sports package
320 i	120	03/13 →	FCP4489	BOSCH					
320 i	135	03/13 →	FCP4611	Brembo	For vehicles with sports package				
320 i	135	03/13 →	FCP4489	BOSCH					
320 i	135	03/13 →					FCP4663	Brembo	For vehicles with sports package
320 i xDrive	120	03/13 →	FCP4489	BOSCH					
320 i xDrive	135	03/13 →	FCP4611	Brembo	For vehicles with sports package				
320 i xDrive	135	03/13 →	FCP4489	BOSCH					
320 i xDrive	135	03/13 →					FCP4663	Brembo	For vehicles with sports package
325 d	155	07/13 →	FCP4611	BREMBO	For Vehicles with Sport package				
325 d	155	07/13 →	FCP4394	BOSCH					
325 d	160	03/13 →	FCP4611	Brembo	For vehicles with sports package				
325 d	160	03/13 →	FCP4394	BOSCH					
325 d	160	03/13 →					FCP4663	Brembo	For vehicles with sports package
328 i	180	03/13 →	FCP4611	Brembo	For vehicles with sports package				
328 i	180	03/13 →	FCP4394	BOSCH					
328 i	180	03/13 →					FCP4663	Brembo	For vehicles with sports package
328 i xDrive	180	03/13 →	FCP4611	Brembo	For vehicles with sports package				
328 i xDrive	180	03/13 →	FCP4394	BOSCH					
328 i xDrive	180	03/13 →					FCP4663	Brembo	For vehicles with sports package
330 d	190	01/14 →	FCP4611	BREMBO	For Vehicles with Sport package				
330 d	190	01/14 →	FCP4394	BOSCH					
330 d	210	09/15 →	FCP4611	BREMBO	For Vehicles with Sport package				
330 d	210	09/15 →	FCP4394	BOSCH					
330 d xDrive	190	01/14 →	FCP4611	BREMBO	For Vehicles with Sport package				
330 d xDrive	190	01/14 →	FCP4394	BOSCH					
330 d xDrive	210	09/15 →	FCP4394	BOSCH					
335 d xDrive	230	01/14 →	FCP4611	Brembo	For vehicles with sports package				
335 d xDrive	230	01/14 →					FCP4663	BREMBO	For vehicles with sports package
335 i	225	03/13 →	FCP4611	Brembo	For vehicles with sports package				
335 i	225	03/13 →	FCP4489	BOSCH					
335 i	225	03/13 →					FCP4663	Brembo	For vehicles with sports package
335 i	240	03/13 → 03/14	FCP4611	BREMBO	For Vehicles with Sport package				
335 i	250	07/13 →	FCP4611	BREMBO					
335 i xDrive	225	03/13 →	FCP4611	Brembo	For vehicles with sports package				
335 i xDrive	225	03/13 →	FCP4489	BOSCH					
335 i xDrive	225	03/13 →					FCP4663	Brembo	For vehicles with sports package
335 i xDrive	240	03/13 → 03/14	FCP4611	BREMBO					

For material availability see page 16-18 / Per la disponibilità materiali vedere a pagina 16-18



kW

...BMW

					NOTE			NOTE
...3 Gran Turismo (F34)								
335 i xDrive	250	03/14 →	**FCP4611**	BREMBO				
3 Saloon (E90)								
318d	100	07/07 → 12/11	**FCP1773**	ATE				
318d	100	07/07 → 12/11				**FCP1807**	ATE	Susp. Sport
318d	105	09/05 → 12/11	**FCP1751**	ATE				
318d	105	09/05 → 12/11				**FCP1807**	ATE	
318i	95	09/05 → 03/07	**FCP1751**	ATE				
318i	95	09/05 → 03/07				**FCP1806**	ATE	
318i	95	09/07 → 12/11	**FCP1773**	ATE				
318i	95	09/07 → 12/11				**FCP1807**	ATE	Susp. Sport
320d	120	01/05 →	**FCP1773**	ATE				
320d	120	01/05 →				**FCP1807**	ATE	
320d	120	03/07 →	**FCP4191**	ATE				
320d	120	03/07 →				**FCP1807**	ATE	
320i	110	01/05 → 03/07	**FCP1751**	ATE				
320i	110	01/05 → 03/07				**FCP1806**	ATE	
320i	115	03/07 → 12/11	**FCP1773**	ATE				
320i	115	03/07 → 12/11				**FCP1807**	ATE	Susp. Sport
320i	125	03/07 → 12/11	**FCP1773**	ATE				
320i	125	03/07 → 12/11				**FCP1807**	ATE	Susp. Sport
320si	127	05/06 →	**FCP1773**	ATE				
320si	127	05/06 →				**FCP1807**	ATE	
325d	145	09/06 →	**FCP1773**	ATE				
325d	145	09/06 →	**FCP1773**	ATE				
325d	145	09/06 →	**FCP4218**	BREMBO				
325d	145	09/06 →				**FCP1807**	ATE	
325d	145	09/06 →				**FCP1808**	ATE	
325i	160	01/05 → 12/11	**FCP1773**	ATE				
325i	160	01/05 → 12/11				**FCP1807**	ATE	
325i	160	06/07 → 12/11	**FCP4191**	ATE				
325i	160	06/07 → 12/11				**FCP1807**	ATE	
330i	200	03/07 → 08/08	**FCP1773**	ATE				
330i	200	03/07 → 08/08				**FCP1808**	ATE	
330i	200	09/07 → 12/11	**FCP1773**	ATE				
330xd	170	03/05 → 09/07	**FCP1773**	ATE				
330xd	170	03/05 → 09/07				**FCP1808**	ATE	
330xd	170	09/05 → 12/11	**FCP1773**	ATE				
330xi	200	09/07 → 12/11	**FCP1773**	ATE				
3 Touring (E30)								
320 i	95	01/88 → 12/91	**FCP660**	LUCAS/TRW				
320 i	95	01/88 → 12/91				**FCP296**	ATE	
3 Touring (E46)								
318i Touring	87, 105	04/99 →	**FCP1300**	ATE				
318i Touring	87, 105	04/99 →				**FCP1301**	ATE	
320i Touring	110	10/99 →	**FCP1300**	ATE				
320i Touring	110	10/99 →				**FCP1301**	ATE	
320Tdi Touring	110	10/99 →	**FCP1300**	ATE				
320Tdi Touring	110	10/99 →				**FCP1301**	ATE	
328i Touring	142	10/99 → 06/00	**FCP1300**	ATE				
328i Touring	142	10/99 → 06/00				**FCP1301**	ATE	
330 d	150	03/03 → 02/05	**FCP1073**	ATE				
330 d	150	03/03 → 02/05				**FCP1483**	ATE	
330 d, 330 xd	135	10/99 →	**FCP1073**	ATE				
330 d, 330 xd	135	10/99 →				**FCP1483**	ATE	
330 i	170	06/00 → 02/05	**FCP1073**	ATE				
330 i	170	06/00 → 02/05				**FCP1483**	ATE	
330 xi	170	06/00 → 02/05	**FCP1073**	ATE				
330 xi	170	06/00 → 02/05				**FCP1483**	ATE	
3 Touring (E91)								
318d	90	09/05 →	**FCP1773**	ATE				
318d	90	09/05 →				**FCP1807**	ATE	
318i	95	01/06 →	**FCP1773**	ATE				
318i	95	01/06 →				**FCP1807**	ATE	
320d	120	01/05 →	**FCP1773**	ATE				
320d	120	01/05 →				**FCP1807**	ATE	
320i	110	01/05 →	**FCP1773**	ATE				
320i	110	01/05 →				**FCP1807**	ATE	
320i	110	07/07 →	**FCP4191**	ATE				
320i	110	07/07 →				**FCP1807**	ATE	
325d	145	09/06 →	**FCP1773**	ATE				
325d	145	09/06 →	**FCP1773**	ATE				
325d	145	09/06 →				**FCP1807**	ATE	
325d	145	09/06 →				**FCP1808**	ATE	

For material availability see page 16-18 / Per la disponibilità materiali vedere a pagina 16-18

...BMW

...3 Touring (E91)

	kW								
330d	170	09/05 →	FCP1628	ATE					
330i	200	09/07 →	FCP1628	ATE					
330i	200	09/07 →	FCP1773	ATE					
330i	200	09/07 →				FCP1808	ATE		
330xd	170	06/05 → 09/07	FCP1773	ATE					
330xd	170	06/05 → 09/07				FCP1808	ATE		
330xd	170	09/05 →	FCP1628	ATE					
330xi	200	09/07 →	FCP1628	ATE					
335d	210	09/06 →	FCP1628	ATE					
335i	225	09/06 →	FCP1628	ATE					
335i	225	09/06 →				FCP1808	ATE		

3 Touring (F31)

316 d	85	06/12 →	FCP4611	Brembo	For vehicles with sports package			
316 d	85	06/12 →	FCP4489	BOSCH				
316 d	85	06/12 →				FCP4663	Brembo	For vehicles with sports package
316 i	100	03/13 →	FCP4611	Brembo	For vehicles with sports package			
316 i	100	03/13 →	FCP4489	BOSCH				
316 i	100	03/13 →				FCP4663	Brembo	For vehicles with sports package
318 d	100	06/12 →	FCP4489	BOSCH				
318 d	105	06/12 →	FCP4611	Brembo	For vehicles with sports package			
318 d	105	06/12 →	FCP4489	BOSCH				
318 d	105	06/12 →				FCP4663	Brembo	For vehicles with sports package
318 d	110	07/15 →	FCP4489	BOSCH				
318 d xDrive	105	01/13 →	FCP4611	Brembo	For vehicles with sports package			
318 d xDrive	105	01/13 →	FCP4489	BOSCH				
318 d xDrive	105	01/13 →				FCP4663	Brembo	For vehicles with sports package
318 d xDrive	110	07/15 →	FCP4489	BOSCH				
318 i	100	07/15 →	FCP4489	BOSCH				
320 d	120	06/12 →	FCP4611	Brembo	For vehicles with sports package			
320 d	120	06/12 →	FCP4394	BOSCH				
320 d	120	06/12 →	FCP4489	BOSCH				
320 d	120	06/12 →				FCP4663	Brembo	For vehicles with sports package
320 d	135	06/12 →	FCP4611	Brembo	For vehicles with sports package			
320 d	135	06/12 → 07/15	FCP4394	BOSCH				
320 d	135	06/12 →				FCP4663	Brembo	For vehicles with sports package
320 d xDrive	120	06/12 →	FCP4394	BOSCH				
320 d xDrive	135	06/12 →	FCP4611	Brembo	For vehicles with sports package			
320 d xDrive	135	06/12 → 07/15	FCP4394	BOSCH				
320 d xDrive	135	06/12 → 07/15	FCP4489	BOSCH				
320 d xDrive	135	06/12 →				FCP4663	Brembo	For vehicles with sports package
320 d xDrive	140	07/15 →	FCP4489	BOSCH				
320 i	135	06/12 →	FCP4611	Brembo	For vehicles with sports package			
320 i	135	06/12 →	FCP4394	BOSCH				
320 i	135	06/12 →	FCP4489	BOSCH				
320 i	135	06/12 →				FCP4663	Brembo	For vehicles with sports package
320 i	135	07/15 →	FCP4489	BOSCH				
320 i xDrive	135	06/12 →	FCP4611	Brembo	For vehicles with sports package			
320 i xDrive	135	06/12 →	FCP4394	BOSCH				
320 i xDrive	135	06/12 →	FCP4489	BOSCH				
320 i xDrive	135	06/12 →				FCP4663	Brembo	For vehicles with sports package
320 i xDrive	135	07/15 →	FCP4489	BOSCH				
325 d	155	03/13 →	FCP4611	BREMBO	For Vehicles with Sport package			
325 d	155	03/13 →	FCP4394	BOSCH				
325 d	160	03/13 →	FCP4611	Brembo	For vehicles with sports package			
325 d	160	03/13 →	FCP4394	BOSCH				
325 d	160	03/13 →	FCP4489	BOSCH				
325 d	160	03/13 →				FCP4663	Brembo	For vehicles with sports package
328 i	180	06/12 →	FCP4611	Brembo	For vehicles with sports package			
328 i	180	06/12 →	FCP4394	BOSCH				
328 i	180	06/12 →	FCP4489	BOSCH				
328 i	180	06/12 →				FCP4663	Brembo	For vehicles with sports package
328 i xDrive	180	06/12 →	FCP4611	Brembo	For vehicles with sports package			
328 i xDrive	180	06/12 →	FCP4394	BOSCH				
328 i xDrive	180	06/12 →	FCP4489	BOSCH				
328 i xDrive	180	06/12 →				FCP4663	Brembo	For vehicles with sports package
330 d	190	06/12 →	FCP4611	Brembo	For vehicles with sports package			
330 d	190	06/12 →	FCP4394	BOSCH				
330 d	190	06/12 →	FCP4489	BOSCH				
330 d	190	06/12 →				FCP4663	Brembo	For vehicles with sports package
330 d	210	09/15 →	FCP4611	BREMBO	For Vehicles with Sport package			
330 d	210	09/15 →	FCP4394	BOSCH				
330 d xDrive	190	06/12 →	FCP4611	Brembo	For vehicles with sports package			
330 d xDrive	190	06/12 →	FCP4394	BOSCH				
330 d xDrive	190	06/12 →	FCP4489	BOSCH				
330 d xDrive	190	06/12 →				FCP4663	Brembo	For vehicles with sports package
330 d xDrive	210	09/15 →	FCP4394	BOSCH				

For material availability see page 16-18 / Per la disponibilità materiali vedere a pagina 16-18

FERODO RACING
Updated on November 2020

...BMW

	kW				NOTE			NOTE
...3 Touring (F31)								
335 d xDrive	230	09/13 →	FCP4611	Brembo	For vehicles with sports package			
335 d xDrive	230	09/13 →	FCP4489	BOSCH				
335 d xDrive	230	09/13 →				FCP4663	BREMBO	For vehicles with sports package
335 i	225	03/13 →	FCP4611	Brembo	For vehicles with sports package			
335 i	225	03/13 →	FCP4489	BOSCH				
335 i	225	03/13 →				FCP4663	Brembo	For vehicles with sports package
335 i	240	01/12 → 07/13	FCP4611	BREMBO	For Vehicles with Sport package			
335 i	250	07/13 →	FCP4611	BREMBO	For Vehicles with Sport package			
335 i xDrive	225	03/13 →	FCP4611	Brembo	For vehicles with sports package			
335 i xDrive	225	03/13 →	FCP4489	BOSCH				
335 i xDrive	225	03/13 →				FCP4663	Brembo	For vehicles with sports package
335 i xDrive	240	01/12 → 07/13	FCP4611	BREMBO	For Vehicles with Sport package			
335 i xDrive	250	07/13 →	FCP4611	BREMBO	For Vehicles with Sport package			
340 i	265	07/15 →	FCP4611	BREMBO				
340 i xDrive	265	07/15 →	FCP4611	BREMBO				
4 Convertible (F33, F83)								
420 d	120	10/13 →	FCP4394	BOSCH				
420 d	135	10/13 →	FCP4611	Brembo	For vehicles with sports package			
420 d	135	10/13 → 07/15	FCP4394	BOSCH				
420 d	135	10/13 → 07/15	FCP4489	BOSCH				
420 d	135	10/13 →				FCP4663	BREMBO	For vehicles with sports package
420 i	120	07/14 →	FCP4489	BOSCH				
420 i	135	07/14 →	FCP4489	BOSCH				
425 d	155	07/14 →	FCP4611	BREMBO	For Vehicles with Sport package			
425 d	155	07/14 →	FCP4394	BOSCH				
425 d	160	07/14 →	FCP4611	BREMBO	For Vehicles with Sport package			
425 d	160	07/14 →	FCP4394	BOSCH				
428 i	180	10/13 →	FCP4611	BREMBO	For Vehicles with Sport package			
428 i	180	10/13 →	FCP4394	BOSCH				
428 i xDrive	180	01/14 →	FCP4611	BREMBO	For Vehicles with Sport package			
428 i xDrive	180	01/14 →	FCP4394	BOSCH				
430 d	190	07/14 →	FCP4611	BREMBO	For Vehicles with Sport package			
430 d	190	07/14 →	FCP4394	BOSCH				
435 d xDrive	230	07/14 →	FCP4611	BREMBO	For Vehicles with Sport package			
435 i	225	10/13 →	FCP4611	Brembo	For vehicles with sports package			
435 i	225	10/13 →	FCP4489	BOSCH				
435 i	225	10/13 →				FCP4663	BREMBO	For vehicles with sports package
435 i	250	10/13 →	FCP4611	BREMBO				
435 i xDrive	225	07/14 →	FCP4611	BREMBO	For Vehicles with Sport package			
M4	317	07/14 →	FCP4611	Brembo				
M4	317	07/14 →				FCP4663	BREMBO	
4 Coupe								
M4 GT4	317	01/18 →	FRP3150	AP RACING				
M4 GT4	317	01/18 →				FRP1078	AP RACING	
4 Coupe (F32, F82)								
418 d	100	03/15 →	FCP4489	BOSCH				
418 d	110	03/15 →	FCP4489	BOSCH				
420 d	120	07/13 →	FCP4394	BOSCH				
420 d	135	07/13 →	FCP4611	Brembo	For vehicles with sports package			
420 d	135	07/13 → 03/15	FCP4394	BOSCH				
420 d	135	07/13 → 03/15	FCP4489	BOSCH				
420 d	135	07/13 →				FCP4663	Brembo	For vehicles with sports package
420 d xDrive	120	11/13 →	FCP4394	BOSCH				
420 d xDrive	135	11/13 →	FCP4611	Brembo	For vehicles with sports package			
420 d xDrive	135	11/13 → 03/15	FCP4394	BOSCH				
420 d xDrive	135	11/13 → 03/15	FCP4489	BOSCH				
420 d xDrive	135	11/13 →				FCP4663	BREMBO	For vehicles with sports package
420 i	120	11/13 →	FCP4489	BOSCH				
420 i	135	11/13 →	FCP4611	Brembo	For vehicles with sports package			
420 i	135	11/13 →	FCP4489	BOSCH				
420 i	135	11/13 →				FCP4663	BREMBO	For vehicles with sports package
420 i xDrive	120	11/13 →	FCP4394	BOSCH				
420 i xDrive	120	11/13 →	FCP4489	BOSCH				
420 i xDrive	135	11/13 →	FCP4611	Brembo	For vehicles with sports package			
420 i xDrive	135	11/13 →	FCP4489	BOSCH				
420 i xDrive	135	11/13 →				FCP4663	BREMBO	For vehicles with sports package
425 d	155	01/14 →	FCP4611	BREMBO	For Vehicles with Sport package			
425 d	155	01/14 →	FCP4394	BOSCH				
425 d	160	01/14 →	FCP4611	BREMBO	For Vehicles with Sport package			
425 d	160	01/14 →	FCP4394	BOSCH				
428 i	180	07/13 →	FCP4611	Brembo	For vehicles with sports package			
428 i	180	07/13 →	FCP4394	BOSCH				
428 i	180	07/13 →				FCP4663	Brembo	For vehicles with sports package
428 i xDrive	180	07/13 →	FCP4611	Brembo	For vehicles with sports package			

For material availability see page 16-18 / Per la disponibilità materiali vedere a pagina 16-18

			kW								
...BMW						NOTE				NOTE
...4 Coupe (F32, F82)										
428 i xDrive	180	07/13 →		**FCP4394**	BOSCH					
428 i xDrive	180	07/13 →					**FCP4663**	Brembo	For vehicles with sports package
430 d	190	11/13 →		**FCP4611**	BREMBO	For Vehicles with Sport package			
430 d	190	11/13 →		**FCP4394**	BOSCH				
430 d	210	11/13 →		**FCP4611**	BREMBO				
430 d xDrive	190	01/14 →		**FCP4611**	BREMBO	For Vehicles with Sport package			
430 d xDrive	190	01/14 →		**FCP4394**	BOSCH				
430 d xDrive	210	11/13 →		**FCP4611**	BREMBO				
435 d xDrive	230	11/13 →		**FCP4611**	Brembo	For vehicles with sports package			
435 d xDrive	230	11/13 →		**FCP4489**	BOSCH				
435 d xDrive	230	11/13 →					**FCP4663**	BREMBO	For vehicles with sports package
435 i	225	07/13 →		**FCP4611**	Brembo	For vehicles with sports package			
435 i	225	07/13 →		**FCP4489**	BOSCH				
435 i	225	07/13 →					**FCP4663**	Brembo	For vehicles with sports package
435 i	250	07/13 →		**FCP4611**	BREMBO	For Vehicles with Sport package			
435 i xDrive	225	07/13 →		**FCP4611**	Brembo	For vehicles with sports package			
435 i xDrive	225	07/13 →		**FCP4489**	BOSCH				
435 i xDrive	225	07/13 →					**FCP4663**	Brembo	For vehicles with sports package
435 i xDrive	250	07/13 →		**FCP4611**	BREMBO	For Vehicles with Sport package			
M4	317	01/14 →		**FCP4611**	Brembo				
M4	317	01/14 →					**FCP4663**	Brembo	
4 Gran Coupe (F36)									
418 d	100	03/14 →		**FCP4489**	BOSCH				
418 d	105	03/14 →		**FCP4489**	BOSCH				
418 d	110	07/15 →		**FCP4489**	BOSCH				
418 i	100	07/15 →		**FCP4489**	BOSCH				
420 d	120	03/14 →		**FCP4394**	BOSCH				
420 d	135	03/14 →	03/15	**FCP4489**	BOSCH				
420 d xDrive	120	03/14 →		**FCP4394**	BOSCH				
420 d xDrive	135	03/14 →	03/15	**FCP4394**	BOSCH				
420 i	120	03/14 →		**FCP4489**	BOSCH				
420 i	135	03/14 →		**FCP4489**	BOSCH				
420 i xDrive	120	03/14 →		**FCP4489**	BOSCH				
420 i xDrive	135	07/14 →		**FCP4489**	BOSCH				
428 i	180	03/14 →		**FCP4611**	Brembo	For vehicles with sports package			
428 i	180	03/14 →		**FCP4394**	BOSCH				
428 i	180	03/14 →					**FCP4663**	Brembo	For vehicles with sports package
428 i xDrive	180	03/14 →		**FCP4611**	Brembo	For vehicles with sports package			
428 i xDrive	180	03/14 →		**FCP4394**	BOSCH				
428 i xDrive	180	03/14 →					**FCP4663**	Brembo	For vehicles with sports package
430 d	190	07/14 →		**FCP4611**	BREMBO	For Vehicles with Sport package			
430 d	190	07/14 →		**FCP4394**	BOSCH				
430 d xDrive	190	07/14 →		**FCP4611**	BREMBO	For Vehicles with Sport package			
430 d xDrive	190	07/14 →		**FCP4394**	BOSCH				
435 d xDrive	230	07/14 →		**FCP4611**	BREMBO	For Vehicles with Sport package			
435 i	225	03/14 →		**FCP4611**	Brembo	For vehicles with sports package			
435 i	225	03/14 →					**FCP4663**	Brembo	For vehicles with sports package
435 i	250	03/14 →		**FCP4611**	BREMBO				
435 i xDrive	225	07/14 →		**FCP4611**	Brembo	For vehicles with sports package			
435 i xDrive	225	07/14 →					**FCP4663**	Brembo	For vehicles with sports package
5 (E12)									
518i	66	07/76 →	07/81	**FCP399**	ATE				
520	85, 92	09/72 →	12/73	**FCP399**	ATE				
520	85, 92	07/76 →	07/81	**FCP399**	ATE				
525	110	08/76 →	05/81	**FCP399**	ATE				
525	110	08/76 →	05/81				**FCP3**	ATE	
528i	125	08/76 →	05/81	**FCP399**	ATE				
528i	125	08/76 →	05/81				**FCP3**	ATE	
530		08/76 →	05/81	**FCP399**	ATE				
530		08/76 →	05/81				**FCP3**	ATE	
530		06/81 →	05/88	**FCP399**	ATE				
530		06/81 →	05/88				**FCP2**	ATE	
5 (E28)									
3.5 24V M5	210	01/86 →	05/88	**FCP399**	ATE				
3.5 24V M5	210	01/86 →	05/88				**FCP296**	ATE	
3.5 24V M5	211	01/85 →	12/87	**FCP399**	ATE				
3.5 24V M5	211	01/85 →	12/87				**FCP296**	ATE	
518	66	07/81 →	05/88	**FCP256**	ATE				
518	66	07/81 →	05/88				**FCP296**	ATE	
520 i	110	12/86 →	12/87	**FCP256**	ATE				
520 i	92	06/81 →	12/87	**FCP256**	ATE				
520 i	95	08/85 →	12/87	**FCP256**	ATE				
524	85	01/83 →	05/88	**FCP256**	ATE				
524	85	01/83 →	05/88				**FCP296**	ATE	

For material availability see page 16-18 / Per la disponibilità materiali vedere a pagina 16-18

...BMW

	kW				NOTE			NOTE
...5 (E28)								
525 e 2.7	90	09/81 → 12/87	**FCP256**	ATE				
525 e 2.7	90	09/81 → 12/87				**FCP296**	ATE	
525 e 2.7	92	09/81 → 12/87	**FCP256**	ATE				
525 e 2.7	92	09/81 → 12/87				**FCP296**	ATE	
525 e 2.7	95	09/81 → 12/87	**FCP256**	ATE				
525 e 2.7	95	09/81 → 12/87				**FCP296**	ATE	
525i	110	06/81 → 12/87	**FCP256**	ATE				
525i	110	06/81 → 12/87				**FCP296**	ATE	
527	95	06/81 → 05/88	**FCP256**	ATE				
527	95	06/81 → 05/88				**FCP296**	ATE	
528i	135	06/81 → 12/87	**FCP256**	ATE				
528i	135	06/81 → 12/87				**FCP296**	ATE	
535 i, M 535 i	136	01/85 → 12/87	**FCP256**	ATE				
535 i, M 535 i	136	01/85 → 12/87				**FCP296**	ATE	
535 i, M 535 i	141	01/85 → 12/87	**FCP256**	ATE				
535 i, M 535 i	141	01/85 → 12/87				**FCP296**	ATE	
535 i, M 535 i	160	01/85 → 12/87	**FCP256**	ATE				
535 i, M 535 i	160	01/85 → 12/87				**FCP296**	ATE	
5 (E34)								
3.5 24V M5	232	06/88 → 12/91	**FCP779**	ATE				
3.5 24V M5	232	06/88 → 12/91				**FCP578**	ATE	
3.8 i 24V M5	250	03/92 → 06/94	**FCP779**	ATE				
3.8 i 24V M5	250	03/92 → 06/94				**FCP578**	ATE	
3.8 i 24V M5	250	06/94 → 09/95	**FCP1298**	BREMBO				
3.8 i 24V M5	250	06/94 → 09/95				**FCP1483**	ATE	
518i	83	08/89 → 09/95	**FCP779**	ATE				
518i	83	08/89 → 09/95				**FCP578**	ATE	
518i	85	08/89 → 09/95	**FCP779**	ATE				
518i	85	08/89 → 09/95				**FCP578**	ATE	
520i / 520i 24V	95, 110	06/88 → 09/95	**FCP779**	ATE				
520i / 520i 24V	95, 110	06/88 → 09/95				**FCP578**	ATE	
524td	85	03/88 → 09/95	**FCP779**	ATE				
524td	85	03/88 → 09/95				**FCP578**	ATE	
525	85, 105	06/88 → 12/89	**FCP779**	ATE				
525	85, 105	06/88 → 12/89				**FCP578**	ATE	
525	85, 105	01/90 → 09/95	**FCP779**	ATE				
525	85, 105	01/90 → 09/95				**FCP578**	ATE	
525 i	125	01/88 → 08/91	**FCP779**	ATE				
525 i	125	01/88 → 08/91				**FCP578**	ATE	
525 i 24V	141	09/89 → 09/95	**FCP779**	ATE				
525 i 24V	141	09/89 → 09/95				**FCP578**	ATE	
525 iX 24V	141	10/91 → 09/95	**FCP779**	ATE				
525 iX 24V	141	10/91 → 09/95				**FCP578**	ATE	
525 Touring	85, 105	07/91 → 01/97	**FCP779**	ATE				
525 Touring	85, 105	07/91 → 01/97				**FCP578**	ATE	
525d	85, 105	06/88 → 12/89	**FCP779**	ATE				
525d	85, 105	06/88 → 12/89				**FCP578**	ATE	
525d	85, 105	01/90 → 09/95	**FCP779**	ATE				
525d	85, 105	01/90 → 09/95				**FCP578**	ATE	
525iX 4wd 24V		01/90 → 06/96	**FCP779**	ATE				
525iX 4wd 24V		01/90 → 06/96				**FCP578**	ATE	
525td	85	06/88 → 12/89	**FCP779**	ATE				
525td	85	06/88 → 12/89				**FCP578**	ATE	
525td	85	01/90 → 09/95	**FCP779**	ATE				
525td	85	01/90 → 09/95				**FCP578**	ATE	
530i / 530i V8 32V	138, 160	06/88 → 09/95	**FCP779**	ATE				
530i / 530i V8 32V	138, 160	06/88 → 09/95				**FCP578**	ATE	
535i	155	06/88 → 09/95	**FCP779**	ATE				
535i	155	06/88 → 09/95				**FCP578**	ATE	
540i V8 32V	210	01/92 → 09/95	**FCP779**	ATE				
540i V8 32V	210	01/92 → 09/95				**FCP578**	ATE	
5 (E39)								
4.9 32V M5	294	10/98 → 06/03	**FCP997**	ATE				
4.9 32V M5	294	10/98 → 06/03				**FCP1483**	ATE	
520 i	100	04/99 → 06/03	**FCP1073**	ATE				
520 i	100	04/99 → 06/03				**FCP850**	ATE	
520 i	110	01/96 → 09/00	**FCP1073**	ATE				
520 i	110	01/96 → 09/00				**FCP850**	ATE	
520i	125	09/00 → 06/03	**FCP1073**	ATE				
520i	125	09/00 → 06/03	**FCP1773**	ATE	Automatic			
520i	125	09/00 → 06/03				**FCP850**	ATE	
523i / 525i	125, 141	09/95 → 06/03	**FCP1073**	ATE				
523i / 525i	125, 141	09/95 → 06/03				**FCP850**	ATE	
525d	105	09/95 →	**FCP1073**	ATE				
525d	105	09/95 →				**FCP850**	ATE	

For material availability see page 16-18 / Per la disponibilità materiali vedere a pagina 16-18

...BMW

	kW				NOTE			NOTE
...5 (E39)								
525d Touring	105	09/95 →	FCP1073	ATE				
525d Touring	105	09/95 →				FCP850	ATE	
525td	105	09/95 → 06/03	FCP1073	ATE				
525td	105	09/95 → 06/03				FCP850	ATE	
525td Touring	105	02/97 →	FCP1073	ATE				
525td Touring	105	02/97 →				FCP850	ATE	
528i	142	09/95 → 09/00	FCP1073	ATE				
528i	142	09/95 → 09/00				FCP850	ATE	
530d	135	08/98 → 09/00	FCP1073	ATE				
530d	135	08/98 → 09/00				FCP850	ATE	
530d	142	09/00 → 06/03	FCP997	ATE				
530d	142	09/00 → 06/03				FCP850	ATE	
530d	142	09/00 → 06/03				FCP1301	ATE	
530i	170	09/00 → 06/03	FCP997	ATE				
530i	170	09/00 → 06/03				FCP1301	ATE	
535i	173	04/96 → 03/99	FCP1073	ATE				
535i	173	04/96 → 03/99				FCP850	ATE	
535i	180	04/99 → 06/03	FCP997	ATE				
535i	180	04/99 → 06/03				FCP1301	ATE	
540i	210	04/96 → 06/03	FCP997	ATE				
540i	210	04/96 → 06/03				FCP1301	ATE	
5 (E60)								
5.0 40V M5	373	09/04 → 03/10				FCP1672	ATE	
5 (E61)								
5.0 40V Touring M5	373	02/07 →				FCP1672	ATE	
5 (F10)								
530 d	180	01/09 → 08/11	FCP4191	ATE	For vehicles without Sport package			
530 d	180	01/09 → 08/11				FCP4381	LUCAS/TRW	
530 d	190	01/11 → 10/16	FCP4191	ATE	For vehicles without Sport package			
530 d	190	01/11 → 10/16				FCP4381	LUCAS/TRW	
530 d xDrive	190	09/10 → 10/16	FCP4191	ATE	For vehicles without Sport package			
530 d xDrive	190	09/10 → 10/16				FCP4381	LUCAS/TRW	
530 d xDrive	210	09/10 → 10/16	FCP4191	ATE	For vehicles without Sport package			
530 d xDrive	210	09/10 → 10/16				FCP4381	LUCAS/TRW	
530 i	200	05/11 → 06/13	FCP4191	ATE	For vehicles without Sport package			
530 i	200	05/11 → 06/13				FCP4381	LUCAS/TRW	
535 i	240	07/13 → 10/16	FCP4191	ATE	For vehicles without Sport package			
535 i	240	07/13 → 10/16				FCP4381	LUCAS/TRW	
535 i xDrive	240	07/13 → 10/16	FCP4191	ATE	For vehicles without Sport package			
535 i xDrive	240	07/13 → 10/16				FCP4381	LUCAS/TRW	
ActiveHybrid	225	09/10 → 08/16	FCP4191	ATE	For vehicles without Sport package			
ActiveHybrid	225	09/10 → 08/16				FCP4381	LUCAS/TRW	
ActiveHybrid	250	09/10 → 08/16	FCP4191	ATE	For vehicles without Sport package			
ActiveHybrid	250	09/10 → 08/16				FCP4381	LUCAS/TRW	
5 (F10, F18)								
530 d	210	10/15 →				FCP4381	LUCAS/TRW	
535 d	220	08/10 →				FCP4381	LUCAS/TRW	
535 d	230	09/11 →				FCP4381	LUCAS/TRW	
535 d xDrive	230	09/11 →				FCP4381	LUCAS/TRW	
535 i	225	12/09 →				FCP4381	LUCAS/TRW	
535 i xDrive	225	03/11 →				FCP4381	LUCAS/TRW	
550 i	300	02/10 →				FCP4381	LUCAS/TRW	
550 i	330	05/13 →				FCP4381	LUCAS/TRW	
550 i xDrive	300	08/10 →				FCP4381	LUCAS/TRW	
550 i xDrive	330	05/13 →				FCP4381	LUCAS/TRW	
M 550 d xDrive	280	01/12 →				FCP4381	LUCAS/TRW	
M5	412	06/11 →	FCP4712	Brembo	for vehicles without ceramic discs			
M5	412	06/11 →				FCP4381	LUCAS/TRW	for vehicles without ceramic discs
M5	423	01/14 →	FCP4712	Brembo	for vehicles without ceramic discs			
M5	423	01/14 →				FCP4381	LUCAS/TRW	
M5	441	07/14 →	FCP4712	Brembo	for vehicles without ceramic discs			
M5	441	07/14 →				FCP4381	LUCAS/TRW	for vehicles without ceramic discs
5 (G30, F90)								
525d	155	07/17 →	FCP5055	BREMBO	Disc Diam mm:348,vehicles with M-sport package			
525d	155	07/17 →				FCP4381	BREMBO	
525d	170	07/17 →	FCP5055	BREMBO	Disc Diam mm:348,vehicles with M-sport package			
525d	170	07/17 →				FCP4381	BREMBO	
530d	195	09/16 →	FCP5055	BREMBO	For vehicles with M-sport package			
530d	195	09/16 →				FCP4381	BREMBO	
530d xDrive	183	09/16 →	FCP5055	BREMBO	For vehicles with M-sport package			
530d xDrive	183	09/16 →				FCP4381	BREMBO	

For material availability see page 16-18 / Per la disponibilità materiali vedere a pagina 16-18

FERODO RACING
Updated on November 2020

...BMW

	kW				NOTE			NOTE
...5 (G30, F90)								
530d xDrive	195	09/16 →	**FCP5055**	BREMBO	For vehicles with M-sport package			
530d xDrive	195	09/16 →				**FCP4381**	BREMBO	
530e	135	03/17 →	**FCP5055**	BREMBO	For vehicles with M-sport package			
530e	135	03/17 →				**FCP4381**	BREMBO	
530e iPerformance	135	03/17 →	**FCP5055**	BREMBO	Disc Diam mm:348,vehicles with M-sport package			
530e iPerformance	135	03/17 →				**FCP4381**	BREMBO	
530i	185	09/16 →	**FCP5055**	BREMBO	For vehicles with M-sport package			
530i	185	09/16 →				**FCP4381**	BREMBO	
530i xDrive	185	09/16 →	**FCP5055**	BREMBO	For vehicles with M-sport package			
530i xDrive	185	09/16 →				**FCP4381**	BREMBO	
540d xDrive	235	07/17 →	**FCP5055**	BREMBO	Disc Diam mm:348			
540d xDrive	235	07/17 →				**FCP4381**	BREMBO	
5 Saloon (E60)								
520d	110	09/05 → 03/10	**FCP1773**	ATE	Automatic			
520d	120	07/05 →	**FCP1773**	ATE	Automatic			
520d	120	07/05 → 03/10	**FCP1773**	ATE	Automatic			
520i	120	12/06 → 03/10	**FCP1773**	ATE	Automatic			
520i	125	07/03 → 03/10	**FCP1628**	ATE	Automatic			
520i	125	09/07 → 03/10	**FCP1773**	ATE	Automatic			
523i	130	07/05 →	**FCP1628**	ATE	Automatic			
523i	140	01/07 →	**FCP1773**	ATE	Automatic			
525d	120	12/04 → 03/10	**FCP1628**	ATE	Automatic			
525d	120	12/04 → 03/10	**FCP1773**	ATE	Automatic			
525d	130	06/04 → 03/10	**FCP1628**	ATE	Automatic			
525d	130	06/04 → 03/10	**FCP1773**	ATE	Automatic			
525i	141	09/03 →	**FCP1628**	ATE	Automatic			
525i	141	09/03 →	**FCP1773**	ATE	Automatic			
525i	160	07/05 →	**FCP1628**	ATE	Automatic			
525i	160	07/05 →	**FCP1773**	ATE	Automatic			
525xi	160	07/05 →	**FCP1628**	ATE				
530d	160	07/03 → 03/10	**FCP1628**	ATE	-> 06/05			
530d	170	07/03 → 03/10	**FCP1628**	ATE	-> 06/05			
530i	170	07/03 →	**FCP1628**	ATE	-> 06/05			
530i	190	07/05 →	**FCP1628**	ATE				
530xd	170	07/05 →	**FCP1628**	ATE				
530xi	190	07/05 →	**FCP1628**	ATE				
535d	200	09/04 → 03/10				**FCP1672**	ATE	
535d	210	01/07 → 03/10				**FCP1672**	ATE	
540i	225	07/05 →	**FCP1628**	ATE				
All 545i	245	09/03 →	**FCP1628**	ATE	-> 06/05			
5 Touring (E34)								
525 i	141	11/91 → 01/97	**FCP779**	ATE				
525 i	141	11/91 → 01/97				**FCP578**	ATE	
525 ix	141	02/92 → 01/97	**FCP779**	ATE				
525 ix	141	02/92 → 01/97				**FCP578**	ATE	
5 Touring (E39)								
520 i	100	04/99 → 05/04	**FCP1073**	ATE				
520 i	100	04/99 → 05/04				**FCP850**	ATE	
520 i	110	01/97 → 09/00	**FCP1073**	ATE				
520 i	110	01/97 → 09/00				**FCP850**	ATE	
520 i	125	09/00 → 05/04	**FCP1073**	ATE				
520 i	125	09/00 → 05/04	**FCP1628**	ATE	Automatic			
520 i	125	09/00 → 05/04				**FCP850**	ATE	
523i / 525i	125, 141	09/95 → 05/04	**FCP1073**	ATE				
523i / 525i	125, 141	09/95 → 05/04				**FCP850**	ATE	
528i	142	09/95 → 09/00	**FCP1073**	ATE				
528i	142	09/95 → 09/00				**FCP850**	ATE	
530d	135	08/98 → 09/00	**FCP1073**	ATE				
530d	135	08/98 → 09/00				**FCP1301**	ATE	
530d	142	09/00 → 05/04	**FCP997**	ATE				
530d	142	09/00 → 05/04				**FCP1301**	ATE	
530i	170	09/00 → 05/04	**FCP997**	ATE				
530i	170	09/00 → 05/04				**FCP1301**	ATE	
535i	173	04/96 → 03/99	**FCP1073**	ATE				
535i	173	04/96 → 03/99				**FCP850**	ATE	
540i	210	01/97 → 05/04	**FCP997**	ATE				
540i	210	01/97 → 05/04				**FCP1301**	ATE	
5 Touring (E61)								
520d	110	09/05 →	**FCP1773**	ATE	government vehicles			
520d	120	07/05 →	**FCP1628**	ATE				
520d	120	07/05 →	**FCP1773**	ATE	government vehicles			
520d	120	07/05 →	**FCP1773**	ATE	government vehicles			
520i	125	09/07 →	**FCP1773**	ATE	Automatic			

For material availability see page 16-18 / Per la disponibilità materiali vedere a pagina 16-18

...BMW

		kW				NOTE				NOTE
...5 Touring (E61)										
520i	163	07/05 →	**FCP1628**	ATE						
520i	163	07/05 →	**FCP1773**	ATE	government vehicles					
523i	130	07/05 →	**FCP1628**	ATE	Automatic					
523i	140	01/07 →	**FCP1773**	ATE	Automatic					
525d	120	06/04 →	**FCP1773**	ATE	government vehicles					
525d	120	12/04 →	**FCP1628**	ATE						
525d	130	06/04 →	**FCP1628**	ATE						
525d	130	06/04 →	**FCP1773**	ATE	government vehicles					
525i	141	06/04 →	**FCP1628**	ATE	Automatic					
525i	141	06/04 →	**FCP1773**	ATE	Automatic					
525i	160	07/05 →	**FCP1628**	ATE	Automatic					
525i	160	07/05 →	**FCP1773**	ATE	Automatic					
525xi	160	07/05 →	**FCP1628**	ATE	-> 06/05					
530d	160	06/04 →	**FCP1628**	ATE	-> 06/05					
530xd	170	07/05 →	**FCP1628**	ATE	-> 06/05					
530xi	190	07/05 →	**FCP1628**	ATE	-> 06/05					
545i	245	06/04 →	**FCP1628**	ATE	-> 06/05					
All 530i	231	06/04 →	**FCP1628**	ATE	-> 06/05					
All 530i	258	07/05 →	**FCP1628**	ATE	-> 06/05					
5 Touring (F11)										
518 d	100	01/13 →				**FCP4381**	LUCAS/TRW			
518 d	105	01/13 →				**FCP4381**	LUCAS/TRW			
518 d	110	05/14 →				**FCP4381**	LUCAS/TRW			
520 d	120	04/10 →				**FCP4381**	LUCAS/TRW			
520 d	135	09/10 →				**FCP4381**	LUCAS/TRW			
520 d	140	05/14 →				**FCP4381**	LUCAS/TRW			
520 d xDrive	120	02/13 →				**FCP4381**	LUCAS/TRW			
520 d xDrive	135	02/13 →				**FCP4381**	LUCAS/TRW			
520 d xDrive	140	05/14 →				**FCP4381**	LUCAS/TRW			
525 d xDrive	155	09/11 →				**FCP4381**	LUCAS/TRW			
525 d xDrive	160	09/11 →				**FCP4381**	LUCAS/TRW			
530 d	190	09/11 →				**FCP4381**	LUCAS/TRW			
530 d	210	10/15 →				**FCP4381**	LUCAS/TRW			
530 d xDrive	190	09/11 →				**FCP4381**	LUCAS/TRW			
530 d xDrive	210	10/15 →				**FCP4381**	LUCAS/TRW			
535 d	220	09/10 →				**FCP4381**	LUCAS/TRW			
535 d	230	09/11 →				**FCP4381**	LUCAS/TRW			
535 d xDrive	230	09/11 →				**FCP4381**	LUCAS/TRW			
535 i	225	09/10 →				**FCP4381**	LUCAS/TRW			
535 i	240	10/15 →				**FCP4381**	LUCAS/TRW			
535 i xDrive	225	09/11 →				**FCP4381**	LUCAS/TRW			
535 i xDrive	240	10/15 →				**FCP4381**	LUCAS/TRW			
550 i	300	09/10 →				**FCP4381**	LUCAS/TRW			
550 i	330	05/13 →				**FCP4381**	LUCAS/TRW			
M 550 d xDrive	280	01/12 →				**FCP4381**	LUCAS/TRW			
5 Touring (G31)										
520d xDrive Touring	120	07/17 →	**FCP5055**	BREMBO	Options:For vehicles with reinforced brakes.					
520d xDrive Touring	140	07/17 →	**FCP5055**	BREMBO	Options:For vehicles with reinforced brakes.					
525d Touring	155	07/17 →	**FCP5055**	BREMBO	Disc Diam mm:348,vehicles with M-sport package					
525d Touring	155	07/17 →				**FCP4381**	BREMBO			
525d Touring	170	07/17 →	**FCP5055**	BREMBO	Disc Diam mm:348,vehicles with M-sport package					
525d Touring	170	07/17 →				**FCP4381**	BREMBO			
530d Touring	195	03/17 →	**FCP5055**	BREMBO	For vehicles with M-sport package					
530d Touring	195	03/17 →				**FCP4381**	BREMBO			
530d xDrive Touring	195	03/17 →	**FCP5055**	BREMBO	For vehicles with M-sport package					
530d xDrive Touring	195	03/17 →				**FCP4381**	BREMBO			
530i Touring	185	03/17 →	**FCP5055**	BREMBO	For vehicles with M-sport package					
530i Touring	185	03/17 →				**FCP4381**	BREMBO			
530i xDrive Touring	185	07/17 →	**FCP5055**	BREMBO	Disc Diam mm:348,vehicles with M-sport package					
530i xDrive Touring	185	07/17 →				**FCP4381**	BREMBO			
540d xDrive Touring	235	07/17 →	**FCP5055**	BREMBO	Disc Diam mm:348					
540d xDrive Touring	235	07/17 →				**FCP4381**	BREMBO			
540i xDrive Touring	250	03/17 →	**FCP5055**	BREMBO						
540i xDrive Touring	250	03/17 →				**FCP4381**	BREMBO			
540i xDrive Touring	265	03/17 →	**FCP5055**	BREMBO						
540i xDrive Touring	265	03/17 →				**FCP4381**	BREMBO			
6 (E24)										
525		01/76 → 06/82	**FCP399**	ATE						
525		01/76 → 06/82				**FCP3**	ATE			
530	135	01/76 → 12/80	**FCP399**	ATE						
530	135	01/76 → 12/80				**FCP3**	ATE			
530	135	01/81 → 08/82	**FCP399**	ATE						
530	135	01/81 → 08/82				**FCP3**	ATE			
628Csi	135	09/79 → 08/87	**FCP256**	ATE	07/82 ->					

For material availability see page 16-18 / Per la disponibilità materiali vedere a pagina 16-18

...BMW

	kW				NOTE			NOTE
...6 (E24)								
628Csi	135	09/79 → 08/87	**FCP399**	ATE	-> 06/82			
628Csi	135	09/79 → 08/87				**FCP3**	ATE	-> 06/82
628Csi	135	09/79 → 08/87				**FCP296**	ATE	07/82 ->
630	135	01/81 → 08/82	**FCP256**	ATE				
630	135	01/81 → 08/82				**FCP296**	ATE	
633Csi	145	04/76 → 08/84	**FCP399**	ATE				
633Csi	145	04/76 → 08/84				**FCP3**	ATE	
635Csi	160	06/78 → 06/82	**FCP399**	ATE	-> 06/82			
635Csi	160	06/78 → 06/82				**FCP3**	ATE	->06/82
635i	160	07/82 → 12/89	**FCP256**	ATE	06/82 ->			
635i	160	07/82 → 12/89				**FCP296**	ATE	06/82 ->
M 635Csi	211	03/84 → 05/89	**FCP256**	ATE				
M 635Csi	211	03/84 → 05/89				**FCP296**	ATE	
6 (E63)								
630i	190	09/04 →	**FCP1628**	ATE				
630i	190	09/04 →				**FCP1672**	ATE	
645Ci	245	01/04 →	**FCP1628**	ATE				
645Ci	245	01/04 →				**FCP1672**	ATE	
650i	270	07/05 →				**FCP1672**	ATE	
6 Convertible (E64)								
630i	190	09/04 →	**FCP1628**	ATE				
630i	190	09/04 →				**FCP1672**	ATE	
645Ci	245	04/04 →	**FCP1628**	ATE				
645Ci	245	04/04 →				**FCP1672**	ATE	
650i	270	07/05 →				**FCP1672**	ATE	
6 Convertible (F12)								
640 d	230	09/11 →				**FCP4381**	LUCAS/TRW	
640 d xDrive	230	09/11 →				**FCP4381**	LUCAS/TRW	
640 i	235	03/11 →				**FCP4381**	LUCAS/TRW	
640 i xDrive	235	01/13 →				**FCP4381**	LUCAS/TRW	
650 i	300	03/11 →				**FCP4381**	LUCAS/TRW	
650 i	330	10/11 →				**FCP4381**	LUCAS/TRW	
650 i xDrive	300	06/11 →				**FCP4381**	LUCAS/TRW	
650 i xDrive	330	11/11 →				**FCP4381**	LUCAS/TRW	
M6	412	01/12 →	**FCP4712**	Brembo				
M6	412	01/12 →				**FCP4381**	LUCAS/TRW	
M6	423	02/14 →	**FCP4712**	Brembo	for vehicles without ceramic discs			
M6	423	02/14 →				**FCP4381**	LUCAS/TRW	
M6	441	07/15 →	**FCP4712**	Brembo	NOT FOR CERAMIC DISCS,Not for SA code:S4007			
M6	441	07/15 →				**FCP4381**	LUCAS/TRW	
6 Coupe								
M6 GT3	430	01/16 →	**FRP3150**	AP RACING				
M6 GT3	430	01/16 →				**FRP1078**	AP RACING	
6 Coupe (F13)								
640 d	230	11/10 →				**FCP4381**	LUCAS/TRW	
640 d xDrive	230	09/11 →				**FCP4381**	LUCAS/TRW	
640 i	235	11/10 →				**FCP4381**	LUCAS/TRW	
640 i xDrive	235	01/13 →				**FCP4381**	LUCAS/TRW	
650 i	300	11/10 →				**FCP4381**	LUCAS/TRW	
650 i	330	10/11 →				**FCP4381**	LUCAS/TRW	
650 i xDrive	300	06/11 →				**FCP4381**	LUCAS/TRW	
650 i xDrive	330	11/11 →				**FCP4381**	LUCAS/TRW	
M6	412	01/12 →	**FCP4712**	Brembo				
M6	412	01/12 →				**FCP4381**	LUCAS/TRW	
M6	423	02/14 →	**FCP4712**	Brembo	for vehicles without ceramic discs			
M6	423	02/14 →				**FCP4381**	LUCAS/TRW	
M6	441	07/15 →	**FCP4712**	Brembo	NOT FOR CERAMIC DISCS,Not for SA code:S4007			
M6	441	07/15 →				**FCP4381**	LUCAS/TRW	
6 Gran Coupe (F06)								
640 d	230	09/11 →				**FCP4381**	LUCAS/TRW	
640 d xDrive	230	01/13 →				**FCP4381**	LUCAS/TRW	
640 i	235	09/11 →				**FCP4381**	LUCAS/TRW	
640 i xDrive	235	01/13 →				**FCP4381**	LUCAS/TRW	
650 i	330	11/11 →				**FCP4381**	LUCAS/TRW	
650 i xDrive	330	11/11 →				**FCP4381**	LUCAS/TRW	
M6	410	11/13 →	**FCP4712**	Brembo	for vehicles without ceramic discs			
M6	412	12/12 →	**FCP4712**	Brembo	for vehicles without ceramic discs			
M6	412	12/12 →				**FCP4381**	LUCAS/TRW	for vehicles without ceramic discs
M6	423	02/14 →	**FCP4712**	Brembo	for vehicles without ceramic discs			
M6	423	02/14 →				**FCP4381**	LUCAS/TRW	

For material availability see page 16-18 / Per la disponibilità materiali vedere a pagina 16-18

...BMW	kW				NOTE			NOTE
...6 Gran Coupe (F06)								
M6	441	07/15 →				FCP4381	LUCAS/TRW	
6 Gran Turismo (G32)								
630d Gran Turismo	155	06/17 →	FCP5055	BREMBO	Disc Diam mm:348			
630d Gran Turismo	155	06/17 →				FCP4381	BREMBO	
630d Gran Turismo	195	06/17 →	FCP5055	BREMBO	Disc Diam mm:348			
630d Gran Turismo	195	06/17 →				FCP4381	BREMBO	
630d xDrive Gran Turismo	155	06/17 →	FCP5055	BREMBO	Disc Diam mm:348			
630d xDrive Gran Turismo	155	06/17 →				FCP4381	BREMBO	
630d xDrive Gran Turismo	183	06/17 →	FCP5055	BREMBO	Disc Diam mm:348			
630d xDrive Gran Turismo	183	06/17 →				FCP4381	BREMBO	
630d xDrive Gran Turismo	195	06/17 →	FCP5055	BREMBO	Disc Diam mm:348			
630d xDrive Gran Turismo	195	06/17 →				FCP4381	BREMBO	
630i Gran Turismo	190	06/17 →	FCP5055	BREMBO	Disc Diam mm:348			
630i Gran Turismo	190	06/17 →				FCP4381	BREMBO	
640d xDrive Gran Turismo	235	11/17 →	FCP5055	BREMBO	Disc Diam mm:348			
640d xDrive Gran Turismo	235	11/17 →				FCP4381	BREMBO	
640i Gran Turismo	250	06/17 →	FCP5055	BREMBO	Disc Diam mm:348			
640i Gran Turismo	250	06/17 →				FCP4381	BREMBO	
640i Gran Turismo	265	06/17 →	FCP5055	BREMBO	Brake System:STANDARD,Disc Diam mm:348			
640i Gran Turismo	265	06/17 →				FCP4381	BREMBO	
640i xDrive Gran Turismo	250	06/17 →	FCP5055	BREMBO	Disc Diam mm:348			
640i xDrive Gran Turismo	250	06/17 →				FCP4381	BREMBO	
640i xDrive Gran Turismo	265	06/17 →	FCP5055	BREMBO	Brake System:STANDARD,Disc Diam mm:348			
640i xDrive Gran Turismo	265	06/17 →				FCP4381	BREMBO	
7 (E23)								
725		01/77 → 12/79	FCP399	ATE				
725		01/77 → 12/79				FCP2	ATE	
725	110	08/81 → 08/86	FCP399	ATE				
725	110	08/81 → 08/86				FCP296	ATE	
728	125	01/77 → 08/79	FCP399	ATE				
728	125	01/77 → 07/81	FCP399	ATE				
728	125	01/77 → 08/79				FCP2	ATE	
728	125	01/77 → 07/81				FCP2	ATE	
728i	135	07/78 → 08/86	FCP399	ATE				
728i	135	07/78 → 08/86				FCP296	ATE	08/81 ->
730	135	01/77 → 12/79	FCP399	ATE				
730	135	01/77 → 12/79				FCP2	ATE	
730	135	05/77 → 08/79	FCP399	ATE				
730	135	05/77 → 08/79				FCP2	ATE	
730	135	01/80 → 08/81	FCP399	ATE				
730	135	01/80 → 08/81				FCP2	ATE	
732i / 733i	145	05/77 → 08/86	FCP399	ATE				
732i / 733i	145	05/77 → 08/86				FCP296	ATE	08/81->
732i / 733i	145	05/77 → 08/86				FCP2	ATE	->08/81
735 i	136	01/85 → 08/86	FCP399	ATE				
735 i	136	01/85 → 08/86				FCP296	ATE	
735 i	141	04/85 → 08/86	FCP399	ATE				
735 i	141	04/85 → 08/86				FCP296	ATE	
745 i	185	04/80 → 04/83	FCP399	ATE				
745 i	185	04/80 → 04/83				FCP296	ATE	
745 i	185	05/83 → 08/86	FCP399	ATE				
745 i	185	05/83 → 08/86				FCP296	ATE	
745 i	220	08/81 → 04/83	FCP399	ATE				
745 i	220	08/81 → 04/83				FCP2	ATE	-> 08/81
7 (E32)								
730i / iL	138, 145	01/85 → 09/94	FCP779	ATE				
730i / iL	138, 145	01/85 → 09/94				FCP578	ATE	
730i / iL V8	160	01/92 → 06/94	FCP779	ATE				
730i / iL V8	160	01/92 → 06/94				FCP578	ATE	
735i, iL	155, 160	09/86 → 09/92	FCP779	ATE				
735i, iL	155, 160	09/86 → 09/92				FCP578	ATE	
740i / iL V12	220	09/87 → 09/94	FCP779	ATE				
740i / iL V12	220	09/87 → 09/94				FCP578	ATE	
740i /iL V8	210	04/92 → 09/94	FCP779	ATE				
740i /iL V8	210	04/92 → 09/94				FCP578	ATE	
7 (E38)								
725 tds	143	04/96 → 11/01	FCP1298	BREMBO				
725 tds	105	04/96 → 11/01	FCP1298	BREMBO				
725 tds	105	04/96 → 11/01				FCP1483	ATE	
728 i,iL	193	08/95 → 11/01	FCP1298	BREMBO				
728 i,iL	142	08/95 → 11/01	FCP1298	BREMBO				
728 i,iL	142	08/95 → 11/01				FCP1483	ATE	
728i X	142	11/95 → 09/01	FCP1298	BREMBO				

For material availability see page 16-18 / Per la disponibilità materiali vedere a pagina 16-18



kW

...BMW

...7 (E38)

728i X	142	11/95 → 09/01				FCP1483	ATE	
730 d	184, 193	08/98 → 11/01	FCP1298	BREMBO				
730 d	135	08/98 → 04/00	FCP1298	BREMBO				
730 d	135	08/98 → 04/00				FCP1483	ATE	
730 d	142	04/00 → 11/01	FCP1298	BREMBO				
730 d	142	04/00 → 11/01				FCP1483	ATE	
730 i, iL	155	10/94 → 11/01	FCP1298	BREMBO				
730 i, iL	155	10/94 → 11/01				FCP1483	ATE	
730 i, iL	160	10/94 → 11/01	FCP1298	BREMBO				
730 i, iL	160	10/94 → 11/01				FCP1483	ATE	
730 i,iL	211, 218	10/94 → 11/01	FCP1298	BREMBO				
735 i,iL	235	01/96 → 11/01	FCP1298	BREMBO				
735 i,iL	173	01/96 → 11/01	FCP1298	BREMBO				
735 i,iL	173	01/96 → 11/01				FCP1483	ATE	
740 d	180	05/99 → 11/01				FCP1483	ATE	
740 i, iL	210	10/94 → 11/01	FCP997	ATE				
740 i, iL	210	10/94 → 11/01				FCP1483	ATE	
750 i, iL	240	12/94 → 11/01				FCP1483	ATE	

7 (E65, E66, E67)

730 d	160	10/02 →	FCP1628	ATE				
730 d	160	10/02 →				FCP1672	ATE	
730 i,Li	170	03/03 →	FCP1628	ATE				
730 i,Li	170	03/03 →				FCP1672	ATE	
730 i,Li	190	03/05 →	FCP1628	ATE				
730 i,Li	190	03/05 →				FCP1672	ATE	
730 Ld	170	07/05 →	FCP1628	ATE				
730 Ld	170	07/05 →				FCP1672	ATE	
735 i,Li	200	11/01 →	FCP1298	BREMBO				
735 i,Li	200	11/01 →	FCP1628	ATE				
735 i,Li	200	11/01 →				FCP1672	ATE	
740 d	190	10/02 →	FCP1628	ATE				
740 d	190	10/02 →				FCP1672	ATE	
745 d	242	07/05 →	FCP1628	ATE				
745 d	242	07/05 →				FCP1672	ATE	
745 i,Li	245	11/01 →	FCP1628	ATE				
745 i,Li	245	11/01 →				FCP1672	ATE	
All 740 i,Li	225	07/05 →	FCP1628	ATE				
All 740 i,Li	225	07/05 →				FCP1672	ATE	

7 (G11, G12)

730d	155	09/15 →	FCP5055	BREMBO	Disc Diam mm:348			
730d	155	09/15 →				FCP4381	BREMBO	
730d	195	09/15 →	FCP5055	BREMBO	Disc Diam mm:348			
730d	195	09/15 →				FCP4381	BREMBO	
730d xDrive	155	09/15 →	FCP5055	BREMBO	Disc Diam mm:348			
730d xDrive	155	09/15 →				FCP4381	BREMBO	
730d xDrive	195	09/15 →	FCP5055	BREMBO	Disc Diam mm:348			
730d xDrive	195	09/15 →				FCP4381	BREMBO	
730i	190	02/16 →	FCP5055	BREMBO				
730i	190	02/16 →				FCP4381	BREMBO	
730i	195	03/19 →	FCP5055	BREMBO	Brake System:STANDARD,Disc Diam mm:348			
730i	195	03/19 →				FCP4381	BREMBO	
740d xDrive	235	11/15 →	FCP5055	BREMBO				
740d xDrive	235	11/15 →				FCP4381	BREMBO	
740e	190	04/16 →	FCP5055	BREMBO	For vehicles without sports package			
740e	190	04/16 →				FCP4381	BREMBO	
740e xDrive	190	04/16 →	FCP5055	BREMBO	For vehicles without sports package			
740e xDrive	190	04/16 →				FCP4381	BREMBO	
740i	240	09/15 →	FCP5055	BREMBO				
740i	240	09/15 →				FCP4381	BREMBO	
740i	250	03/19 →	FCP5055	BREMBO	Brake System:STANDARD,Disc Diam mm:348			
740i	250	03/19 →				FCP4381	BREMBO	
740i xDrive	240	03/16 →	FCP5055	BREMBO				
740i xDrive	240	03/16 →				FCP4381	BREMBO	
740i xDrive	250	03/19 →	FCP5055	BREMBO	Brake System:STANDARD,Disc Diam mm:348			
740i xDrive	250	03/19 →				FCP4381	BREMBO	

8 (E31)

830 Ci	160	08/92 → 12/99	FCP1298	BREMBO				
840 Ci	286	01/96 → 12/99	FCP1298	BREMBO				
840 Ci	286	01/96 → 12/99				FCP857	ATE	
840 i	286	02/93 → 02/96	FCP1298	ATE	->03/94			
840Ci	210	01/96 → 12/99	FCP1298	BREMBO				
840Ci	210	01/96 → 12/99				FCP857	ATE	
840i	210	02/93 → 02/96	FCP1298	BREMBO	03/94 ->			
840i	210	02/93 → 02/96	FCP856	ATE	-> 03/94			

For material availability see page 16-18 / Per la disponibilità materiali vedere a pagina 16-18

...BMW	kW					NOTE			NOTE
...8 (E31)									
840i	210	02/93 → 02/96					FCP857	ATE	
840i	210	02/93 → 02/96					FCP857	ATE	
850 Ci	326	09/94 → 12/99	FCP1298	BREMBO	03/94->				
850 Ci	326	09/94 → 12/99					FCP857	ATE	
850 i,Ci	300	04/90 → 10/94	FCP1298	ATE	->03/94				
850Ci	240	09/94 → 12/99	FCP1298	BREMBO	03/94 ->				
850Ci	240	09/94 → 12/99					FCP857	ATE	
850Csi	280	04/93 → 12/96	FCP856	ATE	-> 03/94				
850Csi	280	04/93 → 12/96					FCP857	ATE	
850i / 850Ci	220	04/93 → 02/96	FCP1298	BREMBO	03/94 ->				
850i / 850Ci	220	04/93 → 02/96					FCP857	ATE	
850i /850Ci	220	04/90 → 10/94	FCP856	ATE	-> 03/94				
850i /850Ci	220	04/90 → 10/94					FCP857	ATE	
8 Convertible (G14, F91)									
840d xDrive Cabrio	235	07/18 →	FCP5055	BREMBO	Brake System:STANDARD,Disc Diam mm:348				
840d xDrive Cabrio	235	07/18 →					FCP4381	BREMBO	
840i Cabrio	250	07/19 →	FCP5055	BREMBO	Brake System:Standard,Disc Diam mm:348				
840i Cabrio	250	07/19 →					FCP4381	BREMBO	
840i xDrive Cabrio	250	07/19 →	FCP5055	BREMBO	Brake System:Standard,Disc Diam mm:348				
840i xDrive Cabrio	250	07/19 →					FCP4381	BREMBO	
8 Coupe (G15, F92)									
840d xDrive Coupe	235	07/18 →	FCP5055	BREMBO	Brake System:STANDARD,Disc Diam mm:348				
840d xDrive Coupe	235	07/18 →					FCP4381	BREMBO	
840i Coupe	250	07/19 →	FCP5055	BREMBO	Brake System:Standard,Disc Diam mm:348				
840i Coupe	250	07/19 →					FCP4381	BREMBO	
840i xDrive Coupe	250	07/19 →	FCP5055	BREMBO	Brake System:Standard,Disc Diam mm:348				
840i xDrive Coupe	250	07/19 →					FCP4381	BREMBO	
i8									
i8	170	03/14 →	FCP4611	Brembo	For vehicles with sports package				
M8									
GTE		01/18 →	FRP3153	BREMBO					
GTE		01/18 →					FRP3156	BREMBO	
X1 (E84)									
sDrive 16d 2.0	85	07/12 →	FCP4191	ATE					
sDrive 16d 2.0	85	07/12 →					FCP1807	ATE	
sDrive 18d 2.0	100	12/09 →	FCP4191	ATE					
sDrive 18d 2.0	100	12/09 →					FCP1807	ATE	
sDrive 18d 2.0	105	12/09 →	FCP4191	ATE					
sDrive 18d 2.0	105	12/09 →					FCP1807	ATE	
sDrive 18i 2.0	100	01/10 → 10/12	FCP4191	ATE					
sDrive 18i 2.0	100	01/10 → 10/12					FCP1807	ATE	
sDrive 18i 2.0	110	01/10 →	FCP4191	ATE					
sDrive 18i 2.0	110	01/10 →					FCP1807	ATE	
sDrive 20d 2.0	130	10/09 →	FCP4191	ATE					
sDrive 20d 2.0	130	10/09 →					FCP1807	ATE	
sDrive 20d 2.0	135	08/12 →	FCP4191	ATE					
sDrive 20d 2.0	135	08/12 →					FCP1807	ATE	
sDrive 20d 2.0 - Efficient Dynamics	120	03/10 →	FCP4191	ATE					
sDrive 20d 2.0 - Efficient Dynamics	120	03/10 →					FCP1807	ATE	
sDrive 20i 2.0	135	09/11 →	FCP4191	ATE					
sDrive 20i 2.0	135	09/11 →					FCP1807	ATE	
xDrive 18d 2.0	100	12/09 →	FCP4191	ATE					
xDrive 18d 2.0	100	12/09 →					FCP1807	ATE	
xDrive 18d 2.0	105	12/09 →	FCP4191	ATE					
xDrive 18d 2.0	105	12/09 →					FCP1807	ATE	
xDrive 20d 2.0	120	03/10 →	FCP4191	ATE					
xDrive 20d 2.0	120	03/10 →					FCP1807	ATE	
xDrive 20d 2.0	130	10/09 →	FCP4191	ATE					
xDrive 20d 2.0	130	10/09 →					FCP1807	ATE	
xDrive 20d 2.0	135	08/12 →	FCP4191	ATE					
xDrive 20d 2.0	135	08/12 →					FCP1807	ATE	
xDrive 20i 2.0	135	09/11 →	FCP4191	ATE					
xDrive 20i 2.0	135	09/11 →					FCP1807	ATE	
xDrive 25d 2.0 - Twin Turbo	160	07/12 →	FCP4191	ATE					
xDrive 25d 2.0 - Twin Turbo	160	07/12 →					FCP1807	ATE	

For material availability see page 16-18 / Per la disponibilità materiali vedere a pagina 16-18



...BMW	kW				NOTE			NOTE
X3 (E83)								
2.0 d	110	10/04 →	**FCP1073**	ATE				
2.0 d	110	10/04 →				**FCP1483**	ATE	
2.0 i	110	07/05 →	**FCP1073**	ATE				
2.0 i	110	07/05 →				**FCP1483**	ATE	
2.5 i	141	01/04 →	**FCP1073**	ATE				
2.5 i	141	01/04 →				**FCP1483**	ATE	
3.0 d	150	01/04 →	**FCP1073**	ATE				
3.0 d	150	01/04 →				**FCP1483**	ATE	
3.0 d	160	01/04 →	**FCP1073**	ATE				
3.0 d	160	01/04 →				**FCP1483**	ATE	
3.0 i	170	01/04 →	**FCP1073**	ATE				
3.0 i	170	01/04 →				**FCP1483**	ATE	
3.0 sd	210	09/06 →	**FCP1073**	ATE				
3.0 sd	210	09/06 →				**FCP1483**	ATE	
X3 (F25)								
sDrive 18 d	100	08/11 →	**FCP4394**	BOSCH				
sDrive 18 d	105	08/11 →	**FCP4394**	BOSCH				
sDrive 18 d	110	02/14 →	**FCP4394**	BOSCH				
sDrive 18 i	125	04/14 →	**FCP4394**	BOSCH				
sDrive 20 i	135	02/14 →	**FCP4394**	BOSCH				
xDrive 20 d	120	09/10 →	**FCP4394**	BOSCH				
xDrive 20 d	135	09/10 →	**FCP4394**	BOSCH				
xDrive 20 d	140	02/14 →	**FCP4394**	BOSCH				
xDrive 20 i	135	09/11 →	**FCP4394**	BOSCH				
xDrive 28 d	134	09/14 →	**FCP4394**	BOSCH				
xDrive 28 i	180	08/11 →	**FCP4394**	BOSCH				
xDrive 28 i	190	04/11 →	**FCP4394**	BOSCH				
xDrive 30 d	155	05/11 →	**FCP4394**	BOSCH				
xDrive 30 d	190	05/11 →	**FCP4394**	BOSCH				
xDrive 35 d	230	09/11 →	**FCP4394**	BOSCH				
xDrive 35 i	225	09/10 →	**FCP4394**	BOSCH				
X3 (G01, F97)								
X3 sDrive 18d	100	04/18 →	**FCP5055**	BREMBO	For vehicles with M-sport package			
X3 sDrive 18d	110	04/18 →	**FCP5055**	BREMBO	For vehicles with M-sport package			
X3 sDrive 20i	125	12/17 →	**FCP5055**	BREMBO	For vehicles with M-sport package			
X3 sDrive 20i	135	12/17 →	**FCP5055**	BREMBO	For vehicles with M-sport package			
X3 xDrive 20d	120	10/17 →	**FCP5055**	BREMBO	For vehicles with M-sport package			
X3 xDrive 20d	140	10/17 →	**FCP5055**	BREMBO	For vehicles with M-sport package			
X3 xDrive 20i	135	03/18 →	**FCP5055**	BREMBO	For vehicles with M-sport package			
X3 xDrive 25d	155	04/18 →	**FCP5055**	BREMBO	For vehicles with M-sport package			
X3 xDrive 25d	155	04/18 →				**FCP4381**	BREMBO	
X3 xDrive 25d	170	04/18 →	**FCP5055**	BREMBO	For vehicles with M-sport package			
X3 xDrive 25d	170	04/18 →				**FCP4381**	BREMBO	
X3 xDrive 30d	183	04/18 →	**FCP5055**	BREMBO	For vehicles with M-sport package			
X3 xDrive 30d	183	04/18 →				**FCP4381**	BREMBO	
X3 xDrive 30d	195	07/17 →	**FCP5055**	BREMBO	For vehicles with M-sport package			
X3 xDrive 30d	195	07/17 →				**FCP4381**	BREMBO	
X3 xDrive 30i	185	12/17 →	**FCP5055**	BREMBO	For vehicles with M-sport package			
X3 xDrive M40d	240	08/18 →	**FCP5055**	BREMBO				
X3 xDrive M40d	240	08/18 →				**FCP4381**	BREMBO	
X3 xDrive M40i	260	09/18 →	**FCP5055**	BREMBO				
X3 xDrive M40i	260	09/18 →				**FCP4381**	BREMBO	
X3 xDrive M40i	265	10/17 →	**FCP5055**	BREMBO				
X3 xDrive M40i	265	10/17 →				**FCP4381**	BREMBO	
X4 (F26)								
xDrive 20 d	120	06/14 →	**FCP4394**	BOSCH				
xDrive 20 d	140	04/14 →	**FCP4394**	BOSCH				
xDrive 20 i	135	04/14 →	**FCP4394**	BOSCH				
xDrive 28 i	180	04/14 →	**FCP4394**	BOSCH				
xDrive 30 d	155	04/14 →	**FCP4394**	BOSCH				
xDrive 30 d	190	04/14 →	**FCP4394**	BOSCH				
xDrive 35 d	230	04/14 →	**FCP4394**	BOSCH				
xDrive 35 i	225	04/14 →	**FCP4394**	BOSCH				
X4 (G02, F98)								
X4 xDrive 20d	120	04/18 →	**FCP5055**	BREMBO	For vehicles with M-sport package			
X4 xDrive 20d	140	04/18 →	**FCP5055**	BREMBO	For vehicles with M-sport package			
X4 xDrive 20i	135	04/18 →	**FCP5055**	BREMBO	Disc Diam mm:348,vehicles with M-sport package			
X4 xDrive 25d	155	04/18 →	**FCP5055**	BREMBO	For vehicles with M-sport package			
X4 xDrive 25d	155	04/18 →				**FCP4381**	BREMBO	
X4 xDrive 25d	170	04/18 →	**FCP5055**	BREMBO	For vehicles with M-sport package			
X4 xDrive 25d	170	04/18 →				**FCP4381**	BREMBO	
X4 xDrive 30d	183	09/18 →	**FCP5055**	BREMBO	For vehicles with M-sport package			
X4 xDrive 30d	183	09/18 →				**FCP4381**	BREMBO	

For material availability see page 16-18 / Per la disponibilità materiali vedere a pagina 16-18

...BMW	kW				NOTE			NOTE
...X4 (G02, F98)								
X4 xDrive 30d	195	04/18 →	**FCP5055**	BREMBO	For vehicles with M-sport package			
X4 xDrive 30d	195	04/18 →				**FCP4381**	BREMBO	
X4 xDrive 30i	185	04/18 →	**FCP5055**	BREMBO	Disc Diam mm:348,vehicles with M-sport package			
X4 xDrive M40d	240	04/18 →	**FCP5055**	BREMBO				
X4 xDrive M40d	240	04/18 →				**FCP4381**	BREMBO	
X4 xDrive M40i	260	04/18 →	**FCP5055**	BREMBO				
X4 xDrive M40i	260	04/18 →				**FCP4381**	BREMBO	
X4 xDrive M40i	265	04/18 →	**FCP5055**	BREMBO				
X4 xDrive M40i	265	04/18 →				**FCP4381**	BREMBO	
X5 (E53)								
3.0 d	135	05/01 →	**FCP997**	ATE				
3.0 d	135	05/01 →				**FCP1483**	ATE	
3.0 d	160	12/03 →	**FCP997**	ATE				
3.0 d	160	12/03 →				**FCP1483**	ATE	
3.0 i	163	05/00 →	**FCP997**	ATE				
3.0 i	163	05/00 →				**FCP1483**	ATE	
3.0 i	170	05/00 →	**FCP997**	ATE				
3.0 i	170	05/00 →				**FCP1483**	ATE	
4.4 i	210	05/00 →	**FCP997**	ATE				
4.4 i	210	05/00 →				**FCP1483**	ATE	
4.4 i	235	05/00 →	**FCP997**	ATE				
4.4 i	235	05/00 →				**FCP1483**	ATE	
4.6 is	255	02/02 →				**FCP1483**	ATE	
4.8 is	265	04/04 →				**FCP1483**	ATE	
X5 (E70)								
M 50 d	280	08/11 → 06/13				**FCP1672**	ATE	
X5 (F15,F85)								
M 50 d	280	07/13 →				**FCP1672**	ATE	
X5 (G05, F95)								
X5 xDrive 30d	183	08/18 →	**FCP5055**	BREMBO	Brake System:STANDARD			
X5 xDrive 30d	183	08/18 →				**FCP4381**	BREMBO	
X5 xDrive 30d	195	08/18 →	**FCP5055**	BREMBO	Brake System:STANDARD			
X5 xDrive 30d	195	08/18 →				**FCP4381**	BREMBO	
X5 xDrive 40i	250	08/18 →	**FCP5055**	BREMBO	Brake System:STANDARD			
X5 xDrive 40i	250	08/18 →				**FCP4381**	BREMBO	
X7 (G07)								
X7 xDrive 30d	155	03/19 →	**FCP5055**	BREMBO	Brake System:STANDARD			
X7 xDrive 30d	155	03/19 →				**FCP4381**	BREMBO	
X7 xDrive 30d	183	03/19 →	**FCP5055**	BREMBO	Brake System:STANDARD			
X7 xDrive 30d	183	03/19 →				**FCP4381**	BREMBO	
X7 xDrive 30d	195	03/19 →	**FCP5055**	BREMBO	Brake System:STANDARD			
X7 xDrive 30d	195	03/19 →				**FCP4381**	BREMBO	
X7 xDrive 40i	250	03/19 →	**FCP5055**	BREMBO	Disc Diam mm:348,For SA code:S212A			
X7 xDrive 40i	250	03/19 →				**FCP4381**	BREMBO	
Z1								
2.5	125	01/88 → 12/91	**FCP660**	LUCAS/TRW				
2.5	125	01/88 → 12/91				**FCP850**	ATE	
Z3								
1.8	85	10/95 → 10/98	**FCP725**	ATE				
1.8	85	10/95 → 10/98				**FCP850**	ATE	
2.0	110	04/99 →	**FCP1300**	ATE				
2.0	110	04/99 →				**FCP850**	ATE	
2.8	141	04/97 → 06/00	**FCP1300**	ATE				
2.8	141	04/97 → 06/00				**FCP850**	ATE	
M 3.2	236	03/97 →	**FCP779**	ATE				
M 3.2	236	03/97 →				**FCP578**	ATE	
Z3 (E36)								
2.2	125	08/00 →	**FCP1300**	ATE				
2.2	125	08/00 →				**FCP850**	ATE	
3.0	170	06/00 →	**FCP1300**	ATE				
3.0	170	06/00 →				**FCP850**	ATE	

For material availability see page 16-18 / Per la disponibilità materiali vedere a pagina 16-18

FERODO RACING
Updated on November 2020

	kW							
...BMW					NOTE			NOTE
Z3 Coupe (E36)								
2.8	141	07/97 → 06/00	**FCP1300**	ATE				
2.8	141	07/97 → 06/00				**FCP850**	ATE	
3.0	170	06/00 →	**FCP1300**	ATE				
3.0	170	06/00 →				**FCP850**	ATE	
M 3.2	236, 239	07/97 →	**FCP779**	ATE				
M 3.2	236, 239	07/97 →				**FCP578**	ATE	
Z3 Roadster (E36)								
1.9 i	103	10/95 → 03/99	**FCP725**	ATE				
1.9 i	103	10/95 → 03/99				**FCP850**	ATE	
1.9 i	85	01/99 → 01/03	**FCP725**	ATE				
1.9 i	85	01/99 → 01/03				**FCP850**	ATE	
1.9 i	87	07/98 → 01/03	**FCP725**	ATE				
1.9 i	87	07/98 → 01/03				**FCP850**	ATE	
Z4 (E85)								
2.0 i	110	05/04 →	**FCP1300**	ATE				
2.0 i	110	05/04 →				**FCP1301**	ATE	
2.2 i	125	10/03 →	**FCP1300**	ATE				
2.2 i	125	10/03 →				**FCP1301**	ATE	
2.5 i	130	01/06 →	**FCP1300**	ATE				
2.5 i	130	01/06 →				**FCP1301**	ATE	
2.5 i	141	02/03 →	**FCP1300**	ATE				
2.5 i	141	02/03 →				**FCP1301**	ATE	
2.5 si	160	01/06 →	**FCP1300**	ATE				
2.5 si	160	01/06 →				**FCP1301**	ATE	
3.0 i	170	02/03 →	**FCP1300**	ATE				
3.0 i	170	02/03 →				**FCP1301**	ATE	
3.0 si	195	01/06 →	**FCP1300**	ATE				
3.0 si	195	01/06 →				**FCP1301**	ATE	
Z4 Coupe' (E86)								
3.0 si	160	03/06 → 01/09	**FCP1073**	ATE				
3.0 si	160	03/06 → 01/09				**FCP1301**	ATE	
Z4 Roadster (G29)								
Z4 M40i Cabrio	250	11/18 →	**FCP5055**	BREMBO				
Z4 sDrive 20i Cabrio	120	11/18 →	**FCP5055**	BREMBO	For vehicles with M-sport package			
Z4 sDrive 20i Cabrio	145	11/18 →	**FCP5055**	BREMBO	For vehicles with M-sport package			
Z4 sDrive 30i Cabrio	190	11/18 →	**FCP5055**	BREMBO	For vehicles with M-sport package			
Z8								
4.9 Z8	294	01/00 → 12/03	**FCP1001**	ATE				
4.9 Z8	294	01/00 → 12/03				**FCP1483**	ATE	
4.9 Z8	294	06/00 → 06/03	**FCP997**	ATE				
4.9 Z8	294	06/00 → 06/03				**FCP1483**	ATE	
BRISTOL								
Beaufighter								
5.9 (Turbo) 16V	162	01/74 → 12/82	**FCP9**	LUCAS/TRW				
5.9 (Turbo) 16V	162	01/74 → 12/82				**FCP815**	LUCAS/TRW	
Brigand								
5.9 16V	162	01/74 → 12/82	**FCP9**	LUCAS/TRW				
5.9 16V	162	01/74 → 12/82				**FCP815**	LUCAS/TRW	
Britannia								
5.9 16V		01/74 → 12/82	**FCP9**	LUCAS/TRW				
5.9 16V		01/74 → 12/82				**FCP815**	LUCAS/TRW	

For material availability see page 16-18 / Per la disponibilità materiali vedere a pagina 16-18

	kW				NOTE			NOTE
BUICK								
Century								
5.7 16V	114	01/73 → 12/76	FRP3057	KELGATE				
Electra								
2.8	86	01/72 → 12/84	FRP3057	KELGATE				
5.0 16V	100, 123	01/72 → 12/84	FRP3057	KELGATE				
5.7 16V	114	01/72 → 12/84	FRP3057	KELGATE				
5.7 16V	125	01/72 → 12/84	FRP3057	KELGATE				
5.7 16V	127	01/72 → 12/84	FRP3057	KELGATE				
Estate Wagon								
5.7 16V	112, 125	01/72 → 12/90	FRP3057	KELGATE				
Le Sabre								
5.0 16V	123	01/72 → 12/85	FRP3057	KELGATE				
5.7 16V	114	01/72 → 12/85	FRP3057	KELGATE				
5.7 16V	125	01/72 → 12/85	FRP3057	KELGATE				
5.7 16V	93	01/72 → 12/85	FRP3057	KELGATE				
6.6 16V	138	01/72 → 12/85	FRP3057	KELGATE				
Riviera								
5.7 16V	118	01/72 → 12/78	FRP3057	KELGATE				
5.7 16V	118	01/72 → 12/78				FRP3057	KELGATE	
6.6 16V	105	01/72 → 12/78	FRP3057	KELGATE				
6.6 16V	105	01/72 → 12/78				FRP3057	KELGATE	
7.5 16V	140	01/72 → 12/78	FRP3057	KELGATE				
7.5 16V	140	01/72 → 12/78				FRP3057	KELGATE	
Roadmaster								
5.0 16V	154	01/91 → 12/96	FRP3057	KELGATE				
5.7 16V	191	01/91 → 12/96	FRP3057	KELGATE				
Royal								
5.7 16V		01/73 → 12/76	FRP3057	KELGATE				
Skylark								
2.8	86	01/76 → 12/79	FRP3057	KELGATE				
CADILLAC								
ATS								
3.6 V	346	09/15 →	FRP3133	BREMBO				
ATS Coupe								
3.6 V	346	09/15 →	FRP3133	BREMBO				
BLS								
1.9 D	110	04/06 →				FCP1931	ATE	
1.9 D	132	12/07 →				FCP1931	ATE	
2.0 T	129	04/06 →				FCP1931	ATE	
2.0 T	154	04/06 →				FCP1931	ATE	
2.0 T AWD	154	04/06 →				FCP1931	ATE	
2.0 T Flexpower	147	12/07 →				FCP1931	ATE	
2.8 T	188	04/06 →				FCP1931	ATE	
2.8 T AWD	206	10/08 →				FCP1931	ATE	
BLS Wagon								
1.9 D	110	12/07 →				FCP1931	ATE	
1.9 D	132	12/07 →				FCP1931	ATE	
2.0 T	129	12/07 →				FCP1931	ATE	
2.0 T	154	12/07 →				FCP1931	ATE	
2.0 T AWD	154	12/07 →				FCP1931	ATE	
2.0 T Flexpower	147	12/07 →				FCP1931	ATE	
2.8 T	188	12/07 →				FCP1931	ATE	
2.8 T	206	08/10 →				FCP1931	ATE	
2.8 T AWD	206	10/08 →				FCP1931	ATE	
Brougham								
4.1		01/72 → 12/95	FRP3057	KELGATE				
5.0		01/72 → 12/95	FRP3057	KELGATE				
7.0 16V		01/72 → 12/95	FRP3057	KELGATE				
8.2		01/72 → 12/95	FRP3057	KELGATE				

For material availability see page 16-18 / Per la disponibilità materiali vedere a pagina 16-18

FERODO RACING
Updated on November 2020

	kW				NOTE			NOTE
...CADILLAC								
Commercial								
		01/75 → 12/84	FRP3057	KELGATE				
CTS								
2.0 Turbo	203	09/13 →	FCP1334	BREMBO	Brake Type J55			
2.0 Turbo AWD	203	01/14 →	FCP1334	BREMBO	Brake Type J55			
6.2	415	01/09 →	FRP3133	BREMBO				
CTS Coupe								
6.2 V	415	01/08 →	FRP3133	BREMBO				
CTS Sport Wagon								
6.2	415	09/11 →	FRP3133	BREMBO				
Deville								
4.1 16V	92	01/72 → 12/84	FRP3057	KELGATE				
6.0 16V	108	01/72 → 12/84	FRP3057	KELGATE				
7.0 16V	133	01/72 → 12/84	FRP3057	KELGATE				
Heavy duty drum brake		01/90 → 12/98	FCP1213	KELGATE				
Eldorado								
5.7 16V	130, 136	01/69 → 12/78	FRP3057	KELGATE				
6.0 16V	115	01/69 → 12/78	FRP3057	KELGATE				
7.0 16V	133	01/69 → 12/78	FRP3057	KELGATE				
8.2 16V	140	01/69 → 12/78	FRP3057	KELGATE				
Escalade								
		01/99 → 12/00	FCP1213	KELGATE				
Fleetwood								
5.7 16V	194	01/96 → 12/96	FRP3057	KELGATE				
Fleetwood Brougham								
4.5 16V		01/85 → 12/90	FRP3057	KELGATE				
5.7 16V	175, 194	01/85 → 12/90	FRP3057	KELGATE				
6.0 16V		01/85 → 12/90	FRP3057	KELGATE				
All models		01/90 → 12/93	FCP1213	KELGATE				
Seville								
5.7 16V	66, 136	01/76 → 12/79	FRP3057	KELGATE				
6.0 16V	108	01/76 → 12/79	FRP3057	KELGATE				
CATERHAM								
21 models								
Convertible 1.6 i	86	10/94 →	FCP167	LUCAS/TRW				
Convertible 1.6 i	86	10/94 →				FCP408	LUCAS/TRW	
Convertible 1.6 i Supersport	103	10/94 →	FCP167	LUCAS/TRW				
Convertible 1.6 i Supersport	103	10/94 →				FCP408	LUCAS/TRW	
Convertible 1.8 i	140	10/94 →	FCP167	LUCAS/TRW				
Convertible 1.8 i	140	10/94 →				FCP408	LUCAS/TRW	
stock AP up-grade								
		01/97 →	FRP201					
		01/97 →				FCP825	LOCKHEED	
Super Seven								
Convertible 1.4 i	97	01/90 → 12/96	FCP167	LUCAS/TRW				
Convertible 1.4 i	97	01/90 → 12/96				FCP408	LUCAS/TRW	
Convertible 1.4 i	97	01/97 →	FCP809	LUCAS/TRW				
Convertible 1.4 i	97	01/97 →				FCP408	LUCAS/TRW	
Convertible 1.6	74	01/90 → 12/96	FCP167	LUCAS/TRW				
Convertible 1.6	74	01/90 → 12/96				FCP408	LUCAS/TRW	
Convertible 1.6	74	01/97 →	FCP809	LUCAS/TRW				
Convertible 1.6	74	01/97 →				FCP408	LUCAS/TRW	
Convertible 1.6 i	103	01/90 → 12/96	FCP167	LUCAS/TRW				
Convertible 1.6 i	103	01/90 → 12/96				FCP408	LUCAS/TRW	
Convertible 1.6 i	103	01/97 →	FCP809	LUCAS/TRW				
Convertible 1.6 i	103	01/97 →				FCP408	LUCAS/TRW	
Convertible 1.6 Turbo	110	01/90 → 12/96	FCP167	LUCAS/TRW				
Convertible 1.6 Turbo	110	01/90 → 12/96				FCP408	LUCAS/TRW	
Convertible 1.6 Turbo	110	01/97 →	FCP809	LUCAS/TRW				
Convertible 1.6 Turbo	110	01/97 →				FCP408	LUCAS/TRW	
Convertible 1.7	99	01/90 → 12/96	FCP167	LUCAS/TRW				

For material availability see page 16-18 / Per la disponibilità materiali vedere a pagina 16-18

	kW				NOTE			NOTE
...CATERHAM								
...Super Seven								
Convertible 1.7	99	01/90 → 12/96				**FCP408**	LUCAS/TRW	
Convertible 1.7	99	01/97 →	**FCP809**	LUCAS/TRW				
Convertible 1.7	99	01/97 →				**FCP408**	LUCAS/TRW	
Convertible 1.8 i	112	01/98 → 12/01	**FCP167**	LUCAS/TRW				
Convertible 1.8 i	112	01/98 → 12/01				**FCP408**	LUCAS/TRW	
Convertible 1.8 i 16v	171	01/99 →	**FCP167**	LUCAS/TRW				
Convertible 1.8 i 16v	171	01/99 →				**FCP408**	LUCAS/TRW	
Convertible 2.0i	121	01/90 → 12/96	**FCP167**	LUCAS/TRW				
Convertible 2.0i	121	01/90 → 12/96				**FCP408**	LUCAS/TRW	
Convertible 2.0i	121	01/97 →	**FCP809**	LUCAS/TRW				
Convertible 2.0i	121	01/97 →				**FCP408**	LUCAS/TRW	
CHEVROLET								
Astra Hatchback								
2.0 DTi	74	08/02 →	**FCP1295**	ATE				
2.0 DTi	74	08/02 →				**FCP1521**	LUCAS/TRW	
Astra Saloon								
2.0 DTi GLS	74	08/02 → 12/11	**FCP1295**	ATE				
2.0 DTi GLS	74	08/02 → 12/11				**FCP1521**	LUCAS/TRW	
Astra Van								
4.3		01/91 → 12/94	**FRP3057**	KELGATE				
4.3 not 4WD		01/85 → 12/90	**FRP3057**	KELGATE				
AVEO Hatchback (T300)								
1.2	51	03/11 →	**FCP4262**	MANDO				
1.2	63	03/11 →	**FCP4262**	MANDO				
1.2 LPG	63	11/12 →	**FCP4262**	MANDO				
1.3 D	55	07/11 →	**FCP4262**	MANDO				
1.3 D	70	07/11 →	**FCP4262**	MANDO				
1.4	74	03/11 →	**FCP4262**	MANDO				
1.4 Turbo	103	08/13 →	**FCP4262**	MANDO				
1.6	85	03/11 →	**FCP4262**	MANDO				
AVEO Saloon (T300)								
1.2	51	03/11 →	**FCP4262**	MANDO				
1.2	63	03/11 →	**FCP4262**	MANDO				
1.2 LPG	63	11/12 →	**FCP4262**	MANDO				
1.3 D	55	07/11 →	**FCP4262**	MANDO				
1.3 D	70	07/11 →	**FCP4262**	MANDO				
1.4	74	07/11 →	**FCP4262**	MANDO				
1.6	85	03/11 →	**FCP4262**	MANDO				
Belair								
		01/69 → 12/72	**FRP3057**	KELGATE				
Camaro								
6.2	298	01/12 → 12/15	**FRP3133**	BREMBO				
6.2	318	01/12 → 12/15	**FRP3133**	BREMBO				
6.2	339	09/15 →	**FCP1334**	BREMBO	Brake Type J55			
6.2	339	09/15 →	**FCP1348**	BREMBO				
6.2 (LT1)	333	06/16 →	**FCP1334**	BREMBO				
6.2L ZL1	485	01/16 → 12/18	**FCP5030**	BREMBO	Not for vehicles with ceramic discs			
6.2L ZL1	485	01/16 → 12/18				**FCP1348**	BREMBO	
6.2L ZL1 1LE	485	01/18 →	**FCP5030**	BREMBO	For vehicles without ceramic discs			
6.2L ZL1 1LE	485	01/18 →				**FCP1348**	BREMBO	
7.0 Z 28	377	09/14 → 12/15	**FCP5030**	BREMBO	For vehicles without ceramic discs			
Coupe (1SS & 2SS)		01/10 →	**FCP1334**	BREMBO				
Coupe (1SS & 2SS)		01/10 →				**FCP721**	BREMBO	
GT4 R		01/18 →	**FRP3153**	BREMBO				
GT4 R		01/18 →				**FRP3137**	BREMBO	
Camaro (6th gen)								
6.2 SS 1LE		01/16 →	**FRP3133**	BREMBO				
6.2 SS 1LE		01/16 →				**FRP3137**	BREMBO	
Camaro Convertible								
6.2	298	01/12 →	**FRP3133**	BREMBO				
6.2	318	01/12 →	**FRP3133**	BREMBO				

For material availability see page 16-18 / Per la disponibilità materiali vedere a pagina 16-18

...CHEVROLET	kW				NOTE			NOTE
Camaro,berlinetta,Iroc,Z28								
		01/69 → 12/81	**FRP3057**	KELGATE				
		01/82 → 12/88	**FRP3058**	KELGATE				
		01/82 → 12/88				**FRP3058**	KELGATE	
		01/88 → 12/89	**FRP3058**	KELGATE				
		01/89 → 12/92	**FRP3058**	KELGATE				
Caprice								
	112	01/77 → 12/96	**FRP3057**	KELGATE				
Chevy 2, nova								
		01/79 → 12/84	**FRP3057**	KELGATE				
		01/85 → 12/88	**FCP308**	KELGATE				
Corsa Estate								
1.6 GLS	68	08/97 → 07/02	**FCP1293**	ATE	256mm disc			
1.6 GLS	68	08/97 → 07/02	**FCP1295**	ATE	280mm disc			
1.6 GLS	68	08/97 → 07/02				**FCP1521**	LUCAS/TRW	
1.7 D	44	08/00 → 07/02	**FCP1293**	ATE				
1.7 D	44	08/00 → 07/02				**FCP1521**	LUCAS/TRW	
Corsa Saloon								
1.6 GLS	68	08/94 → 07/02	**FCP1293**	ATE	256mm disc			
1.6 GLS	68	08/94 → 07/02	**FCP1295**	ATE	280mm disc			
1.6 GLS	68	08/94 → 07/02				**FCP1521**	LUCAS/TRW	
1.6 GS	75	08/97 → 07/02	**FCP1293**	ATE	256mm disc			
1.6 GS	75	08/97 → 07/02	**FCP1295**	ATE	280mm disc			
1.6 GS	75	08/97 → 07/02				**FCP1521**	LUCAS/TRW	
1.7 D	44	08/00 → 07/02	**FCP1293**	ATE				
1.7 D	44	08/00 → 07/02				**FCP1521**	LUCAS/TRW	
Corvette								
C5		01/97 → 12/01	**FCP1553**	KELGATE				
C5		01/97 → 12/01				**FCP1563**	KELGATE	
C6 6.0	298	01/04 →	**FRP3094**	PBR	Requires 3 sets			
C6 6.0	298	01/04 →				**FRP3094**	PBR	Requires 2 sets
C7 Stingray (17"&18" versions)		01/13 →	**FCP1334**	BREMBO				
C7 Stingray (17"&18" versions)		01/13 →				**FRP3137**	BREMBO	
J57		01/16 →	**FCP5030**	BREMBO	For vehicles without ceramic discs			
ZR1 Package	312	02/08 →	**FCP5030**	BREMBO	For vehicles without ceramic discs			
ZR1 Package	312	02/08 →				**FCP1563**	KELGATE	Not for European country vehicles
ZR1 Package	476	09/12 → 12/13	**FCP5030**	BREMBO	For vehicles without ceramic discs			
ZR1 Package	476	09/12 → 12/13				**FCP1563**	KELGATE	Not for European country vehicles
Corvette (C6)								
C6.R FIA GT3		01/05 →				**FRP212**	BREMBO	
Corvette (C7)								
6.2	343	04/14 →	**FCP1334**	BREMBO	From 2015, without reinforced brakes			
6.2	343	04/14 →	**FRP3133**	BREMBO	For Z06 equipment			
6.2 Z06	485	09/14 →	**FRP3133**	BREMBO				
Corvette Converible (C7)								
6.2	335	09/13 →	**FCP1334**	BREMBO	From 2015, without reinforced brakes			
6.2	335	09/13 →	**FRP3133**	BREMBO	For Z06 equipment			
6.2	343	04/14 →	**FCP1334**	BREMBO	From 2015, without reinforced brakes			
6.2	343	04/14 →	**FRP3133**	BREMBO	For Z06 equipment			
CRUZE (J300)								
1.4	103	09/10 →	**FCP4262**	MANDO				
1.4	74	07/13 →	**FCP4262**	MANDO				
1.6	80	05/09 →	**FCP4262**	MANDO				
1.6	83	05/09 →	**FCP4262**	MANDO				
1.6	86	12/12 →	**FCP4262**	MANDO				
1.6	89	12/12 →	**FCP4262**	MANDO				
1.6	91	05/09 →	**FCP4262**	MANDO				
1.7 D	96	01/12 →	**FCP4262**	MANDO				
1.7 TD	81	11/13 →	**FCP4262**	MANDO				
1.8	103	11/09 → 12/13	**FCP4262**	MANDO				
1.8	104	05/09 →	**FCP4262**	MANDO				
1.8 LPG	104	06/11 →	**FCP4262**	MANDO				
2.0 CDI	110	05/09 →	**FCP4262**	MANDO				
2.0 CDI	90	05/09 →	**FCP4262**	MANDO				
2.0 CDI	92	05/09 →	**FCP4262**	MANDO				
2.0 CDI	120	08/10 →	**FCP4262**	MANDO				

For material availability see page 16-18 / Per la disponibilità materiali vedere a pagina 16-18



	kW				NOTE			NOTE
...CHEVROLET								
CRUZE Hatchback (J305)								
1.6	80	01/12 →	FCP4262	MANDO				
1.6	91	06/11 →	FCP4262	MANDO				
1.7 D	96	01/12 →	FCP4262	MANDO				
1.8	104	06/11 →	FCP4262	MANDO				
1.8 LPG	104	06/11 →	FCP4262	MANDO				
2.0 CDI	110	01/12 →	FCP4262	MANDO				
2.0 CDI	120	06/11 →	FCP4262	MANDO				
CRUZE Station Wagon (J308)								
1.4	103	08/12 →	FCP4262	MANDO				
1.6	91	08/12 →	FCP4262	MANDO				
1.7 TD	96	08/12 →	FCP4262	MANDO				
1.8	104	08/12 →	FCP4262	MANDO				
2.0 TD	120	08/12 →	FCP4262	MANDO				
Discayne								
		01/69 → 12/92	FRP3057	KELGATE				
Impala								
		01/69 → 12/92	FRP3057	KELGATE				
Iroc								
		01/69 → 12/81	FRP3057	KELGATE				
Monte Carlo,Malibu								
		01/69 → 12/77	FRP3057	KELGATE				
		01/78 → 12/88	FRP3058	KELGATE				
Vectra (F19)								
3.2	155	09/01 → 03/02	FCP1520	ATE				
3.2	155	09/01 → 03/02				FCP1540	ATE	
Z06 Callaway								
R GT3	395	01/16 →	FRP3046	BREMBO				
R GT3	395	01/16 →				FRP3156	BREMBO	
Z28								
		01/70 → 12/81	FRP3057	KELGATE				
Z28 single piston								
		01/89 → 12/92	FRP3058	KELGATE				
CHRYSLER								
300C								
Car 3.0 CRD	160	06/05 →	FCP1954	BOSCH				
Car 3.5	183	09/04 →	FCP1954	BOSCH				
300C (LX)								
2.7	142	09/04 → 11/12	FCP1954	BOSCH				
5.7 SRT8	250	09/04 → 11/12	FCP1954	BOSCH				
300C Touring								
2.7	142	09/04 → 12/10	FCP1954	BOSCH				
5.7	250	09/04 →	FCP1954	BOSCH				
5.7 AWD	250	04/05 →	FCP1954	BOSCH				
Car 3.0 CRD	160	09/05 →	FCP1954	BOSCH				
Car 3.5	183	09/04 →	FCP1954	BOSCH				
Car 3.5 AWD	183	09/04 →	FCP1954	BOSCH				
Concord								
2.7 LX	149	10/97 → 09/03				FCP1521	LUCAS/TRW	
Crossfire								
3.2 i	160	07/03 →	FCP1050	ATE				
3.2 i SRT-6	246	09/04 →	FCP1050	ATE				

For material availability see page 16-18 / Per la disponibilità materiali vedere a pagina 16-18

FERODO RACING
Updated on November 2020

	kW				NOTE			NOTE
...CHRYSLER								
Crossfire (ZH)								
3.2 18v	243	01/05 → 08/06	**FCP1001**	ATE				
CITROEN								
AX								
1.0 10	30, 33	10/86 → 12/98	**FCP535**	ATE				
1.1 11	40, 44	10/86 → 12/98	**FCP535**	ATE				
1.1 GT	40, 44	01/89 → 04/91	**FCP535**	ATE				
1.1 Sport	40, 44	01/88 → 12/91	**FCP535**	ATE				
1.3 Sport	69	01/88 → 12/91	**FCP535**	ATE				
1.4 14	48	10/86 → 03/91	**FCP535**	ATE				
1.4 14	55	04/91 → 07/92	**FCP393**	BENDIX				
1.4 D	39	01/88 → 04/91	**FCP535**	ATE				
1.4 D	53	04/91 → 12/97	**FCP393**	BENDIX				
1.4 GT		09/86 → 10/88	**FCP535**	ATE				
1.4 GT		11/88 → 04/91	**FCP535**	ATE				
1.4 i GTi	66, 69	04/91 → 04/97	**FCP434**	LUCAS/TRW				
1.5 D	42	01/93 → 12/97	**FCP393**	BENDIX				
Berlingo								
1.1	44	07/96 → 07/02	**FCP1112**	LUCAS/TRW				
1.1 i	44	10/01 →	**FCP1399**	BOSCH				
1.4	55	07/96 → 07/02	**FCP1112**	LUCAS/TRW				
1.4 i	55	10/01 →	**FCP1399**	BOSCH				
1.6 i 16V	80	10/00 → 09/01	**FCP1112**	LUCAS/TRW				
1.7 D		09/96 → 07/02	**FCP1112**	LUCAS/TRW				
1.8	44	05/97 → 09/01	**FCP1112**	LUCAS/TRW				
1.8 i	66	05/97 → 09/01	**FCP1112**	LUCAS/TRW				
1.9 D	51	07/96 → 09/01	**FCP1112**	LUCAS/TRW				
1.9 D	51	10/01 →	**FCP1399**	BOSCH				
1.9 D, TD	51	07/96 → 09/01	**FCP1112**	LUCAS/TRW				
2.0 HDi	66	01/00 → 09/01	**FCP1112**	LUCAS/TRW				
2.0 HDi	66	10/01 →	**FCP1399**	BOSCH				
Berlingo Box								
1.6 i 16V	80	10/01 →	**FCP1399**	BOSCH				
Berlingo Multispace								
1.4	55	07/96 → 07/02	**FCP1112**	LUCAS/TRW				
1.8	66	09/96 → 07/02	**FCP1112**	LUCAS/TRW				
1.9 D, TD	51	07/96 → 07/02	**FCP1112**	LUCAS/TRW				
BX								
1.1	35, 40	09/82 → 12/93	**FCP393**	BENDIX				
1.5		07/85 → 12/93	**FCP393**	BENDIX				
1.7 D, RD		07/85 → 12/93	**FCP393**	BENDIX				
1.8	44, 66	09/82 → 12/93	**FCP393**	BENDIX				
1.9	70, 75	09/82 → 12/93	**FCP393**	BENDIX				
1.9 D	47	09/82 → 12/93	**FCP393**	BENDIX				
1.9 GTi 16V		01/87 → 12/94	**FCP393**	BENDIX				
1.9 TD	52	09/82 → 12/93	**FCP393**	BENDIX				
BX (XB-_)								
14	47	01/89 → 12/89	**FCP393**	BENDIX				
14	55	01/89 → 02/93	**FCP393**	BENDIX				
14 E	52	04/83 → 07/89	**FCP393**	BENDIX				
14 E	53	04/83 → 02/93	**FCP393**	BENDIX				
16	53	01/87 → 02/93	**FCP393**	BENDIX				
16	64	07/85 → 02/93	**FCP393**	BENDIX				
16	66	10/82 → 06/88	**FCP393**	BENDIX				
16	76	03/86 → 02/93	**FCP393**	BENDIX				
BX Break (XB-_)								
1.4	52	01/87 → 01/92	**FCP393**	BENDIX				
14	47	01/89 → 12/89	**FCP393**	BENDIX				
14	53	01/86 → 02/93	**FCP393**	BENDIX				
14	55	01/89 → 02/93	**FCP393**	BENDIX				
16	53	09/88 → 12/94	**FCP393**	BENDIX				
16	64	07/85 → 12/94	**FCP393**	BENDIX				
16	66	06/85 → 06/88	**FCP393**	BENDIX				
16	76	03/86 → 12/94	**FCP393**	BENDIX				

For material availability see page 16-18 / Per la disponibilità materiali vedere a pagina 16-18



	kW				NOTE			NOTE
...CITROEN								
C-ELYSEE								
1.2 VTi 72	53	11/12 →	**FCP1399**	Bosch				
1.6 HDI 92	68	11/12 →	**FCP1399**	Bosch				
1.6 VTi 115	85	11/12 →	**FCP1399**	Bosch				
C1								
1.0	50	06/05 →	**FCP1790**	BOSCH				
1.4 HDi	40	06/05 →	**FCP1790**	BOSCH				
C15								
1.0	30	10/84 → 05/88	**FCP393**	BENDIX				
1.0	32, 37	05/88 → 07/96	**FCP434**	LUCAS/TRW				
1.1	35	10/84 → 05/88	**FCP393**	BENDIX				
1.1	35, 44	05/88 → 10/92	**FCP434**	LUCAS/TRW				
1.3	47	10/84 → 05/88	**FCP393**	BENDIX				
1.3 E		05/88 →	**FCP434**	LUCAS/TRW				
1.4	40	10/84 → 05/88	**FCP393**	BENDIX				
1.4	44, 49	05/88 → 10/92	**FCP434**	LUCAS/TRW				
1.8	44	10/84 → 05/88	**FCP393**	BENDIX				
1.8	44	05/88 → 10/92	**FCP434**	LUCAS/TRW				
C2								
1.6 i 16V (Challenge)		09/03 →	**FCP1334**	BREMBO				
1.6 i 16V (Challenge)		09/03 →				**FCP541**	LUCAS/TRW	
1.6 i 16V VTS	90	09/03 →	**FCP1543**	LUCAS/TRW				
1.6 i 16V VTS	90	09/03 →				**FCP541**	LUCAS/TRW	
1.6 i 16V VTS	90	01/04 →	**FCP1399**	BOSCH				
1.6 i 16V VTS	90	01/04 →				**FCP541**	LUCAS/TRW	
C2 (JM_)								
1.4	54	09/03 →	**FCP1543**	LUCAS/TRW				
1.4	55	10/06 →	**FCP1543**	LUCAS/TRW				
1.4 16V	65	06/06 →	**FCP1543**	LUCAS/TRW				
1.4 HDi	50	09/03 →	**FCP1543**	LUCAS/TRW	Not for rim size 16inch			
1.6	80	09/03 →	**FCP1543**	LUCAS/TRW	Not for rim size 16inch			
C2 ENTERPRISE								
1.4 HDi	50	04/09 →	**FCP1543**	LUCAS/TRW				
C2 R2								
1.6 16V (Gravel)		01/09 →	**FCP1348**	BREMBO				
1.6 16V (Gravel)		01/09 →				**FCP809**	LUCAS/TRW	
1.6 16V (Tarmac)		01/09 →	**FCP1334**	BREMBO				
1.6 16V (Tarmac)		01/09 →				**FCP809**	LUCAS/TRW	
C3 (FC_)								
1.4 Bioflex	60	01/09 →	**FCP1399**	Bosch				
C3 I (FC_)								
1.4 16V	65	12/03 →	**FCP1543**	LUCAS/TRW				
1.4 16V HDi	66	02/02 →	**FCP1543**	LUCAS/TRW				
1.4 16V HDi	66	02/02 →				**FCP541**	LUCAS/TRW	
1.6 16V	80	02/02 →	**FCP1543**	LUCAS/TRW				
1.6 16V	81	05/03 → 05/05	**FCP1543**	LUCAS/TRW				
1.6 16V HDi	66	10/05 →	**FCP1543**	LUCAS/TRW				
1.6 16V HDi	66	10/05 →				**FCP541**	LUCAS/TRW	
C3 II								
1.0 VTi 68	50	08/12 →	**FCP1399**	Bosch				
1.0 VTi 68	50	08/12 →				**FCP1491**	LUCAS/TRW	
1.1 BiFuel	44	11/10 →	**FCP1399**	Bosch				
1.2 VTi 82	60	06/12 →	**FCP1399**	Bosch				
1.2 VTi 82	60	06/12 →				**FCP1491**	LUCAS/TRW	
1.4	54	11/09 →	**FCP1399**	Bosch				
1.4 HDi 70	50	11/09 →	**FCP1399**	Bosch				
1.4 VTi 95	70	11/09 →	**FCP1399**	Bosch				
1.6 HDi	68	11/09 →	**FCP1399**	Bosch				
1.6 HDi	68	11/09 →				**FCP1491**	LUCAS/TRW	
1.6 HDi 110	82	11/09 →	**FCP1399**	Bosch				
1.6 HDi 110	82	11/09 →				**FCP1491**	LUCAS/TRW	
1.6 HDi 115	84	09/12 →	**FCP1399**	Bosch	to Contr.No. 12270			
1.6 HDi 115	84	09/12 →				**FCP1491**	LUCAS/TRW	
1.6 HDi 90	66	11/09 →	**FCP1399**	Bosch				
1.6 HDi 90	66	11/09 →				**FCP1491**	LUCAS/TRW	

For material availability see page 16-18 / Per la disponibilità materiali vedere a pagina 16-18

FERODO RACING
Updated on November 2020



kW

...CITROEN

					NOTE			NOTE
C3 Picasso								
1.4 VTi 95	70	02/09 →	**FCP1399**	Bosch				
1.4 VTi 95	70	02/09 →				**FCP1491**	LUCAS/TRW	
1.4 VTi 95 LPG	70	01/12 →	**FCP1399**	Bosch				
1.4 VTi 95 LPG	70	01/12 →				**FCP1491**	LUCAS/TRW	
1.6 HDi	66	02/09 →	**FCP1399**	Bosch				
1.6 HDi	66	02/09 →				**FCP1491**	LUCAS/TRW	
1.6 HDi 110	82	05/10 →	**FCP1399**	Bosch				
1.6 HDi 110	82	05/10 →				**FCP1491**	LUCAS/TRW	
1.6 HDI 90	68	07/10 →	**FCP1399**	Bosch				
1.6 HDI 90	68	07/10 →				**FCP1491**	LUCAS/TRW	
C3 Pluriel (HB_)								
1.4	54	05/03 →	**FCP1543**	LUCAS/TRW				
1.4 HDi	50	04/04 →	**FCP1543**	LUCAS/TRW				
1.4 HDi	50	04/04 →				**FCP541**	LUCAS/TRW	
1.4 Hybrid	54	05/05 →	**FCP1543**	LUCAS/TRW				
1.6	80	05/03 →	**FCP1543**	LUCAS/TRW				
1.6	80	05/03 →				**FCP541**	LUCAS/TRW	
C4								
1.4 i 16V	65	12/04 →	**FCP1399**	BOSCH				
1.6 HDi 16V	66	12/04 →	**FCP1399**	BOSCH				
1.6 i 16V	80	12/04 →	**FCP1399**	BOSCH				
C4 Picasso								
2.0 Hdi	100	02/07 →	**FCP1641**	ATE				
Dispatch								
1.6	58	10/95 →	**FCP565**	LUCAS/TRW				
1.9 D		10/95 →	**FCP565**	LUCAS/TRW				
1.9 TD	68	08/96 →	**FCP565**	LUCAS/TRW				
2.0		01/94 → 07/96	**FCP565**	LUCAS/TRW				
2.0 TD		08/96 →	**FCP565**	LUCAS/TRW				
DS3								
1.2 VTi 82	60	01/13 →	**FCP1399**	Bosch	266mm disc			
1.2 VTi 82	60	01/13 →				**FCP1491**	LUCAS/TRW	
1.4 HDi 70	50	04/10 →	**FCP1399**	BOSCH	266mm disc			
1.4 HDi 70	50	04/10 →				**FCP1491**	LUCAS/TRW	
1.4 VTi 95	70	04/10 →	**FCP1399**	BOSCH	266mm disc			
1.4 VTi 95	70	04/10 →				**FCP1491**	LUCAS/TRW	
1.4 VTi 95 LPG	70	08/12 →	**FCP1399**	BOSCH	266mm disc			
1.4 VTi 95 LPG	70	08/12 →				**FCP1491**	LUCAS/TRW	
1.6 HDi 110	82	09/11 →	**FCP1399**	BOSCH	266mm disc			
1.6 HDi 110	82	09/11 →				**FCP1491**	LUCAS/TRW	
1.6 HDi 90	68	11/09 → 01/10	**FCP1399**	BOSCH	266mm disc			
1.6 HDi 90	68	11/09 → 01/10				**FCP1491**	LUCAS/TRW	
1.6 Racing	149	02/11 →	**FCP1348**	Brembo				
1.6 Racing	149	02/11 →	**FCP1399**	BOSCH	266mm disc			
1.6 Racing	149	02/11 →				**FCP1491**	LUCAS/TRW	
1.6 Racing	152	02/11 →	**FCP1348**	Brembo				
1.6 Racing	152	02/11 →	**FCP1399**	BOSCH	266mm disc			
1.6 Racing	152	02/11 →				**FCP1491**	LUCAS/TRW	
1.6 THP 150	110	06/10 →	**FCP1399**	BOSCH	266mm disc			
1.6 THP 150	110	06/10 →				**FCP1491**	LUCAS/TRW	
1.6 THP 155	115	06/10 →	**FCP1348**	BREMBO	323mm discs			
1.6 THP 155	115	06/10 →	**FCP1399**	BOSCH	266mm disc			
1.6 THP 155	115	06/10 →				**FCP1491**	LUCAS/TRW	
1.6 VTi 120	88	06/10 →	**FCP1399**	BOSCH	266mm disc			
1.6 VTi 120	88	06/10 →				**FCP1491**	LUCAS/TRW	
R1	92	10/12 →	**FCP1399**	BOSCH				
R1	92	10/12 →				**FCP1491**	LUCAS/TRW	
DS3 Convertible								
1.2 VTi 82	60	01/13 →	**FCP1399**	Bosch	266mm disc			
1.6 HDi 90	69	01/13 →	**FCP1399**	Bosch	266mm disc			
1.6 HDi 90	69	01/13 →				**FCP1491**	LUCAS/TRW	
1.6 THP 155	115	01/13 →	**FCP1399**	Bosch	266mm disc			
1.6 THP 155	115	01/13 →	**FRP1077**	ALCON	4 pist.caliper: 330x30(asphalt) & 300x30(gravel)			
1.6 THP 155	115	01/13 →				**FCP809**	LUCAS/TRW	2 piston caliper:300x8mm discs
1.6 THP 155	115	01/13 →				**FCP1491**	LUCAS/TRW	
1.6 VTi 120	88	01/13 →	**FCP1399**	Bosch	266mm disc			
1.6 VTi 120	88	01/13 →				**FCP1491**	LUCAS/TRW	

For material availability see page 16-18 / Per la disponibilità materiali vedere a pagina 16-18

...CITROEN

	kW				NOTE			NOTE
DS3 R5								
1.6 EP6 CDT	206	01/14 →	FRP1077	ALCON	4 pist.caliper: 355(asphalt) & 300(gravel)			
1.6 EP6 CDT	206	01/14 →				FRP1077	ALCON	4 pist.caliper: 355(asphalt) & 300(gravel)
Evasion								
1.9 TD	66	10/95 →	FCP565	LUCAS/TRW				
2.0	89	10/95 →	FCP565	LUCAS/TRW				
2.0 (Turbo)	108	10/95 →	FCP565	LUCAS/TRW				
2.0 (Turbo)	108	10/95 →				FCP850	ATE	
2.0 HDi	80	09/99 →	FCP565	LUCAS/TRW				
2.0 HDi	80	09/99 →				FCP850	ATE	
2.1 TD	80	06/96 →	FCP565	LUCAS/TRW				
2.1 TD	80	06/96 →				FCP850	ATE	
Jumpy								
1.6 900Kg	58	10/95 →	FCP565	LUCAS/TRW				
1.9 D 900Kg		10/95 →	FCP565	LUCAS/TRW				
1.9 TD 900Kg		10/95 →	FCP565	LUCAS/TRW				
2.0 TD 900 Kg	100	01/00 →	FCP565	LUCAS/TRW				
LN								
0.6 3 CV	23	08/77 → 10/81	FCP72	BENDIX				
0.7 4 CV	24	10/76 → 08/77	FCP72	BENDIX				
0.7 4 CV	24	08/77 → 10/81	FCP72	BENDIX				
LNA								
0.7		01/76 → 12/79	FCP72	BENDIX				
1.0		01/76 → 12/79	FCP72	BENDIX				
1.1		01/76 → 12/79	FCP72	BENDIX				
Saxo								
1.0	37	02/96 → 04/02	FCP535	ATE				
1.1	40	02/96 → 04/02	FCP393	BENDIX				
1.1	40	02/96 → 04/02	FCP535	ATE				
1.4	55	02/96 → 04/02	FCP393	BENDIX				
1.5 D	42	05/96 → 04/02	FCP393	BENDIX				
1.6	66	02/96 → 04/02	FCP393	BENDIX				
1.6	66	02/96 → 04/02	FCP876	ATE				
1.6 16V	87	02/96 → 04/02	FCP876	ATE				
1.6 16V	87	02/96 → 04/02				FCP558	BENDIX	
1.6 Challenge		02/96 →	FRP218					
1.6 Challenge		02/96 →				FCP558	BENDIX	
1.6 Cup		02/96 → 12/00	FCP1133	LUCAS/TRW				
1.6 Cup		02/96 → 12/00				FCP558	BENDIX	
1.6 Kit car, Super 1600	155	01/97 →	FRP302					
1.6 Kit car, Super 1600	155	01/97 →				FCP810	LUCAS/TRW	
1.6 T4 Trophy		01/00 →	FCP1378	BOSCH				
1.6 T4 Trophy		01/00 →				FCP1378	BOSCH	
Synergie								
1.9 TD	66	10/95 →	FCP565	LUCAS/TRW				
2.0 (Turbo)		10/95 →	FCP565	LUCAS/TRW				
2.0 (Turbo)		10/95 →				FCP850	ATE	
2.0 HDi	80	09/99 →	FCP565	LUCAS/TRW				
2.0 HDi	80	09/99 →				FCP850	ATE	
2.1 TD		01/96 →	FCP565	LUCAS/TRW				
2.1 TD		01/96 →				FCP850	ATE	
Visa								
0.6 / 1.0 / 11 E / 14	25	09/78 → 03/91	FCP253	CITROEN				
0.7	26	09/78 → 12/88	FCP72	BENDIX				
1.0	30	04/81 → 12/88	FCP72	BENDIX				
1.1	35	07/80 → 12/88	FCP72	BENDIX				
1.1	37	07/80 → 12/88	FCP72	BENDIX				
1.1	42	07/80 → 12/88	FCP72	BENDIX				
1.2		01/79 → 12/88	FCP72	BENDIX				
1.4		01/79 → 12/88	FCP72	BENDIX				
1.6		01/79 → 12/88	FCP72	BENDIX				
1.6 i GTi	76, 83	01/85 → 12/88	FCP434	LUCAS/TRW				
1.7 D	44	03/84 → 12/88	FCP434	LUCAS/TRW				
II Super X	47	07/80 → 06/82	FCP253	CITROEN				

For material availability see page 16-18 / Per la disponibilità materiali vedere a pagina 16-18

FERODO RACING
Updated on November 2020

...CITROEN	kW				NOTE			NOTE
Visa Cabriolet								
11 RE	37	03/83 → 10/88	**FCP253**	CITROEN				
Xsara								
1.4 i Saloon	55	09/00 →	**FCP1399**	BOSCH				
1.4 i Saloon	55	09/97 → 09/00	**FCP876**	ATE	ABS			
1.4 i Saloon	55	09/97 → 09/00	**FCP1378**	BOSCH				
1.4 i Saloon	55	09/97 → 09/00				**FCP558**	BENDIX	
1.4 i SW Estate	55	09/97 →	**FCP1112**	LUCAS/TRW	ABS			
1.5 D	42	05/98 → 09/00	**FCP1378**	BOSCH				
1.5 D Break	42	10/97 → 09/00	**FCP1112**	LUCAS/TRW				
1.5 D SW Estate	42	05/98 → 09/00	**FCP1112**	LUCAS/TRW				
1.5 D SW Estate	42	05/98 → 09/00	**FCP1378**	BOSCH				
1.6 Break	65	10/97 → 09/00	**FCP1112**	LUCAS/TRW				
1.6 i	66	05/98 → 08/00	**FCP876**	ATE				
1.6 i	66	05/98 → 08/00				**FCP558**	BENDIX	
1.6 i Saloon	80	09/00 →	**FCP1399**	BOSCH				
1.6 i SW Estate	66	05/98 →	**FCP876**	ATE				
1.8 i Saloon	44	05/98 →	**FCP876**	ATE				
1.8 i Saloon 16V	82	01/98 →	**FCP876**	ATE				
1.8 i SW Estate	44	05/98 →	**FCP1112**	LUCAS/TRW				
1.8 i SW Estate	44	05/98 →				**FCP558**	BENDIX	
1.9 D Saloon	51	09/00 →	**FCP1399**	BOSCH				
1.9 D Saloon	51	01/98 → 09/00	**FCP876**	ATE				
1.9 D Saloon	51	01/98 → 09/00				**FCP558**	BENDIX	
1.9 TD Saloon	51	01/98 →	**FCP876**	ATE				
1.9 TD Saloon	51	01/98 →				**FCP558**	BENDIX	
1.9 TD SW Estate	51	02/98 →	**FCP1112**	LUCAS/TRW				
1.9 TD SW Estate	51	02/98 →				**FCP558**	BENDIX	
2.0 HDi Saloon	66	09/00 →	**FCP1399**	BOSCH				
2.0 HDi Saloon, SW Estate	66	01/99 → 09/00	**FCP1112**	LUCAS/TRW				
2.0 HDi Saloon, SW Estate	66	01/99 → 09/00	**FCP1370**	BOSCH				
2.0 HDi Saloon, SW Estate	66	01/99 → 09/00				**FCP558**	BENDIX	
2.0 i 16V		09/97 →	**FCP1112**	LUCAS/TRW				
2.0 i 16V		09/97 →				**FCP558**	BENDIX	
XSARA (N1)								
2.0 16V	100	09/00 → 03/05	**FCP1063**	LUCAS/TRW				
2.0 16V	120	04/97 → 09/00	**FCP1063**	LUCAS/TRW				
2.0 HDi 109	80	05/01 → 03/05	**FCP1063**	LUCAS/TRW				
XSARA Break (N2)								
1.9 D SW Estate	51	09/00 →	**FCP1112**	LUCAS/TRW				
2.0 16V	100	09/00 → 08/05	**FCP1063**	LUCAS/TRW				
2.0 HDi 109	80	05/01 → 08/05	**FCP1063**	LUCAS/TRW				
XSARA Coupe (N0)								
1.9 D SW Estate	51	09/00 →	**FCP1112**	LUCAS/TRW				
2.0	97	08/98 → 08/00	**FCP1063**	LUCAS/TRW				
2.0 16V	100	09/00 → 03/05	**FCP1063**	LUCAS/TRW				
2.0 HDi 109	80	05/01 → 03/05	**FCP1063**	LUCAS/TRW				
2.0 i 16V	120	02/98 → 03/05	**FCP1063**	LUCAS/TRW				
Xsara Picasso (N68)								
1.6	70	10/01 →	**FCP1399**	BOSCH	for vehicles without ESP			
1.6 HDi	66	10/01 →	**FCP1399**	BOSCH				
1.6 HDi	80	05/04 →	**FCP1399**	BOSCH				
1.6 i	66	06/00 →	**FCP1063**	LUCAS/TRW				
1.6 i	66	10/01 →	**FCP1399**	BOSCH	for vehicles without ESP			
1.8 i 16V	85	02/00 →	**FCP1063**	LUCAS/TRW				
1.8 i 16V	85	10/01 →	**FCP1399**	BOSCH				
2.0 HDi	66	04/00 →	**FCP1063**	LUCAS/TRW				
2.0 HDi	66	10/01 →	**FCP1399**	BOSCH				
2.0 i 16V	100	01/03 →	**FCP1467**	BOSCH				
ZX								
1.1	40, 44	03/91 → 06/92	**FCP393**	BENDIX				
1.1	40, 44	03/91 → 06/92	**FCP845**	LUCAS/TRW				
1.1	40, 44	07/92 → 10/97	**FCP393**	BENDIX				
1.1	40, 44	07/92 → 10/97	**FCP845**	LUCAS/TRW				
1.4	37, 55	03/91 → 06/92	**FCP393**	BENDIX				
1.4	37, 55	03/91 → 06/92	**FCP845**	LUCAS/TRW				
1.4	37, 55	07/92 → 10/97	**FCP393**	BENDIX				
1.4	37, 55	07/92 → 10/97	**FCP845**	LUCAS/TRW				
1.6	65, 66	03/91 → 06/92	**FCP393**	BENDIX				
1.6	65, 66	03/91 → 06/92	**FCP845**	LUCAS/TRW				
1.6	65, 66	07/92 → 10/97	**FCP393**	BENDIX				

For material availability see page 16-18 / Per la disponibilità materiali vedere a pagina 16-18

		kW				NOTE			NOTE
...CITROEN									
...ZX									
1.6		65, 66	07/92 → 10/97	FCP845	LUCAS/TRW				
1.8		76, 82	10/92 → 10/97	FCP393	BENDIX				
1.8		76, 82	10/92 → 10/97	FCP845	LUCAS/TRW				
1.8 D		44	10/92 → 10/97	FCP393	BENDIX				
1.8 D		44	10/92 → 10/97	FCP845	LUCAS/TRW				
1.9 D		47	10/91 → 06/92	FCP393	BENDIX				
1.9 D		47	10/91 → 06/92	FCP434	LUCAS/TRW				
1.9 D		47	07/92 → 06/94	FCP393	BENDIX				
1.9 D		47	07/92 → 06/94	FCP434	LUCAS/TRW				
1.9 D SW Estate		47	01/94 → 10/97	FCP393	BENDIX				
1.9 D SW Estate		47	01/94 → 10/97	FCP434	LUCAS/TRW				
1.9 TD Volcane			03/91 → 06/92	FCP393	BENDIX				
1.9 TD Volcane			03/91 → 06/92	FCP845	LUCAS/TRW				
1.9 TD Volcane			03/91 → 06/92				FCP558	BENDIX	ABS
1.9 TD Volcane			07/92 → 06/94	FCP393	BENDIX				
1.9 TD Volcane			07/92 → 06/94	FCP845	LUCAS/TRW				
1.9 TD Volcane			07/92 → 06/94				FCP558	BENDIX	ABS
1.9 Volcane			03/91 → 06/92	FCP393	BENDIX				
1.9 Volcane			03/91 → 06/92	FCP845	LUCAS/TRW				
1.9 Volcane			03/91 → 06/92				FCP558	BENDIX	ABS
1.9 Volcane			07/92 → 06/94	FCP393	BENDIX				
1.9 Volcane			07/92 → 06/94	FCP845	LUCAS/TRW				
1.9 Volcane			07/92 → 06/94				FCP558	BENDIX	ABS
2.0 Volcane		89	01/92 → 10/97	FCP845	LUCAS/TRW				
2.0 Volcane		89	01/92 → 10/97				FCP558	BENDIX	
ZX (N2)									
2.0		122	09/96 → 10/97	FCP1063	LUCAS/TRW				
2.0 i 16V		110	06/94 → 06/97	FCP1133	LUCAS/TRW				
2.0 i 16V		110	06/94 → 06/97				FCP558	BENDIX	
2.0 i 16V		112	07/92 → 10/94	FCP1133	LUCAS/TRW				
2.0 i 16V		112	07/92 → 10/94				FCP558	BENDIX	
2.0 i 16V		120	05/96 → 06/97	FCP1063	LUCAS/TRW				
2.0 i 16V		120	05/96 → 06/97	FCP1133	LUCAS/TRW				
2.0 i 16V		120	05/96 → 06/97				FCP558	BENDIX	
DACIA									
Denem									
1.3		40	10/82 → 12/85	FCP72	BENDIX				
Duster									
1.4		48	04/84 → 08/88	FCP72	BENDIX				
1.4		48	09/88 →	FCP72	BENDIX				
1.6			12/88 →	FCP72	BENDIX				
Logan									
1.2 16v (LS1N)		55	02/06 →	FCP845	LUCAS/TRW				
1.6 16v (LS0L/LS0M)		77	01/06 →	FCP845	LUCAS/TRW				
Logan (LS_)									
1.4 (LSOA, LSOC, LSOE, LSOG)		55	09/04 →	FCP845	LUCAS/TRW				
1.5 dCi (LS0J, LS0Y)		48	09/05 →	FCP845	LUCAS/TRW				
1.5 dCi (LS0K)		50	01/06 →	FCP845	LUCAS/TRW				
1.5 dCi (LS0W)		63	09/07 →	FCP845	LUCAS/TRW				
1.6 8v (LS0B/LS0D/LS0F/LS0H)		64	08/04 →	FCP845	LUCAS/TRW				
Nova									
1.6			01/96 →	FCP72	BENDIX				
Sandero									
1.2 16v (BS1N)		55	11/08 →	FCP845	LUCAS/TRW				
1.4		55	06/08 →	FCP845	LUCAS/TRW				
1.4 MPI LPG		53	01/09 →	FCP845	LUCAS/TRW				
1.5 dCi		50	11/08 →	FCP845	LUCAS/TRW				
1.6 8v (BS0B/BS0D/BS0F/BS0H)		64	12/07 →	FCP845	LUCAS/TRW				
Super Nova									
1.4			01/00 →	FCP72	BENDIX				

For material availability see page 16-18 / Per la disponibilità materiali vedere a pagina 16-18

FERODO RACING
Updated on November 2020

	kW				NOTE			NOTE
DAEWOO								
Espero								
1.5 i GLXi 16V		04/95 →	**FCP584**	ATE				
1.8 i CDi		04/95 →	**FCP584**	ATE				
2.0 i CDXi		04/95 →	**FCP584**	ATE				
Korando								
2.3	103	01/99 →	**FCP600**	SUMITOMO				
Lanos								
1.5 SOHC		09/97 →	**FCP732**	ATE	13" Wheel			
1.6 DOHC 16V		09/97 →	**FCP584**	ATE	14" Wheel			
Nexia								
1.5 i GLi	55	04/95 → 08/97	**FCP173**	GM	Far East			
1.5 i GLi	55	04/95 → 08/97	**FCP732**	ATE				
1.5 i GLXi 16V	66	04/95 → 08/97	**FCP173**	GM	Far East			
1.5 i GLXi 16V	66	04/95 → 08/97	**FCP584**	ATE				
1.5 i GLXi 16V	66	04/95 → 08/97	**FCP732**	ATE				
1.8 i		10/95 → 08/97	**FCP732**	ATE				
DAF								
55								
1.1	34	01/68 → 12/75	**FCP3**	ATE				
66								
1.1	34	01/72 → 12/75	**FCP3**	ATE				
1.3	42	01/72 → 12/75	**FCP3**	ATE				
DAIHATSU								
Sirion								
1.0 , 4WD	40	04/98 →	**FCP1501**	AKEBONO				
1.3	75	09/00 →	**FCP1501**	AKEBONO				
YRV								
1.3 i , 4WD	64	02/01 →	**FCP1501**	AKEBONO				
DKW								
F12								
	30	01/63 → 12/65	**FCP3**	ATE				
DODGE								
Avenger								
All (US)		01/95 →	**FCP765**	AKEBONO				
Light Van								
1.1 (UK)		01/76 → 12/83	**FCP3**	ATE				
Stealth								
		01/91 → 12/96	**FCP765**	AKEBONO				
Viper								
8.0 (US)		01/92 → 12/99	**FCP721**	BREMBO				
8.0 (US)		01/92 → 12/99				**FCP878**	BREMBO	
SRT GT3 R	500	01/13 → 12/17	**FRP3153**	BREMBO				
SRT GT3 R	500	01/13 → 12/17				**FRP3156**	BREMBO	

For material availability see page 16-18 / Per la disponibilità materiali vedere a pagina 16-18

FERRARI	kW				NOTE			NOTE
206								
		01/67 → 12/68	**FCP9**	LUCAS/TRW				
		01/67 → 12/68				**FCP815**	LUCAS/TRW	
208								
2.0 (Turbo) GTB, GTS 16V	162	01/82 → 12/88	**FCP256**	ATE				
2.0 (Turbo) GTB, GTS 16V	162	01/82 → 12/88				**FCP206**	ATE	
2.0 GTB, GTS 16V	114	04/75 → 07/85	**FCP256**	ATE				
2.0 GTB, GTS 16V	114	04/75 → 07/85				**FCP206**	ATE	
246								
2.4 GT		01/71 → 12/75	**FCP11**	ATE				
308								
DINO GT4	188	02/74 → 06/80	**FCP11**	ATE				
DINO GT4	188	02/74 → 06/80				**FCP2**	ATE	
GTB	188	09/75 → 06/80	**FCP11**	ATE				
GTB	188	09/75 → 06/80				**FCP2**	ATE	
GTS	188	09/77 → 06/80	**FCP11**	ATE				
GTS	188	09/77 → 06/80				**FCP2**	ATE	
328								
3.2 GTB, GTS 16V	198	01/86 → 12/89	**FCP256**	ATE				
3.2 GTB, GTS 16V	198	01/86 → 12/89				**FCP206**	ATE	
348								
3.4 TB,TS 32V	221	01/90 → 09/94	**FCP451**	ATE				
3.4 TB,TS 32V	221	01/90 → 09/94				**FCP451**	ATE	
360 (F131)								
3.6 Challenge	305	05/01 → 03/05	**FCP1348**	BREMBO				
3.6 Challenge	305	05/01 → 03/05				**FCP1348**	BREMBO	
3.6 Challenge Race (pista)	294	03/99 →	**FRP3024**	BREMBO	Race package			
3.6 Challenge Race (pista)	294	03/99 →				**FRP1077**	BREMBO	Race package
3.6 Challenge Road (Stradale)	313	05/03 → 03/05	**FCP1348**	BREMBO				
3.6 Challenge Road (Stradale)	313	05/03 → 03/05				**FCP1348**	BREMBO	
3.6 Modena	294	03/99 → 03/05	**FCP1348**	BREMBO				
3.6 Modena	294	03/99 → 03/05				**FCP1348**	BREMBO	
365								
4.4 GTC, GTS	259	01/68 → 12/77	**FCP11**	ATE				
456 GT/GTA								
5.5 (F116)	325	01/93 → 06/04	**FCP451**	ATE				
5.5 (F116)	325	01/93 → 06/04				**FCP451**	ATE	
458								
GTE		01/14 → 12/16	**FRP3153**	BREMBO				
GTE		01/14 → 12/16				**FRP3156**	BREMBO	
488								
GT3		01/18 →	**FRP3128**	BREMBO	Sprint Race brake system			
GT3		01/18 →	**FRP3153**	BREMBO	Endurance Race brake system			
GT3		01/18 →				**FRP1078**	BREMBO	
512								
4.9 Boxer B512 i 24V	250	05/86 → 12/87				**FCP451**	ATE	
5.0 24V	250	04/78 → 08/84				**FCP451**	ATE	
5.0 Boxer B512i 24V	250	04/78 → 04/86				**FCP451**	ATE	
550 Barchetta								
5.5	357	10/00 → 04/02	**FCP541**	ATE				
5.5	357	10/00 → 01/05	**FCP1298**	BREMBO				
5.5	357	10/00 → 01/05				**FCP1298**	BREMBO	
550 Maranello								
550	357	09/96 →	**FCP1298**	BREMBO				
550	357	09/96 →				**FCP1298**	BREMBO	
550	357	10/00 → 04/02	**FCP541**	ATE				
550	325	09/98 → 12/02	**FCP1298**	BREMBO				
550	325	09/98 → 12/02				**FCP1298**	BREMBO	

For material availability see page 16-18 / Per la disponibilità materiali vedere a pagina 16-18

FERODO RACING
Updated on November 2020

	kW				NOTE			NOTE
...FERRARI								
Dino								
246 GTB/GTS		01/68 → 12/75	**FCP11**	ATE				
2.4 Spider, Coupe 18V	152	01/67 → 12/70	**FCP9**	LUCAS/TRW				
F355								
3.5 Berlinetta, GTS, Spider 40V	280	09/94 → 12/96	**FCP451**	ATE				
3.5 Berlinetta, GTS, Spider 40V	280	09/94 → 12/96				**FCP451**	ATE	
3.5 Berlinetta, GTS, Spider 40V	280	01/96 →	**FCP451**	ATE				
3.5 Berlinetta, GTS, Spider 40V	280	01/96 →				**FCP451**	ATE	
3.5 Challenge	280	01/96 →	**FRP1078**	BREMBO				
3.5 Challenge	280	01/96 →				**FRP1078**	BREMBO	
F430								
4.3	357	03/08 → 12/09	**FCP1348**	BREMBO	Cast Iron discs			
4.3	357	03/08 → 12/09				**FCP1348**	BREMBO	Cast Iron discs
4.3	360	03/05 → 12/09	**FCP1348**	BREMBO	Cast Iron discs			
4.3	360	03/05 → 12/09				**FCP1348**	BREMBO	Cast Iron discs
4.3	372	09/07 → 12/09	**FCP1348**	BREMBO	Cast Iron discs			
4.3	372	09/07 → 12/09				**FCP1348**	BREMBO	Cast Iron discs
F512M								
4.9 i 48V	324	06/94 → 12/95				**FCP451**	ATE	
GTB								
2.0 i (Turbo) 16V	187	08/85 → 12/89	**FCP256**	ATE				
2.0 i (Turbo) 16V	187	08/85 → 12/89				**FCP206**	ATE	
GTS								
2.0 i (Turbo) 16V	187	08/85 → 12/89	**FCP256**	ATE				
2.0 i (Turbo) 16V	187	08/85 → 12/89				**FCP206**	ATE	
Maranello								
575M	380	04/02 → 12/06	**FCP1298**	BREMBO				
575M	380	04/02 → 12/06				**FCP1298**	BREMBO	
Mondial								
2.9 i 16V	158	06/82 → 09/87	**FCP256**	ATE				
2.9 i 16V	158	06/82 → 09/87				**FCP206**	ATE	
3.2		01/80 → 09/85	**FCP256**	ATE				
3.2		01/80 → 09/85				**FCP206**	ATE	
3.2 i 16V		10/85 → 11/89	**FCP256**	ATE				
3.2 i 16V		10/85 → 11/89				**FCP206**	ATE	
3.4 i 32V		10/89 → 12/93	**FCP256**	ATE				
3.4 i 32V		10/89 → 12/93				**FCP206**	ATE	
FIAT								
124								
1.6	74	01/66 → 12/77	**FCP29**	BENDIX				
1.6	81	01/66 → 12/77	**FCP29**	BENDIX				
1.6 Spider	77, 99	01/82 → 12/86	**FCP370**	LUCAS/TRW				
1.8	87, 94	01/66 → 12/79	**FCP29**	BENDIX				
1.8 Spider	77, 99	01/82 → 12/86	**FCP370**	LUCAS/TRW				
2.0		01/66 → 12/82	**FCP29**	BENDIX				
2.0 Spider	77, 99	01/82 → 12/86	**FCP370**	LUCAS/TRW				
Spider Rally	221	01/17 →	**FRP3140**	BREMBO				
Spider Rally	221	01/17 →				**FRP3140**	BREMBO	
124 (124_)								
1200	48	01/66 → 12/77	**FCP29**	BENDIX				
1200	48	02/73 → 07/75				**FCP22**	BENDIX	
1200 (TA)	44	07/66 → 10/73				**FCP22**	BENDIX	
1400	51	01/66 → 12/77	**FCP29**	BENDIX				
1400	51	12/68 → 12/72				**FCP22**	BENDIX	
1500	55	01/73 → 07/75				**FCP22**	BENDIX	
1500	59	01/71 → 07/75				**FCP22**	BENDIX	
1600	70	01/66 → 12/77	**FCP29**	BENDIX				
1600	70	01/73 → 07/75				**FCP22**	BENDIX	

For material availability see page 16-18 / Per la disponibilità materiali vedere a pagina 16-18

...FIAT	kW				NOTE			NOTE
124 Coupe (124_)								
1400 Sport	66	06/67 → 10/72				FCP22	BENDIX	
1600 (BC 1)	74	11/71 → 10/73				FCP22	BENDIX	
1600 (BC 1)	81	04/70 → 10/73				FCP22	BENDIX	
1600 Sport	76	08/72 → 12/75				FCP22	BENDIX	
1600 Sport	80	08/72 → 12/75				FCP22	BENDIX	
1800 Sport	82	01/73 → 02/76				FCP22	BENDIX	
1800 Sport (CC1)	87	01/73 → 02/76				FCP22	BENDIX	
124 Familiare (124_)								
1.4	51	09/67 → 05/71				FCP22	BENDIX	
1200	44	04/67 → 05/73				FCP22	BENDIX	
1200	48	05/73 → 03/75				FCP22	BENDIX	
124 Spider								
1.4 Multiair	103	09/16 →	FCP4821	BREMBO				
124 Spider (124_)								
1500 Sport (BS)	66	01/66 → 12/72				FCP22	BENDIX	
1600 Sport (BS)	82	11/69 → 08/73				FCP22	BENDIX	
1600 Sport (BS1)	74	11/69 → 08/73				FCP22	BENDIX	
1600 Sport (BS1)	80	01/69 → 12/74				FCP22	BENDIX	
1600 Sport (CS)	76	01/69 → 12/74				FCP22	BENDIX	
1800 Rally Abarth (CSA)	94	09/72 → 07/75				FCP22	BENDIX	
1800 Sport (CS1)	82	01/73 → 07/75				FCP22	BENDIX	
1800 Sport (CS1)	87	01/72 → 12/77				FCP22	BENDIX	
125 (125_)								
1.6 (TA)	66	07/67 → 03/74				FCP22	BENDIX	
1.6 (TA)	74	01/67 → 12/75	FCP29	BENDIX				
1.6 (TA)	74	05/69 → 10/73				FCP22	BENDIX	
127								
0.9	33	01/71 → 12/83	FCP29	BENDIX				
1.0	37	01/71 → 12/83	FCP29	BENDIX				
1.3		01/71 → 12/83	FCP29	BENDIX				
1.3 D	33	01/83 → 12/86	FCP29	BENDIX				
128								
1.1	40	01/68 → 12/81	FCP29	BENDIX				
1.3	54	01/68 → 12/81	FCP29	BENDIX				
131								
1.3	40, 57	01/74 → 02/84	FCP29	BENDIX				
1.4	51	09/81 → 12/84	FCP29	BENDIX				
1.6	55	10/77 → 08/82	FCP29	BENDIX				
1.6	55	09/82 → 12/84	FCP351	BENDIX				
1.6	63	10/77 → 08/82	FCP29	BENDIX				
1.6	63	09/82 → 12/84	FCP351	BENDIX				
1.6	72	10/77 → 08/82	FCP29	BENDIX				
1.6	72	09/82 → 12/84	FCP351	BENDIX				
2.4		06/79 → 10/84	FCP29	BENDIX				
2.5 D	53	03/79 → 09/82	FCP29	BENDIX				
2.5 D	53	09/82 → 03/87	FCP351	BENDIX				
131 (131_)								
2.0 Racing	85	06/78 → 12/81				FCP22	BENDIX	
2.0 Super	83	10/77 → 08/85	FCP29	BENDIX				
2.0 Super	83	01/81 → 12/84				FCP22	BENDIX	
131 Familiare/Panorama (131_)								
2.0 Super	83	01/81 → 12/84				FCP22	BENDIX	
131 Mirafiori								
1.3 131 Mirafiori	49	06/74 → 12/81	FCP29	BENDIX				
1.4 131 Mirafiori	52	01/82 → 12/83	FCP29	BENDIX				
1.4 131 Mirafiori	54	01/83 → 09/85	FCP351	BENDIX				
1.6 131 Mirafiori	73	06/74 → 12/81	FCP29	BENDIX				
1.6 131 Mirafiori	73	01/83 → 09/85	FCP351	BENDIX				
2.0 131 Mirafiori	44, 84	06/74 → 12/82	FCP29	BENDIX				
2.0 131 Mirafiori	44, 84	01/83 → 09/85	FCP351	BENDIX				
2.4 131 Mirafiori	54	01/82 → 12/83	FCP29	BENDIX				
2.4 131 Mirafiori	54	01/83 → 09/85	FCP351	BENDIX				
2.4 131 Mirafiori	66	06/74 → 12/81	FCP29	BENDIX				
2.5 131 Mirafiori	53	06/78 → 09/82	FCP29	BENDIX				
2.5 131 Mirafiori	53	09/82 → 12/86	FCP351	BENDIX				

For material availability see page 16-18 / Per la disponibilità materiali vedere a pagina 16-18

FERODO RACING
Updated on November 2020

...FIAT	kW				NOTE			NOTE
132								
2.0	88	01/68 → 12/77	**FCP29**	BENDIX				
2.4	66	01/77 → 12/81	**FCP29**	BENDIX				
132 (132_)								
1.6	65	05/77 → 09/82				**FCP22**	BENDIX	
1.6	66	03/77 → 12/81				**FCP22**	BENDIX	
1.6	72	01/68 → 08/81	**FCP29**	BENDIX				
1.6	72	01/76 → 12/82				**FCP22**	BENDIX	
1.6	72	09/81 → 09/82	**FCP370**	LUCAS/TRW				
1.6	72	04/72 → 01/76				**FCP22**	BENDIX	
1.7 GLS (A1)	79	04/74 → 12/75				**FCP22**	BENDIX	
1.7 GLS (A1)	82	11/75 → 05/77	**FCP29**	BENDIX				
1.7 GLS (A1)	82	11/75 → 01/77				**FCP22**	BENDIX	
1.7 GLS (A1)	82	06/77 → 01/79	**FCP29**	BENDIX				
1.7 Special (A1)	77	04/72 → 01/74				**FCP22**	BENDIX	
1.8	81	01/68 → 12/77	**FCP29**	BENDIX				
1.8	81	01/77 → 12/81	**FCP29**	BENDIX				
2.0	83	01/76 → 06/81				**FCP22**	BENDIX	
2.0	83	01/77 → 12/81	**FCP29**	BENDIX				
1500								
1.5	55	01/62 → 12/69	**FCP9**	LUCAS/TRW				
1600								
1.6		01/62 → 12/65	**FCP9**	LUCAS/TRW				
1800								
1.8		07/62 → 12/69	**FCP9**	LUCAS/TRW				
2300								
2.3		01/62 → 12/68	**FCP9**	LUCAS/TRW				
500								
1.4 16V	74	01/07 →	**FCP1466**	BOSCH				
1.4 16V	74	01/07 →				**FCP1324**	LUCAS/TRW	
500L								
0.9 8V	77	09/12 →	**FCP1467**	BOSCH				
0.9 8V	77	09/12 →				**FCP1349**	LUCAS/TRW	
1.3 D Multijet	62	09/12 →	**FCP1467**	BOSCH				
1.3 D Multijet	62	09/12 →				**FCP1349**	LUCAS/TRW	
1.4 16V	70	09/12 →	**FCP1467**	BOSCH				
1.4 16V	70	09/12 →				**FCP1349**	LUCAS/TRW	
850								
0.8	25	07/64 → 10/72	**FCP22**	BENDIX				
0.8	27	07/64 → 10/72	**FCP22**	BENDIX				
0.8 Special (GB)	35	03/68 → 10/72	**FCP22**	BENDIX				
850 Coupe (100_)								
0.9 Sport	38	02/68 → 10/72	**FCP22**	BENDIX				
850 Spider								
0.8	36	10/65 → 10/68	**FCP22**	BENDIX				
0.9 Sport	38	01/68 → 12/72	**FCP29**	BENDIX				
0.9 Sport	38	03/68 → 12/72	**FCP22**	BENDIX				
900								
0.9 E	33	01/82 →	**FCP351**	BENDIX				
0.9 T,E	33	01/79 → 12/81	**FCP29**	BENDIX				
Argenta								
1.6	72	01/81 → 04/83	**FCP370**	LUCAS/TRW				
1.6	72	01/81 → 04/83				**FCP360**	BENDIX	
1.6	72	05/83 → 12/86	**FCP370**	LUCAS/TRW				
1.6	72	05/83 → 12/86				**FCP360**	BENDIX	
2.0	83	06/78 → 04/83	**FCP29**	BENDIX				
2.0	83	06/78 → 04/83	**FCP370**	LUCAS/TRW				
2.0	83	06/78 → 04/83				**FCP360**	BENDIX	
2.0	83	05/83 → 12/85	**FCP29**	BENDIX				
2.0	83	05/83 → 12/85	**FCP370**	LUCAS/TRW				
2.0	83	05/83 → 12/85				**FCP360**	BENDIX	
2.4	53	01/81 → 04/83	**FCP370**	LUCAS/TRW				
2.4	53	01/81 → 04/83				**FCP360**	BENDIX	
2.4	53	05/83 → 12/86	**FCP370**	LUCAS/TRW				

For material availability see page 16-18 / Per la disponibilità materiali vedere a pagina 16-18

...FIAT	kW				NOTE			NOTE
...Argenta								
2.4	53	05/83 → 12/86				FCP360	BENDIX	
2.4 TD Volumex	66	01/83 → 12/86	FCP370	LUCAS/TRW				
2.4 TD Volumex	66	01/83 → 12/86				FCP360	BENDIX	
Barchetta (183)								
1.8 16V	96	04/95 → 05/05	FCP351	BENDIX				
1.8 16V	96	04/95 → 05/05				FCP409	LUCAS/TRW	
1.8 16V	96	05/95 → 05/05	FCP370	LUCAS/TRW				
1.8 16V	96	06/95 → 05/05	FCP1056	ATE				
Brava								
1.6 100 16V	76	09/98 → 12/01	FCP1056	ATE	Automatic			
1.8 115 16V	83	09/98 → 12/01	FCP1056	ATE				
1.8 16V	83	09/95 → 08/98	FCP1056	ATE				
1.9 JTD 100,105	74	09/98 → 12/01	FCP1056	ATE				
1.9 TD 100	74	09/95 → 08/96	FCP1056	ATE				
1.9 TD 100	74	09/96 → 08/98	FCP1056	ATE				
Bravo								
1.6 100 16V	76	09/98 → 12/01	FCP1056	ATE	Automatic			
1.8 115 16V	83	09/98 → 12/01	FCP1056	ATE				
1.8 16V	83	09/95 → 08/96	FCP1056	ATE				
1.8 16V	83	09/96 → 08/98	FCP1056	ATE				
1.9 JTD 100,105	74	09/98 → 12/01	FCP1056	ATE				
1.9 TD 100	74	09/95 → 08/98	FCP1056	ATE				
1.9 TD 100	74	09/98 → 12/00	FCP1056	ATE				
2.0 HGT 155 20V	113	09/98 → 12/01	FCP1052	ATE				
2.0 HGT 20V	108	09/95 → 04/97	FCP1052	ATE				
2.0 HGT 20V	108	09/95 → 04/97				FCP409	LUCAS/TRW	
2.0 HGT 20V	108	04/97 → 08/98	FCP1052	ATE				
2.0 HGT 20V	108	04/97 → 08/98				FCP409	LUCAS/TRW	
2.0 HGT 20V	108	04/97 → 08/98				FCP1113	LUCAS/TRW	
Bravo II (198)								
1.4 T-Jet	110	09/07 →	FCP1468	BOSCH				
1.4 T-Jet	110	09/07 →				FCP1469	BOSCH	
Cinquecento								
0.7	22	03/92 → 09/94	FCP925	BENDIX				
0.9	29	03/92 → 02/98	FCP925	BENDIX				
1.1	40	03/92 → 02/98	FCP925	BENDIX				
Cityvan								
1.1	42	01/89 →	FCP519	ATE				
1.7	44	01/89 →	FCP519	ATE				
Coupe (FA/175)								
1.8 16V	96	03/96 → 08/00	FCP565	LUCAS/TRW				
1.8 16V	96	03/96 → 08/00	FCP1052	ATE				
1.8 16V	96	03/96 → 08/00				FCP409	LUCAS/TRW	
2.0 16V	102	11/93 → 08/99	FCP565	LUCAS/TRW				
2.0 16V	102	11/93 → 08/99	FCP1052	ATE				
2.0 16V	102	11/93 → 08/99				FCP409	LUCAS/TRW	
2.0 16V Turbo	140	11/93 → 08/96	FCP565	LUCAS/TRW				
2.0 16V Turbo	140	11/93 → 08/96	FCP1052	ATE				
2.0 16V Turbo	140	11/93 → 08/96	FCP1298	BREMBO	Sport package upgrade 310 or 316x28mm discs			
2.0 16V Turbo	140	11/93 → 08/96				FCP409	LUCAS/TRW	Option
2.0 16V Turbo	140	11/93 → 08/96				FCP596	LUCAS/TRW	
2.0 20V	108	08/96 → 04/98	FCP1052	ATE				
2.0 20V	108	08/96 → 04/98				FCP409	LUCAS/TRW	
2.0 20V Turbo	162	08/96 → 12/00	FCP721	BREMBO	305x28mm discs			
2.0 20V Turbo	162	08/96 → 12/00	FCP1052	ATE				
2.0 20V Turbo	162	08/96 → 12/00	FCP1298	BREMBO	Sport package upgrade 310 or 316x28mm discs			
2.0 20V Turbo	162	08/96 → 12/00				FCP409	LUCAS/TRW	
Croma								
1.6	62	10/85 → 09/88				FCP360	BENDIX	
1.9 D	66	10/85 → 09/88				FCP360	BENDIX	
1.9 D	66	10/85 → 09/88				FCP596	LUCAS/TRW	
1.9 TD		10/85 → 09/88				FCP360	BENDIX	
1.9 TD		10/85 → 09/88				FCP596	LUCAS/TRW	
2.0 (Turbo)	114	10/85 → 09/88				FCP360	BENDIX	
2.0 (Turbo)	114	10/85 → 09/88				FCP596	LUCAS/TRW	
2.0 16V	103	01/93 → 03/95	FCP565	LUCAS/TRW				
2.0 16V	103	01/93 → 03/95				FCP596	LUCAS/TRW	
2.0 CHT/i.e.	66, 88	10/85 → 09/88				FCP360	BENDIX	

For material availability see page 16-18 / Per la disponibilità materiali vedere a pagina 16-18



kW

...FIAT

					NOTE			NOTE
...Croma								
2.0 CHT/i.e.	66, 88	10/85 → 09/88				**FCP596**	LUCAS/TRW	
2.5 D	85	10/85 → 09/88				**FCP360**	BENDIX	
2.5 D, TD	85	10/85 → 09/88				**FCP596**	LUCAS/TRW	
2.5 TD	117	10/85 → 09/88				**FCP360**	BENDIX	
2.5 TD	117	10/85 → 09/88				**FCP596**	LUCAS/TRW	
2.5 V6 (Turbo)	118	01/93 → 12/96	**FCP565**	LUCAS/TRW				
2.5 V6 (Turbo)	118	01/93 → 12/96				**FCP596**	LUCAS/TRW	
Croma (194)								
1.8	103	11/05 →	**FCP1520**	ATE				
1.9	100	10/05 → 10/07	**FCP1520**	ATE	from Chassis:2060169			
1.9	85	06/05 →	**FCP1520**	ATE				
1.9	88	06/05 →	**FCP1520**	ATE				
1.9	88	04/06 →	**FCP1520**	ATE				
2.2	108	06/05 →	**FCP1520**	ATE				
Doblo								
1.2	48	09/00 →	**FCP1376**	ATE				
1.6 i	76	10/01 →	**FCP1376**	ATE				
1.9 D	46	09/00 →	**FCP1376**	ATE				
1.9 JTD	74	07/01 →	**FCP1376**	ATE				
Doblo Cargo (223)								
1.6 i	76	10/01 →	**FCP1376**	ATE				
Duna								
1.1	43	01/87 → 12/91	**FCP519**	ATE				
1.3	52	01/87 → 12/91	**FCP519**	ATE				
1.7 D	42	01/87 → 12/89	**FCP519**	ATE				
1.9		01/87 →	**FCP519**	ATE				
Fiorino								
1.0	40	01/78 → 12/81	**FCP29**	BENDIX				
1.0	41	12/87 → 08/88	**FCP29**	BENDIX				
1.0	41	09/88 → 08/93	**FCP519**	ATE				
1.1	42	01/88 → 12/92	**FCP519**	ATE				
1.3	48	01/88 → 12/92	**FCP519**	ATE				
1.3 D	38	01/78 → 12/81	**FCP29**	BENDIX				
1.4	49	01/88 → 12/92	**FCP519**	ATE				
1.5	50	01/88 → 12/92	**FCP519**	ATE				
1.6	55	01/88 → 12/92	**FCP519**	ATE				
1.7 D	42	01/88 → 12/92	**FCP519**	ATE				
Grande Punto								
1.2	48	09/05 →	**FCP1466**	BOSCH				
1.3 Multijet	55	09/05 →	**FCP1466**	BOSCH				
1.3 Multijet	66	09/05 →	**FCP1467**	BOSCH				
1.9 Multijet	88	09/05 →	**FCP1467**	BOSCH				
1.9 Multijet	88	09/05 →				**FCP1858**	BOSCH	
1.9 Multijet	96	09/05 →	**FCP1467**	BOSCH				
1.9 Multijet	96	09/05 →				**FCP1858**	BOSCH	
Grande Punto (199_)								
1.4 T-Jet	88	09/07 →	**FCP1467**	BOSCH				
1.4 T-Jet	88	09/07 →				**FCP1858**	BOSCH	
Idea								
1.9 i Multijet 16V	74	01/04 →	**FCP1467**	BOSCH				
Marea								
1.8 115 Berlina 16V	83	01/96 →	**FCP1056**	ATE				
1.8 i 115 Berlina 16V	83	02/97 →	**FCP1056**	ATE				
1.9 JTD 105-110	74	01/99 →	**FCP1056**	ATE				
1.9 TD 100	74	02/97 → 12/99	**FCP1056**	ATE				
1.9 TD 100	74	01/96 → 12/99	**FCP1056**	ATE				
2.0 150 20V	108	01/96 →	**FCP1052**	ATE				
2.0 150 20V	108	01/96 →				**FCP409**	LUCAS/TRW	
2.0 150 20V	108	01/96 →				**FCP1113**	LUCAS/TRW	
2.0 i 150 20V	108	09/96 → 04/99	**FCP1052**	ATE				
2.0 i 150 20V	108	09/96 → 04/99				**FCP1113**	LUCAS/TRW	
2.4 JTD 130	100	01/99 → 12/00	**FCP1052**	ATE				
2.4 JTD 130	100	01/99 → 12/00				**FCP1113**	LUCAS/TRW	
2.4 TD 125	91	01/96 → 04/97	**FCP1052**	ATE				
2.4 TD 125	91	01/96 → 04/97				**FCP409**	LUCAS/TRW	
2.4 TD 125	91	04/97 → 12/99	**FCP1052**	ATE				

For material availability see page 16-18 / Per la disponibilità materiali vedere a pagina 16-18

...FIAT	kW				NOTE			NOTE
...Marea								
2.4 TD 125	91	04/97 → 12/99				FCP409	LUCAS/TRW	
2.4 TD 125	91	04/97 → 12/99				FCP1113	LUCAS/TRW	
Marea Weekend								
1.6 100 16V	76	01/96 →	FCP1056	ATE				
1.6 i 100 16V	76	09/96 →	FCP1056	ATE				
1.8 115 16V	83	01/96 →	FCP1056	ATE				
1.8 i 115 16V	83	09/96 →	FCP1056	ATE				
1.9 JTD 105/110	74	04/99 →	FCP1056	ATE				
1.9 TD 100	74	02/97 → 12/99	FCP1056	ATE				
1.9 TD 100	74	01/96 → 12/99	FCP1056	ATE				
2.0 150 20V	108, 113	01/96 →	FCP1052	ATE				
2.0 150 20V	108, 113	01/96 →				FCP409	LUCAS/TRW	
Marengo								
1.9 D		01/97 →	FCP1056	ATE				
Multipla								
1.6 16V	70	04/02 → 06/10	FCP1052	ATE				
1.6 16V	70	04/02 → 06/10				FCP1469	BOSCH	
1.6 16V Bipower	76	10/01 → 06/10	FCP1052	ATE				
1.6 16V Bipower	76	10/01 → 06/10				FCP1469	BOSCH	
1.6 i Bipower 16V	76	04/99 →	FCP1052	ATE				
1.6 i Bipower 16V	76	04/99 →				FCP1469	BOSCH	
1.6 i 16V	71, 76	08/98 →	FCP1052	ATE				
1.6 i 16V	71, 76	08/98 →				FCP1469	BOSCH	
1.9 JTD	76	08/98 →	FCP1052	ATE				
1.9 JTD	76	08/98 →				FCP1469	BOSCH	
1.9 JTD	81	07/02 →	FCP1052	ATE				
1.9 JTD	81	07/02 →				FCP1469	BOSCH	
Palio								
1.2	55	04/96 →	FCP519	ATE				
1.4	52	07/97 →	FCP519	ATE				
1.6	74	04/96 →	FCP519	ATE				
1.7 TD	51	04/96 →	FCP519	ATE				
Palio Weekend								
1.2 i	55	07/97 →	FCP519	ATE				
1.6 i 16V	74	07/97 →	FCP519	ATE				
1.7 TD	51	07/97 →	FCP519	ATE				
Panda (141_)								
1000	32	10/82 → 12/95	FCP351	BENDIX				
1000	37	01/85 → 12/92	FCP351	BENDIX				
1000 4x4	32	01/86 → 07/89	FCP351	BENDIX				
1000 4x4	33	05/86 → 12/94	FCP351	BENDIX				
1000 4x4	37	01/86 → 12/92	FCP351	BENDIX				
1000 i	33	01/91 → 02/93	FCP351	BENDIX				
1000 i	33	03/93 → 10/95	FCP351	BENDIX				
1000 i.e. Cat	33	10/87 → 08/98	FCP351	BENDIX				
1100	32	10/82 → 03/93	FCP351	BENDIX				
1100	33	10/82 → 03/93	FCP351	BENDIX				
1100	33	04/93 →	FCP351	BENDIX				
1100	35	10/82 → 03/93	FCP351	BENDIX				
1100	37	10/82 → 03/93	FCP351	BENDIX				
1100	37	01/91 → 08/99	FCP370	LUCAS/TRW				
1100 i	32	01/85 → 12/93	FCP351	BENDIX				
1100 i	33	04/93 → 08/03	FCP351	BENDIX				
1100 i	37	01/91 → 02/93	FCP370	LUCAS/TRW				
1100 i	37	03/93 → 08/99	FCP370	LUCAS/TRW				
1300		01/80 → 04/86	FCP351	BENDIX				
1300 D	27	05/86 → 04/91	FCP351	BENDIX				
1300 i		01/80 → 04/86	FCP351	BENDIX				
700	18	01/80 → 09/82	FCP29	BENDIX				
700	18	10/82 → 06/84	FCP351	BENDIX				
700	18	07/84 → 12/94	FCP351	BENDIX				
700 i	18	01/80 → 09/82	FCP29	BENDIX				
800	25	10/82 → 12/94	FCP351	BENDIX				
800	26	01/80 → 09/82	FCP29	BENDIX				
800 i	26	01/80 → 09/82	FCP29	BENDIX				
900	29	10/82 → 12/95	FCP351	BENDIX				
900	33	01/80 → 09/82	FCP29	BENDIX				
900 i	33	01/80 → 09/82	FCP29	BENDIX				
900 i	29	03/93 → 12/96	FCP351	BENDIX				

For material availability see page 16-18 / Per la disponibilità materiali vedere a pagina 16-18

FERODO RACING
Updated on November 2020

...FIAT

	kW				NOTE			NOTE
PANDA (169)								
1.2 4x4	44	10/04 →				FCP1324	LUCAS/TRW	
1.2 4x4	51	11/09 →				FCP1324	LUCAS/TRW	
PANDA (169_)								
1.4 100HP	74	10/06 →	FCP1466	BOSCH				
1.4 100HP	74	10/06 →				FCP1324	LUCAS/TRW	
Penny								
1.1	42	01/89 →	FCP519	ATE				
1.7	44	01/89 → 12/90	FCP519	ATE				
Punto (176)								
1.1	40	09/97 → 08/99	FCP1056	ATE				
1.1	40	09/97 → 08/99	FCP1160	ATE				
1.1 55		11/93 → 08/97	FCP925	BENDIX				
1.1 55		11/93 → 08/97				FCP409	LUCAS/TRW	ABS
1.1 i 55	40	11/93 → 08/99	FCP925	BENDIX				
1.1 i 55	40	11/93 → 08/99				FCP1113	LUCAS/TRW	
1.2 60, 75		11/93 → 08/97	FCP370	LUCAS/TRW				
1.2 60, 75		11/93 → 08/97	FCP925	BENDIX				
1.2 60, 75		11/93 → 08/97				FCP409	LUCAS/TRW	ABS
1.2 60, 75, 16V	43, 44	09/97 → 08/99	FCP1056	ATE				
1.2 60, 75, 16V	43, 44	09/97 → 08/99	FCP1160	ATE				
1.2 60, 75, 16V	43, 44	09/97 → 08/99				FCP409	LUCAS/TRW	ABS
1.2 i 60, 75	44	11/93 → 08/99	FCP370	LUCAS/TRW				
1.2 i 60, 75	44	11/93 → 08/99	FCP925	BENDIX				
1.2 i 60, 75	44	11/93 → 08/99				FCP1113	LUCAS/TRW	
1.2 i 85 16V	54	09/97 → 08/99	FCP1160	ATE				
1.2 i 85 16V	54	09/97 → 08/99				FCP1113	LUCAS/TRW	
1.4 GT		11/93 → 08/97	FCP370	LUCAS/TRW				
1.4 GT		11/93 → 08/97				FCP409	LUCAS/TRW	
1.4 GT	97	09/97 → 08/99	FCP1056	ATE				
1.4 GT	97	09/97 → 08/99	FCP1160	ATE				
1.4 GT	97	09/97 → 08/99				FCP409	LUCAS/TRW	
1.4 i GT	96	09/97 → 08/99	FCP1056	ATE				
1.4 i GT	96	09/97 → 08/99				FCP1113	LUCAS/TRW	
1.4 i GT	98	11/93 → 08/97	FCP370	LUCAS/TRW				
1.4 i GT	98	11/93 → 08/97				FCP1113	LUCAS/TRW	
1.6 90		11/93 → 08/97	FCP370	LUCAS/TRW				
1.6 90		11/93 → 08/97				FCP409	LUCAS/TRW	ABS
1.6 90	66	09/97 → 08/99	FCP1056	ATE				
1.6 90	66	09/97 → 08/99	FCP1160	ATE				
1.6 90	66	09/97 → 08/99				FCP409	LUCAS/TRW	ABS
1.6 i 90		09/97 → 08/99	FCP1160	ATE				
1.6 i 90		09/97 → 08/99				FCP1113	LUCAS/TRW	
1.6 i 90	65	11/93 → 08/97	FCP370	LUCAS/TRW				
1.7 D	42	12/94 → 11/96	FCP925	BENDIX				
1.7 D	46	09/97 → 08/99	FCP1056	ATE				
1.7 D	46	09/97 → 08/99	FCP1160	ATE				
1.7 TD	51, 52	11/93 → 08/97	FCP370	LUCAS/TRW				
1.7 TD	51, 52	11/93 → 08/97				FCP409	LUCAS/TRW	ABS
1.7 TD	51, 52	11/93 → 08/97				FCP1113	LUCAS/TRW	
1.7 TD	51, 52	09/97 → 08/99	FCP1056	ATE				
1.7 TD	51, 52	09/97 → 08/99	FCP1160	ATE				
1.7 TD	51, 52	09/97 → 08/99				FCP409	LUCAS/TRW	ABS
1.7 TD	51, 52	09/97 → 08/99				FCP1113	LUCAS/TRW	
PUNTO (188)								
1.2	44	08/99 →	FCP925	BENDIX				
1.2 16V	59	08/99 →	FCP1160	ATE				
1.2 i	44	08/99 → 05/03	FCP925	BENDIX				
1.2 i	44	06/03 →	FCP925	BENDIX				
1.2 i 16V	59	08/99 → 05/03	FCP1160	ATE				
1.2 i 16V	59	06/03 →	FCP1160	ATE				
1.8 i HGT 16V	96	06/03 →	FCP1052	ATE				
1.8 i HGT 130 16V	96	08/99 → 05/03	FCP1376	ATE				
1.8 i HGT 130 16V	96	08/99 → 05/03				FCP1324	LUCAS/TRW	
1.9 JTD	80	08/99 →	FCP1056	ATE				
1.9 JTD	74	06/03 →	FCP1052	ATE				
Regata								
1.3 70, 75	49	11/83 → 09/90	FCP351	BENDIX				
1.5 85	60	11/83 → 04/90	FCP351	BENDIX				
1.5 85	60	11/83 → 04/90	FCP370	LUCAS/TRW				
1.6 85, 100	60, 74	11/83 → 09/90	FCP370	LUCAS/TRW				
1.7 D	43, 44	11/83 → 04/90	FCP370	LUCAS/TRW				

For material availability see page 16-18 / Per la disponibilità materiali vedere a pagina 16-18

...FIAT	kW				NOTE			NOTE
...Regata								
1.9 D	48	11/83 → 09/90	**FCP370**	LUCAS/TRW				
1.9 TD	59	11/83 → 09/90	**FCP370**	LUCAS/TRW				
2.0 TD	59	05/86 → 07/89	**FCP370**	LUCAS/TRW				
Ritmo								
1.0 60	44	09/78 → 09/82	**FCP29**	BENDIX				
1.1 60	42, 44	09/82 → 12/88	**FCP351**	BENDIX				
1.1 60	44	09/78 → 08/82	**FCP29**	BENDIX				
1.3 65, 70	48, 50	09/78 → 08/82	**FCP29**	BENDIX				
1.3 65, 70	48, 50	09/82 → 12/88	**FCP351**	BENDIX				
1.5 75, 85		09/78 → 12/79	**FCP29**	BENDIX				
1.5 75, 85	55, 63	01/80 → 08/82	**FCP29**	BENDIX				
1.5 75, 85	55, 63	09/82 → 12/88	**FCP351**	BENDIX				
1.6 90, 105	77	09/78 → 02/83	**FCP29**	BENDIX				
1.6 90, 105	77	09/78 → 02/83	**FCP351**	BENDIX				
1.6 90, 105	77	03/83 → 06/88	**FCP351**	BENDIX				
1.6 90, 105	77	03/83 → 06/88	**FCP370**	LUCAS/TRW				
1.7 D	41	01/81 → 08/82	**FCP29**	BENDIX				
1.7 D	41	09/82 → 02/83	**FCP351**	BENDIX				
1.7 D	41	03/83 → 06/88	**FCP351**	BENDIX				
1.7 TD	44	01/81 → 08/82	**FCP29**	BENDIX				
1.7 TD	44	09/82 → 02/83	**FCP351**	BENDIX				
1.7 TD	44	03/83 → 06/88	**FCP351**	BENDIX				
1.9 D	41	01/84 → 06/88	**FCP370**	LUCAS/TRW				
1.9 TD	44	01/84 → 06/88	**FCP370**	LUCAS/TRW				
2.0 125, 130	81, 96	09/78 → 02/83	**FCP72**	BENDIX				
2.0 125, 130	81, 96	09/78 → 02/83	**FCP370**	LUCAS/TRW				
2.0 125, 130	81, 96	03/83 → 06/88	**FCP72**	BENDIX				
2.0 125, 130	81, 96	03/83 → 06/88	**FCP370**	LUCAS/TRW				
Scudo								
1.9 JTD	81	01/00 →	**FCP565**	LUCAS/TRW				
1.9 JTD	81	01/00 →				**FCP850**	ATE	
Seicento								
0.9	29	03/98 →	**FCP925**	BENDIX				
1.1	40	03/98 →	**FCP925**	BENDIX				
Siena								
1.2	55	04/96 →	**FCP519**	ATE				
1.4	52	07/97 →	**FCP519**	ATE				
1.6 16V	74	04/96 →	**FCP519**	ATE				
STILO (192)								
1.2 i 16V	59	09/01 →	**FCP1466**	BOSCH				
1.2 i 16V	59	09/01 →				**FCP1469**	BOSCH	
1.6 i 16V	76	09/01 →	**FCP1466**	BOSCH				
1.6 i 16V	76	09/01 →				**FCP1469**	BOSCH	
1.8 16V	98	09/01 →	**FCP1467**	BOSCH				
1.8 16V	98	09/01 →				**FCP1469**	BOSCH	
1.9 JTD	103	01/04 → 11/06	**FCP1467**	BOSCH				
1.9 JTD	103	01/04 → 11/06				**FCP1469**	BOSCH	
1.9 JTD 115	85	09/01 →	**FCP1467**	BOSCH				
1.9 JTD 115	85	09/01 →				**FCP1469**	BOSCH	
1.9 JTD 80	59	09/01 →	**FCP1467**	BOSCH				
1.9 JTD 80	59	09/01 →				**FCP1469**	BOSCH	
2.4 20V	125	09/01 →	**FCP1468**	BOSCH				
2.4 20V	125	09/01 →				**FCP1469**	BOSCH	
STILO Multi Wagon (192)								
1.6 i	76	11/02 →	**FCP1467**	BOSCH				
1.6 i	76	11/02 →				**FCP1469**	BOSCH	
1.8 i	96	11/02 →	**FCP1467**	BOSCH				
1.8 i	96	11/02 →				**FCP1469**	BOSCH	
1.9 JTD	59	01/03 → 08/08	**FCP1467**	BOSCH				
1.9 JTD	59	01/03 → 08/08				**FCP1469**	BOSCH	
1.9 JTD	85	01/03 → 08/08	**FCP1467**	BOSCH				
1.9 JTD	85	01/03 → 08/08				**FCP1469**	BOSCH	
Strada								
1.1 60	40	05/83 → 12/87	**FCP351**	BENDIX				
1.3 65, 70	48, 50	01/78 → 12/81	**FCP29**	BENDIX				
1.3 65, 70	48, 50	01/83 → 01/88	**FCP351**	BENDIX				
1.5 85, Super	63	01/80 → 12/82	**FCP29**	BENDIX				
1.5 85, Super	63	05/83 → 01/88	**FCP370**	LUCAS/TRW				
1.6 105	77	09/81 → 07/85	**FCP370**	LUCAS/TRW				

For material availability see page 16-18 / Per la disponibilità materiali vedere a pagina 16-18

FERODO RACING
Updated on November 2020

...FIAT

	kW				NOTE			NOTE
Tempra								
1.4	51	05/90 → 07/96	**FCP370**	LUCAS/TRW	ABS			
1.4	51	05/90 → 07/96	**FCP524**	LUCAS/TRW				
1.4	51	05/90 → 07/96				**FCP409**	LUCAS/TRW	ABS
1.6	55	04/90 → 07/96	**FCP370**	LUCAS/TRW	ABS			
1.6	55	04/90 → 07/96	**FCP524**	LUCAS/TRW				
1.6	55	04/90 → 07/96				**FCP409**	LUCAS/TRW	ABS
1.6	57	04/90 → 07/96	**FCP370**	LUCAS/TRW	ABS			
1.6	57	04/90 → 07/96	**FCP524**	LUCAS/TRW				
1.6	57	04/90 → 07/96				**FCP409**	LUCAS/TRW	ABS
1.6	66	04/90 → 07/96	**FCP370**	LUCAS/TRW	ABS			
1.6	66	04/90 → 07/96	**FCP524**	LUCAS/TRW				
1.6	66	04/90 → 07/96				**FCP409**	LUCAS/TRW	ABS
1.9 D	48	05/90 → 07/96	**FCP370**	LUCAS/TRW	ABS			
1.9 D	48	05/90 → 07/96	**FCP524**	LUCAS/TRW				
1.9 D	48	05/90 → 07/96				**FCP409**	LUCAS/TRW	ABS
1.9 TD	59	02/91 → 07/96	**FCP370**	LUCAS/TRW				
1.9 TD	59	02/91 → 07/96				**FCP409**	LUCAS/TRW	ABS
1.9 TD	66	02/91 → 07/96	**FCP370**	LUCAS/TRW				
1.9 TD	66	02/91 → 07/96				**FCP409**	LUCAS/TRW	ABS
2.0	85	04/90 → 06/93	**FCP370**	LUCAS/TRW				
2.0	85	04/90 → 06/93				**FCP409**	LUCAS/TRW	ABS
2.0 16V	83	01/93 → 07/96	**FCP565**	LUCAS/TRW				
2.0 16V	83	01/93 → 07/96				**FCP409**	LUCAS/TRW	
2.0 S. America only	85	01/92 → 07/96	**FCP519**	ATE				
TEMPRA (159_)								
1.8 i.e. (159.AN)	77	03/92 → 08/96	**FCP370**	LUCAS/TRW				
1.8 i.e. (159.AN)	77	03/92 → 08/96				**FCP409**	LUCAS/TRW	
1.8 i.e. (159.AV)	76	09/93 → 08/96	**FCP370**	LUCAS/TRW				
1.8 i.e. (159.AV)	76	09/93 → 08/96				**FCP409**	LUCAS/TRW	
1.8 i.e. (159.AZ)	66	09/93 → 08/96	**FCP370**	LUCAS/TRW				
1.8 i.e. (159.AZ)	66	09/93 → 08/96				**FCP409**	LUCAS/TRW	
1.8 i.e. (159.BY)	74	10/94 → 08/96	**FCP370**	LUCAS/TRW				
1.8 i.e. (159.BY)	74	10/94 → 08/96				**FCP409**	LUCAS/TRW	
TEMPRA S.W. (159_)								
1.8 i.e. (159.AN)	77	03/92 → 12/93	**FCP370**	LUCAS/TRW				
1.8 i.e. (159.AN)	77	03/92 → 12/93				**FCP409**	LUCAS/TRW	
1.8 i.e. (159.AV)	76	09/93 → 08/96	**FCP370**	LUCAS/TRW				
1.8 i.e. (159.AV)	76	09/93 → 08/96				**FCP409**	LUCAS/TRW	
1.8 i.e. (159.AZ)	66	09/93 → 08/96	**FCP370**	LUCAS/TRW				
1.8 i.e. (159.AZ)	66	09/93 → 08/96				**FCP409**	LUCAS/TRW	
1.8 i.e. (159.BY)	74	10/94 → 08/96	**FCP370**	LUCAS/TRW				
1.8 i.e. (159.BY)	74	10/94 → 08/96				**FCP409**	LUCAS/TRW	
Tipo								
1.1	41	02/88 → 12/91	**FCP370**	LUCAS/TRW	ABS			
1.1	41	02/88 → 12/91	**FCP524**	LUCAS/TRW				
1.1	41	02/88 → 12/91				**FCP409**	LUCAS/TRW	ABS
1.1	41	01/92 → 12/96	**FCP370**	LUCAS/TRW	ABS			
1.1	41	01/92 → 12/96	**FCP524**	LUCAS/TRW				
1.1	41	01/92 → 12/96				**FCP409**	LUCAS/TRW	ABS
1.4	51, 52	02/88 → 02/93	**FCP370**	LUCAS/TRW	ABS			
1.4	51, 52	02/88 → 02/93	**FCP524**	LUCAS/TRW				
1.4	51, 52	02/88 → 02/93				**FCP409**	LUCAS/TRW	ABS
1.4	51, 52	03/93 → 12/96	**FCP370**	LUCAS/TRW	ABS			
1.4	51, 52	03/93 → 12/96	**FCP524**	LUCAS/TRW				
1.4	51, 52	03/93 → 12/96				**FCP409**	LUCAS/TRW	ABS
1.7 D	42	02/88 → 02/93	**FCP370**	LUCAS/TRW	Option			
1.7 D	42	02/88 → 02/93	**FCP524**	LUCAS/TRW				
1.7 D	42	02/88 → 02/93				**FCP409**	LUCAS/TRW	ABS
1.7 D	42	03/93 → 12/95	**FCP370**	LUCAS/TRW	Option			
1.7 D	42	03/93 → 12/95	**FCP524**	LUCAS/TRW				
1.7 D	42	03/93 → 12/95				**FCP409**	LUCAS/TRW	ABS
1.8 i.e. 16V	100	11/89 → 12/92	**FCP370**	LUCAS/TRW				
1.8 i.e. 16V	100	11/89 → 12/92				**FCP409**	LUCAS/TRW	
1.9 D	48	01/88 → 04/93	**FCP524**	LUCAS/TRW				
1.9 D	48	01/88 → 04/93				**FCP409**	LUCAS/TRW	ABS
1.9 D	48	05/93 → 12/95	**FCP370**	LUCAS/TRW				
1.9 D	48	05/93 → 12/95				**FCP409**	LUCAS/TRW	ABS
1.9 TD	59, 66	02/88 → 02/93	**FCP370**	LUCAS/TRW				
1.9 TD	59, 66	02/88 → 02/93	**FCP524**	LUCAS/TRW	Option			
1.9 TD	59, 66	02/88 → 02/93				**FCP409**	LUCAS/TRW	ABS
1.9 TD	59, 66	03/93 → 12/95	**FCP370**	LUCAS/TRW				
1.9 TD	59, 66	03/93 → 12/95	**FCP524**	LUCAS/TRW	Option			
1.9 TD	59, 66	03/93 → 12/95				**FCP409**	LUCAS/TRW	ABS
2.0	85	06/90 → 12/91	**FCP370**	LUCAS/TRW				

For material availability see page 16-18 / Per la disponibilità materiali vedere a pagina 16-18

...FIAT	kW				NOTE			NOTE
...Tipo								
2.0	85	06/90 → 12/91				FCP409	LUCAS/TRW	
2.0 16V	107	01/91 → 12/95	FCP565	LUCAS/TRW				
2.0 16V	107	01/91 → 12/95				FCP596	LUCAS/TRW	
TIPO (160_)								
1.6 (160.AE)	61	01/88 → 10/91	FCP370	LUCAS/TRW	Option			
1.6 (160.AE)	61	01/88 → 10/91	FCP524	LUCAS/TRW				
1.6 (160.AE)	61	01/88 → 10/91				FCP409	LUCAS/TRW	ABS
1.6 i.e.	66	02/88 → 05/91	FCP370	LUCAS/TRW	Option			
1.6 i.e.	66	02/88 → 05/91	FCP524	LUCAS/TRW				
1.6 i.e.	66	02/88 → 05/91				FCP409	LUCAS/TRW	ABS
1.6 i.e. (160.A1, 160.EC, 160.EB)	55	10/92 → 04/95	FCP370	LUCAS/TRW	Option			
1.6 i.e. (160.A1, 160.EC, 160.EB)	55	10/92 → 04/95	FCP524	LUCAS/TRW				
1.6 i.e. (160.A1, 160.EC, 160.EB)	55	10/92 → 04/95				FCP409	LUCAS/TRW	ABS
1.6 i.e. (160.AF)	57	07/90 → 01/93	FCP370	LUCAS/TRW	Option			
1.6 i.e. (160.AF)	57	07/90 → 01/93	FCP524	LUCAS/TRW				
1.6 i.e. (160.AF)	57	07/90 → 01/93				FCP409	LUCAS/TRW	ABS
1.8 i.e.	66	09/93 → 04/95	FCP370	LUCAS/TRW				
1.8 i.e.	66	09/93 → 04/95				FCP409	LUCAS/TRW	
1.8 i.e. (160.AY)	77	10/90 → 06/93	FCP370	LUCAS/TRW				
1.8 i.e. (160.AY)	77	10/90 → 06/93				FCP409	LUCAS/TRW	
1.8 i.e. (160.ED)	76	04/93 → 04/95	FCP370	LUCAS/TRW				
1.8 i.e. (160.ED)	76	04/93 → 04/95				FCP409	LUCAS/TRW	
1.8 i.e. (160.EQ, 160.AM)	74	10/94 → 10/95	FCP370	LUCAS/TRW				
1.8 i.e. (160.EQ, 160.AM)	74	10/94 → 10/95				FCP409	LUCAS/TRW	
2.0 i.e. (160.AJ)	80	06/90 → 03/92	FCP565	LUCAS/TRW				
2.0 i.e. (160.AJ)	80	06/90 → 03/92				FCP596	LUCAS/TRW	
2.0 i.e. (160.AT, 160.AJ)	83	03/90 → 04/95	FCP565	LUCAS/TRW				
2.0 i.e. (160.AT, 160.AJ)	83	03/90 → 04/95				FCP596	LUCAS/TRW	
2.0 i.e. 16V Sport (160.EF)	102	03/93 → 04/95	FCP565	LUCAS/TRW				
2.0 i.e. 16V Sport (160.EF)	102	03/93 → 04/95				FCP596	LUCAS/TRW	
Ulysse								
1.8 i	73	04/96 →	FCP565	LUCAS/TRW				
1.8 i	73	04/96 →				FCP850	ATE	
1.9 JTD	66	10/95 →	FCP565	LUCAS/TRW				
1.9 JTD	66	10/95 →				FCP850	ATE	ABS
2.0	89	01/95 →	FCP565	LUCAS/TRW				
2.0	89	01/95 →				FCP850	ATE	ABS
2.0 (Turbo)	108	01/95 →	FCP565	LUCAS/TRW				
2.0 (Turbo)	108	01/95 →				FCP850	ATE	
2.0 JTD	80	06/99 →	FCP565	LUCAS/TRW				
2.0 JTD	80	06/99 →				FCP850	ATE	
2.1 TD	80	01/94 →	FCP565	LUCAS/TRW				
2.1 TD	80	01/94 →				FCP850	ATE	
Uno								
0.9 45	30	01/83 → 12/94	FCP351	BENDIX				
0.9 45	33	01/83 → 12/94	FCP351	BENDIX				
0.9 45	34	01/83 → 12/94	FCP351	BENDIX				
0.9 i 45	33	01/93 → 12/94	FCP351	BENDIX				
1.0 45	32	01/83 → 12/94	FCP351	BENDIX				
1.0 i	33	06/91 → 12/94	FCP351	BENDIX				
1.0 i 45	32	01/93 → 12/94	FCP351	BENDIX				
1.1 50, 55, 60	37, 40	01/83 → 12/94	FCP351	BENDIX				
1.1 i	37	06/91 → 12/94	FCP351	BENDIX				
1.1 i	40	01/83 → 05/91	FCP351	BENDIX				
1.1 i 50, 55, 60	37, 40	01/93 → 12/94	FCP351	BENDIX				
1.1 van		01/88 → 12/94	FCP370	LUCAS/TRW				
1.1 van		01/88 → 12/94	FCP519	ATE				
1.3 (Turbo)	77, 78	03/83 → 01/90	FCP370	LUCAS/TRW				
1.3 (Turbo)	77, 78	03/83 → 01/90				FCP409	LUCAS/TRW	
1.3 70	48, 50	01/83 → 12/94	FCP351	BENDIX				
1.3 i 70	48	01/93 → 12/94	FCP351	BENDIX				
1.4 (Turbo)	82	01/90 → 12/94	FCP370	LUCAS/TRW				
1.4 (Turbo)	82	01/90 → 12/94				FCP409	LUCAS/TRW	
1.4 70	51	01/83 → 12/94	FCP351	BENDIX				
1.4 i	52, 82	06/91 → 12/94	FCP351	BENDIX				
1.4 i 70	51	01/93 → 12/94	FCP351	BENDIX				
1.4 i Selecta		01/93 → 12/94	FCP370	LUCAS/TRW				
1.4 Selecta		10/87 → 12/94	FCP370	LUCAS/TRW				
1.4 TD	52	10/86 → 10/90	FCP351	BENDIX				
1.5 75	55	10/85 → 12/94	FCP351	BENDIX				
1.5 i	55	06/91 → 12/94	FCP351	BENDIX				
1.7 D	42	01/93 → 12/94	FCP351	BENDIX				
1.7 D	42	01/93 → 12/94	FCP370	LUCAS/TRW				
1.7 D	43	06/91 → 12/94	FCP351	BENDIX				

For material availability see page 16-18 / Per la disponibilità materiali vedere a pagina 16-18

FERODO RACING
Updated on November 2020

	kW				NOTE			NOTE
...FIAT								
...Uno								
1.7 D, TD	42	04/86 → 12/94	**FCP351**	BENDIX				
1.7 D, TD	42	04/86 → 12/94	**FCP370**	LUCAS/TRW				
1.9 D, TD	59	01/85 → 12/94	**FCP370**	LUCAS/TRW				
All CS (Brazil)		01/88 → 12/91	**FCP519**	ATE				
X 1/9 (128_)								
1.3	54	10/72 → 12/81	**FCP29**	BENDIX				
1.3	54	10/75 → 06/78				**FCP22**	BENDIX	
1.3	55	05/73 → 12/79				**FCP22**	BENDIX	
1.5	56	01/77 → 03/89	**FCP29**	BENDIX				
1.5	56	06/85 → 12/89				**FCP22**	BENDIX	
1.5	63	11/78 → 12/89				**FCP22**	BENDIX	
FIAT AUTO POLAND								
Cinquecento								
0.7		03/92 →	**FCP925**	BENDIX				
0.9		03/92 →	**FCP925**	BENDIX				
1.1		03/92 →	**FCP925**	BENDIX				
Palio								
1.2 I	54	04/96 →	**FCP519**	ATE				
1.6 I	78	04/96 →	**FCP519**	ATE				
Palio Weekend								
1.2 i		07/97 →	**FCP519**	ATE				
1.6 i 16V		07/97 →	**FCP519**	ATE				
Seicento								
0.9		03/98 →	**FCP925**	BENDIX				
1.1		03/98 →	**FCP925**	BENDIX				
Siena								
1.2		04/96 →	**FCP519**	ATE				
1.6		04/96 →	**FCP519**	ATE				
FORD								
B-Max								
1.0 EcoBoost	74	10/12 →	**FCP4612**	LUCAS/TRW				
1.0 EcoBoost	88	10/12 →	**FCP4612**	LUCAS/TRW				
1.0 EcoBoost	92	12/12 →	**FCP4612**	LUCAS/TRW				
1.4	66	10/12 →	**FCP4612**	LUCAS/TRW				
1.5 TDCi	55	10/12 →	**FCP4612**	LUCAS/TRW				
1.6 TDCi	70	10/12 →	**FCP4612**	LUCAS/TRW				
1.6 Ti	77	10/12 →	**FCP4612**	LUCAS/TRW				
C-MAX								
1.6	74	02/07 →				**FCP1931**	ATE	
1.6 TDCi	66	02/07 →				**FCP1931**	ATE	
1.6 TDCi	74	02/07 →				**FCP1931**	ATE	
1.6 TDCi	80	02/07 →				**FCP1931**	ATE	
1.8	90	02/07 →				**FCP1931**	ATE	
1.8	92	02/07 →				**FCP1931**	ATE	
1.8 Flexifuel	92	02/07 →				**FCP1931**	ATE	
1.8 TDCi	85	02/07 →				**FCP1931**	ATE	
2.0	107	02/07 →				**FCP1931**	ATE	
2.0 CNG	107	04/09 →				**FCP1931**	ATE	
2.0 LPG	107	06/08 →				**FCP1931**	ATE	
2.0 TDCi	100	02/07 →				**FCP1931**	ATE	
2.0 TDCi	81	02/08 →				**FCP1931**	ATE	
2.0 TDCi	98	02/07 →				**FCP1931**	ATE	
C-MAX II								
1.0 EcoBoost	74	10/12 →				**FCP1931**	ATE	
1.0 EcoBoost	92	10/12 →				**FCP1931**	ATE	
1.6 EcoBoost	110	12/10 →				**FCP1931**	ATE	
1.6 EcoBoost	134	12/10 →				**FCP1931**	ATE	
1.6 Flexifuel	88	02/11 →				**FCP1931**	ATE	
1.6 TDCi	70	12/10 →				**FCP1931**	ATE	
1.6 TDCi	85	12/10 →				**FCP1931**	ATE	
1.6 Ti	63	12/10 →				**FCP1931**	ATE	

For material availability see page 16-18 / Per la disponibilità materiali vedere a pagina 16-18



...FORD	kW				NOTE			NOTE
...C-MAX II								
1.6 Ti	77	12/10 →				FCP1931	ATE	
1.6 Ti	92	12/10 →				FCP1931	ATE	
2.0 TDCi	100	02/11 →				FCP1931	ATE	
2.0 TDCi	103	02/11 →				FCP1931	ATE	
2.0 TDCi	120	12/10 →				FCP1931	ATE	
2.0 TDCi	85	02/11 →				FCP1931	ATE	
Capri								
1.3		05/73 → 12/75	FCP810	LUCAS/TRW				
1.3	37	01/69 → 05/73	FCP810	LUCAS/TRW				
1.3	42	01/76 → 12/83	FCP167	LUCAS/TRW				
1.3 GT	37, 44	01/69 → 12/71	FCP810	LUCAS/TRW				
1.3 GT	44	01/72 → 05/73	FCP167	LUCAS/TRW				
1.5		01/68 → 12/72	FCP167	LUCAS/TRW				
1.6	51, 56	01/72 → 12/75	FCP167	LUCAS/TRW				
1.6	56	01/69 → 12/71	FCP167	LUCAS/TRW				
1.6	66	01/76 → 12/83	FCP167	LUCAS/TRW				
1.6	66	01/84 → 12/88	FCP167	LUCAS/TRW				
1.7		01/68 → 08/69	FCP810	LUCAS/TRW				
2.0	66	01/69 → 12/71	FCP167	LUCAS/TRW				
2.0	74	01/72 → 12/75	FCP167	LUCAS/TRW				
2.0	74	01/76 → 12/83	FCP167	LUCAS/TRW				
2.0	74	01/84 → 12/88	FCP167	LUCAS/TRW				
2.3		01/78 → 12/85	FCP167	LUCAS/TRW				
2.3	79	01/74 → 12/77	FCP167	LUCAS/TRW				
2.8	118	01/78 → 12/81	FCP167	LUCAS/TRW				
2.8	118	01/82 → 12/88	FCP167	LUCAS/TRW				
3.0	102	01/76 → 12/83	FCP167	LUCAS/TRW				
3.0	102, 125	01/72 → 12/75	FCP167	LUCAS/TRW				
Consul								
2.0 V4	74	01/72 → 12/75	FCP167	LUCAS/TRW				
2.5 V6	92	01/72 → 12/75	FCP167	LUCAS/TRW				
Cortina								
1.2	38	01/65 → 07/65	FCP809	LUCAS/TRW				
1.2	38	07/65 → 12/66	FCP810	LUCAS/TRW				
1.3	46	01/63 → 12/70	FCP810	LUCAS/TRW				
1.3	41	01/71 → 05/74	FCP167	LUCAS/TRW				
1.3	41	06/74 → 12/82	FCP167	LUCAS/TRW				
1.3	42	06/74 → 12/82	FCP167	LUCAS/TRW				
1.3	44	06/74 → 12/82	FCP167	LUCAS/TRW				
1.5	47	01/63 → 12/64	FCP167	LUCAS/TRW				
1.5	47	01/65 → 07/65	FCP809	LUCAS/TRW				
1.5	47	07/65 → 12/66	FCP810	LUCAS/TRW				
1.5	47	01/67 → 12/70	FCP810	LUCAS/TRW				
1.6		01/71 → 05/74	FCP167	LUCAS/TRW				
1.6	53, 66	06/74 → 12/79	FCP167	LUCAS/TRW				
1.6	55	01/80 → 12/82	FCP167	LUCAS/TRW				
1.6	66	01/67 → 12/70	FCP810	LUCAS/TRW				
1.6 E, GT	66	01/66 → 12/70	FCP810	LUCAS/TRW				
1.6 GT, SW Estate	53	01/71 → 05/74	FCP167	LUCAS/TRW				
2.0	73, 74	01/71 → 12/79	FCP167	LUCAS/TRW				
2.0	74	01/80 → 12/82	FCP167	LUCAS/TRW				
2.3	79	01/76 → 12/79	FCP167	LUCAS/TRW				
2.3	84	01/80 → 12/82	FCP167	LUCAS/TRW				
Cougar								
2.0 16V	96	08/98 → 12/01	FCP766	ATE				
2.5 V6 24V	125	08/98 → 12/01	FCP766	ATE				
Courier								
1.3 50		01/96 → 01/00	FCP1081	ATE				
1.3 50	37, 44	10/91 → 01/96	FCP206	ATE				
1.3 i	50	02/00 →	FCP1394	ATE				
1.4 16V	65	05/96 →	FCP1081	ATE				
1.8 D	50	02/00 →	FCP1394	ATE				
1.8 D 50		02/96 → 01/00	FCP1081	ATE				
1.8 D 50	44, 55	10/91 → 01/96	FCP206	ATE				
1.8 TDi	50	02/00 →	FCP1394	ATE				

For material availability see page 16-18 / Per la disponibilità materiali vedere a pagina 16-18

FERODO RACING
Updated on November 2020

...FORD	kW				NOTE			NOTE
Escort (1)								
1.1 SW Estate	33	01/69 → 12/70	**FCP809**	LUCAS/TRW				
1.1 SW Estate	33	01/71 → 12/74	**FCP809**	LUCAS/TRW				
1.3		01/69 → 12/70	**FCP809**	LUCAS/TRW				
1.3		01/71 → 12/74	**FCP809**	LUCAS/TRW				
1.3 GT, SW Estate	42, 44	01/69 → 12/70	**FCP809**	LUCAS/TRW				
1.3 GT, SW Estate	42, 44	01/71 → 12/74	**FCP809**	LUCAS/TRW				
1.6 TC, Mexico, RS		01/72 → 12/74	**FCP167**	LUCAS/TRW				
2.0 RS	81	01/72 → 05/73	**FCP167**	LUCAS/TRW				
2.0 RS	81	06/73 → 12/74	**FCP167**	LUCAS/TRW				
Escort (2)								
1.1	33	01/75 → 12/80	**FCP167**	LUCAS/TRW				
1.3	40, 42	01/75 → 08/80	**FCP167**	LUCAS/TRW				
1.3 Sport, Ghia	51	01/75 → 08/80	**FCP167**	LUCAS/TRW				
1.6		01/75 → 08/80	**FCP167**	LUCAS/TRW				
1.8 RS1800 16V	115	01/75 → 08/80	**FCP167**	LUCAS/TRW				
2.0 RS2000 16V	110	01/75 → 12/80	**FCP276**	ATE				
Escort (3)								
1.1	37	07/80 → 02/83	**FCP206**	ATE				
1.1	37	03/83 → 12/85	**FCP206**	ATE				
1.3	51	09/80 → 02/83	**FCP206**	ATE				
1.3	51	03/83 → 12/85	**FCP206**	ATE				
1.4	55	08/80 → 12/85	**FCP206**	ATE				
1.6	58, 71	09/80 → 02/83	**FCP206**	ATE				
1.6	58, 71	03/83 → 12/86	**FCP206**	ATE				
1.6 D	40	08/80 → 11/85	**FCP206**	ATE				
1.6 i XR3i, Cabrio	77	01/80 → 09/82	**FCP206**	ATE				
1.6 i XR3i, Cabrio	77	10/82 → 01/85	**FCP206**	ATE				
1.6 RS Turbo	97	02/85 → 12/86	**FCP276**	ATE				
1.6 RS1600 (Turbo)	77	11/82 → 12/86	**FCP206**	ATE				
Escort (4)								
1.1	40	01/86 → 08/90	**FCP206**	ATE				
1.3	44	01/86 → 08/90	**FCP206**	ATE				
1.4	55	01/86 → 12/90	**FCP206**	ATE				
1.6		01/86 → 10/90	**FCP206**	ATE				
1.6 D	40	01/86 → 03/89	**FCP206**	ATE				
1.6 i XR3i, Cabrio	77, 80	02/85 → 09/90	**FCP206**	ATE				
1.6 RS Turbo	97	01/87 → 08/90	**FCP276**	ATE				
1.8 D		09/88 → 10/90	**FCP206**	ATE				
Escort (5)								
1.3 i	44	07/90 → 09/92	**FCP617**	BENDIX				
1.3 Sedan/SW Estate	44	01/90 → 08/97	**FCP617**	BENDIX				
1.4 i	54	10/90 → 03/93	**FCP617**	BENDIX				
1.4 Sedan/SW Estate	54	01/90 → 08/97	**FCP617**	BENDIX				
1.6 i	63	10/90 →	**FCP617**	BENDIX				
1.6 i	66	10/90 →	**FCP617**	BENDIX				
1.6 i	77	10/90 →	**FCP617**	BENDIX				
1.6 Sedan/SW Estate	63	01/90 → 08/97	**FCP617**	BENDIX				
1.6 Sedan/SW Estate	66	01/90 → 08/97	**FCP617**	BENDIX				
1.6 Sedan/SW Estate	77	01/90 → 08/97	**FCP617**	BENDIX				
1.8 i XR3i 16V	77	01/91 → 12/94	**FCP617**	BENDIX				
1.8 i XR3i 16V	96	01/91 → 12/94	**FCP276**	ATE				
1.8 Sedan/SW Estate	44	10/90 → 08/97	**FCP617**	BENDIX				
1.8 TD	44	10/90 → 08/97	**FCP617**	BENDIX				
2.0 RS Cosworth 16V + 4x4	162	09/91 → 08/97	**FCP685**	ATE				
2.0 RS Cosworth 16V + 4x4	162	09/91 → 08/97				**FCP408**	LUCAS/TRW	
2.0 RS2000 16V	110	09/91 → 08/97	**FCP276**	ATE				
Escort (6)								
1.3 i	44	09/92 → 01/95	**FCP617**	BENDIX				
1.3 i SW Estate	44	01/94 → 08/97	**FCP617**	BENDIX				
1.4 i	54	04/93 → 12/94	**FCP617**	BENDIX				
1.4 i SW Estate	54	01/94 → 08/97	**FCP617**	BENDIX				
1.6 i	63	09/92 →	**FCP617**	BENDIX				
1.6 i	66	01/92 → 08/97	**FCP617**	BENDIX				
1.6 i	77	09/92 →	**FCP617**	BENDIX				
Escort (7)								
1.3 i	44	01/95 → 10/98	**FCP617**	BENDIX				
1.4	55	08/97 → 12/99	**FCP617**	BENDIX				
1.4 i	54	01/95 → 08/97	**FCP617**	BENDIX				
1.6 16V	66	08/97 →	**FCP617**	BENDIX				
1.6 i	63	01/95 →	**FCP617**	BENDIX				

For material availability see page 16-18 / Per la disponibilità materiali vedere a pagina 16-18

...FORD	kW				NOTE			NOTE
...Escort (7)								
1.6 i	63	01/95 →	**FCP617**	BENDIX				
1.6 i	66	01/95 →	**FCP617**	BENDIX				
1.6 i	77	01/95 →	**FCP617**	BENDIX				
1.8	77	08/97 → 12/99	**FCP617**	BENDIX				
1.8	85	08/97 → 12/99	**FCP617**	BENDIX				
1.8	96	08/97 → 12/99	**FCP617**	BENDIX				
1.8 D	44	01/95 → 08/97	**FCP617**	BENDIX				
1.8 i 16V		01/96 → 08/97	**FCP276**	ATE				
1.8 i 16V		08/97 → 12/99	**FCP276**	ATE				
1.8 TD		08/97 →	**FCP617**	BENDIX				
Escort Van								
1.1	30, 35	01/75 → 12/77	**FCP167**	LUCAS/TRW				
1.1	33	09/76 → 08/80	**FCP167**	LUCAS/TRW				
1.1	40	09/80 → 12/90	**FCP206**	ATE				
1.3	44	09/76 → 08/80	**FCP167**	LUCAS/TRW				
1.3	44	09/80 → 12/90	**FCP206**	ATE				
1.4	40	09/80 → 12/90	**FCP206**	ATE				
1.4 40, 60		01/91 → 08/97	**FCP617**	BENDIX				
1.4 40, 60		09/97 →	**FCP617**	BENDIX				
1.4 55, 75	55	01/95 →	**FCP617**	BENDIX				
1.4 i 40, 60		04/93 → 08/97	**FCP617**	BENDIX				
1.4 i 55, 75	55	04/93 → 08/97	**FCP617**	BENDIX				
1.6		09/80 → 12/90	**FCP206**	ATE				
1.6 40, 60		01/91 → 08/97	**FCP617**	BENDIX				
1.6 40, 60		09/97 →	**FCP617**	BENDIX				
1.6 i 55, 75		01/95 → 08/97	**FCP617**	BENDIX				
1.8 D		09/80 → 12/90	**FCP206**	ATE				
1.8 D 40, 60		04/93 → 08/97	**FCP617**	BENDIX				
1.8 D 40, 60		01/91 → 12/99	**FCP617**	BENDIX				
1.8 D 55		01/95 → 08/97	**FCP617**	BENDIX				
1.8 TD 75		09/97 → 12/99	**FCP617**	BENDIX				
Fiesta								
1.6 R5 rally (asphalt & gravel)		01/13 →	**FRP3087**	BREMBO				
1.6 R5 rally (asphalt & gravel)		01/13 →	**FRP3140**	AP RACING				
1.6 R5 rally (asphalt & gravel)		01/13 →				**FRP3087**	BREMBO	
1.6 R5 rally (asphalt & gravel)		01/13 →				**FRP3140**	AP RACING	
Fiesta (1)								
1.6 XR2	71	12/81 → 09/83	**FCP206**	ATE				
Fiesta (2)								
1.6 XR2	71	10/83 → 01/89	**FCP206**	ATE				
Fiesta (3)								
0.9		03/89 → 12/96	**FCP1082**	ATE				
1.0		03/89 → 12/95	**FCP206**	ATE				
1.1	50	04/89 → 12/96	**FCP206**	ATE	ALB			
1.1	50	04/89 → 12/96	**FCP1082**	ATE				
1.3	44	08/91 → 12/95	**FCP206**	ATE	ALB			
1.3	44	08/91 → 12/95	**FCP1082**	ATE				
1.4	54, 55	04/89 → 10/95	**FCP206**	ATE	ALB			
1.4	54, 55	04/89 → 10/95	**FCP1082**	ATE				
1.6 i	131	04/89 → 12/95	**FCP206**	ATE				
1.6 i 16V	131	01/93 → 12/95	**FCP206**	ATE				
1.6 i XR2i, 1.6S, RS (Turbo)	77, 96	04/89 → 03/92	**FCP206**	ATE				
1.8 16V	96	04/89 → 12/95	**FCP206**	ATE				
1.8 D	44	04/89 → 12/95	**FCP1082**	ATE	Solid			
1.8 D (+ SCS)	44	04/89 → 12/95	**FCP206**	ATE	Vented			
1.8 Si 16V	77	01/92 → 12/95	**FCP206**	ATE				
1.8 XR2, RS Turbo 16V	96	04/89 → 12/95	**FCP206**	ATE				
Fiesta (4)								
1.2 16V	55	01/96 → 01/00	**FCP1081**	ATE	Vented			
1.2 16V	55	01/96 → 01/00	**FCP1082**	ATE	Solid			
1.2 i 16V		02/00 → 10/01	**FCP1394**	ATE				
1.25 i 16V	55	01/96 → 01/00	**FCP1081**	ATE				
1.25 i 16V	55	01/96 → 01/00	**FCP1082**	ATE				
1.25 i 16V	55	02/00 → 10/01	**FCP1394**	ATE				
1.3	44	01/96 → 01/00	**FCP1081**	ATE	Vented			
1.3	44	01/96 → 01/00	**FCP1082**	ATE	Solid			
1.3 i	37	02/00 → 10/01	**FCP1394**	ATE				
1.4 16V	65	01/96 → 01/00	**FCP1081**	ATE	Vented			
1.4 16V	65	01/96 → 01/00	**FCP1082**	ATE	Solid			
1.4 i 16V	66	02/00 →	**FCP1394**	ATE				

For material availability see page 16-18 / Per la disponibilità materiali vedere a pagina 16-18

FERODO RACING
Updated on November 2020

...FORD	kW				NOTE			NOTE
...Fiesta (4)								
1.6 i 16V	76	02/00 → 10/01	**FCP1394**	ATE				
1.8 D	44	01/96 → 01/00	**FCP1081**	ATE	Vented			
1.8 D	44	01/96 → 01/00	**FCP1082**	ATE	Solid			
1.8 TDi	55	02/00 → 10/01	**FCP1394**	ATE				
Fiesta (5)								
1.3 i	51	11/01 →	**FCP1394**	ATE				
1.4 i 16V	59	11/01 →	**FCP1394**	ATE				
1.4 TDCi	50	11/01 →	**FCP1394**	ATE				
1.6 i 16V	74	11/01 →	**FCP1394**	ATE				
2.0 ST150	110	01/05 →	**FCP1568**	ATE				
2.0 ST150	110	01/05 →				**FCP1319**	LUCAS/TRW	
R2 (Asphalt)	120	10/09 →	**FRP3116**	AP RACING	Asphalt			
R2 (Asphalt)	120	10/09 →				**FCP1540**	ATE	
R2 (Gravel)	120	10/09 →	**FRP3097**	AP RACING	285mm disc			
R2 (Gravel)	120	10/09 →				**FCP1540**	ATE	
Fiesta (6)								
1.0	48	01/13 →	**FCP4612**	LUCAS/TRW				
1.0	59	10/12 →	**FCP4612**	LUCAS/TRW				
1.0 EcoBoost	74	01/13 →	**FCP4612**	LUCAS/TRW				
1.0 EcoBoost	92	09/12 →	**FCP4612**	LUCAS/TRW				
1.2 16V	44	08/08 →	**FCP4426**	LUCAS/TRW				
1.2 16V	60	08/08 →	**FCP4426**	LUCAS/TRW				
1.4 16V	68	01/09 →	**FCP4426**	LUCAS/TRW				
1.4 16V	71	10/08 →	**FCP4426**	LUCAS/TRW				
1.4 TDCi 16V	50	08/08 →	**FCP4426**	LUCAS/TRW				
1.5 TDCi	55	09/12 →	**FCP4612**	LUCAS/TRW				
1.6 16V	88	10/08 →	**FCP4426**	LUCAS/TRW				
1.6 ST	134	03/13 →	**FCP4612**	LUCAS/TRW	For 278mm brake discs			
1.6 ST	134	03/13 →				**FCP1319**	LUCAS/TRW	
1.6 TDCi 16V	55	02/09 →	**FCP4426**	LUCAS/TRW				
1.6 TDCi 16V	66	08/08 →	**FCP4426**	LUCAS/TRW				
1.6 TDCi 8V	70	03/10 →	**FCP4426**	LUCAS/TRW				
1.6 Ti	77	09/12 →	**FCP4612**	LUCAS/TRW				
Fiesta (7)								
1.0 EcoBoost	74	01/17 →	**FCP4816**	ATE				
1.0 EcoBoost	74	01/17 →				**FCP5130**	ATE	
1.0 EcoBoost	92	01/17 →	**FCP4816**	ATE				
1.0 EcoBoost	92	01/17 →				**FCP5130**	ATE	
1.1	51	01/17 →	**FCP4816**	ATE				
1.1	51	01/17 →				**FCP5130**	ATE	
1.1	63	01/17 →	**FCP4816**	ATE				
1.1	63	01/17 →				**FCP5130**	ATE	
1.5 TDCi	63	01/17 →	**FCP4816**	ATE				
1.5 TDCi	63	01/17 →				**FCP5130**	ATE	
1.5 TDCi	88	01/17 →	**FCP4816**	ATE				
1.5 TDCi	88	01/17 →				**FCP5130**	ATE	
ST EcoBoost	147	04/18 →	**FCP4816**	ATE				
ST EcoBoost	147	04/18 →				**FCP5130**	ATE	
Fiesta Van								
1.1	37	04/89 → 01/96	**FCP206**	ATE				
1.1	37	04/89 → 01/96	**FCP1082**	ATE				
1.3	44	04/89 → 01/96	**FCP206**	ATE				
1.3	44	04/89 → 01/96	**FCP1082**	ATE				
1.3 i 35	44	01/96 →	**FCP1081**	ATE				
1.3 i 35	44	01/96 →	**FCP1082**	ATE				
1.4 i	66	01/96 → 10/99	**FCP1081**	ATE				
1.4 i	66	01/96 → 10/99	**FCP1082**	ATE				
1.8 D	44	04/89 → 01/96	**FCP206**	ATE				
1.8 D	44	04/89 → 01/96	**FCP1082**	ATE				
1.8 D 35	44	01/96 →	**FCP1081**	ATE				
1.8 D 35	44	01/96 →	**FCP1082**	ATE				
Fiesta Van (6)								
1.2 16V	60	08/08 →	**FCP4426**	LUCAS/TRW				
1.4 TDCi 16V	50	08/08 →	**FCP4426**	LUCAS/TRW				
1.5 TDCi	55	10/12 →	**FCP4612**	LUCAS/TRW				
1.6 TDCi 16V	66	08/08 →	**FCP4426**	LUCAS/TRW				
1.6 TDCi 8V	70	02/10 →	**FCP4426**	LUCAS/TRW				

For material availability see page 16-18 / Per la disponibilità materiali vedere a pagina 16-18

...FORD	kW				NOTE			NOTE
FOCUS C-MAX								
1.6	74	10/03 → 03/07				FCP1931	ATE	
1.6 TDCi	66	02/05 → 03/07				FCP1931	ATE	
1.6 TDCi	80	10/03 → 03/07				FCP1931	ATE	
1.6 Ti	85	08/04 → 03/07				FCP1931	ATE	
1.8	88	10/03 → 03/07				FCP1931	ATE	
1.8	92	04/04 → 03/07				FCP1931	ATE	
1.8 Flexifuel	92	01/06 → 03/07				FCP1931	ATE	
1.8 TDCi	85	01/05 → 03/07				FCP1931	ATE	
2.0	107	03/04 → 03/07				FCP1931	ATE	
2.0 TDCi	100	10/03 → 03/07				FCP1931	ATE	
2.0 TDCi	98	10/03 → 03/07				FCP1931	ATE	
FOCUS Estate (DNW)								
ST170	127	09/02 → 11/04	FCP1568	ATE				
FOCUS I (DAW, DBW)								
1.4 16V	55	08/98 → 11/04	FCP1318	ATE				
1.6 16V	74	08/98 → 11/04	FCP1318	ATE				
1.8 16V	85	08/98 → 11/04	FCP1318	ATE				
1.8 16V	85	08/98 → 11/04				FCP541	LUCAS/TRW	
1.8 TDCi	85	10/01 → 11/04	FCP1318	ATE				
1.8 TDCi	85	10/01 → 11/04				FCP1319	LUCAS/TRW	
1.8 TDDi	66	08/98 → 11/04	FCP1318	ATE				
2.0 16V	96	10/98 → 11/04	FCP1318	ATE				
2.0 16V	96	10/98 → 11/04				FCP541	LUCAS/TRW	
2.0 RS	158	10/02 → 11/04	FCP1348	BREMBO				
2.0 RS	158	10/02 → 11/04	FCP1568	ATE				
2.0 RS	158	10/02 → 11/04				FCP1319	LUCAS/TRW	
2.0 ST170	127	03/02 → 10/04	FCP1568	ATE				
2.0 ST170	127	03/02 → 10/04				FCP1319	LUCAS/TRW	
WRC specs (asphalt spec)	223	10/98 → 12/07	FRP3113	BREMBO	8-pot			
FOCUS II (DA_)								
1.4	59	11/04 →				FCP1931	ATE	
1.6	74	11/04 →				FCP1931	ATE	
1.6 LPG	85	10/09 →				FCP1931	ATE	
1.6 TDCi	66	01/05 →				FCP1931	ATE	
1.6 TDCi	74	11/04 →				FCP1931	ATE	
1.6 TDCi	80	11/04 →				FCP1931	ATE	
1.6 Ti	85	11/04 →				FCP1931	ATE	
1.8	92	03/06 →				FCP1931	ATE	
1.8 Flexifuel	92	01/06 →				FCP1931	ATE	
1.8 Flexifuel	96	12/05 →				FCP1931	ATE	
1.8 TDCi	85	01/05 →				FCP1931	ATE	
2.0	107	11/04 →				FCP1931	ATE	
2.0 CNG	107	04/09 →				FCP1931	ATE	
2.0 LPG	107	06/08 →				FCP1931	ATE	
2.0 TDCi	100	11/04 →				FCP1931	ATE	
2.0 TDCi	81	02/08 →				FCP1931	ATE	
2.0 TDCi	98	11/04 →				FCP1931	ATE	
2.5 RS	224	01/09 →	FCP4044	LUCAS/TRW				
2.5 RS	224	01/09 →				FCP1917	LUCAS/TRW	
2.5 ST	166	10/05 →	FCP1706	ATE				
2.5 ST	166	10/05 →				FCP1931	ATE	
FOCUS II Convertible								
1.6	74	10/06 →				FCP1931	ATE	
2.0	107	10/06 →				FCP1931	ATE	
2.0 TDCi	100	10/06 →				FCP1931	ATE	
FOCUS II Estate (DA_)								
1.4	59	11/04 →				FCP1931	ATE	
1.6	74	11/04 →				FCP1931	ATE	
1.6 LPG	85	10/09 →				FCP1931	ATE	
1.6 TDCi	66	11/04 →				FCP1931	ATE	
1.6 TDCi	74	11/04 →				FCP1931	ATE	
1.6 TDCi	80	11/04 →				FCP1931	ATE	
1.6 TDCi	81	12/07 →				FCP1931	ATE	
1.6 Ti	85	11/04 →				FCP1931	ATE	
1.8	92	03/06 →				FCP1931	ATE	
1.8 Flexifuel	92	01/06 →				FCP1931	ATE	
1.8 Flexifuel	97	12/05 →				FCP1931	ATE	
1.8 TDCi	85	11/04 →				FCP1931	ATE	
2.0	107	11/04 →				FCP1931	ATE	
2.0 LPG	107	06/08 →				FCP1931	ATE	
2.0 TDCi	100	11/04 →				FCP1931	ATE	

For material availability see page 16-18 / Per la disponibilità materiali vedere a pagina 16-18

FERODO RACING
Updated on November 2020

...FORD	kW				NOTE			NOTE
...FOCUS II Estate (DA_)								
2.0 TDCi	81	02/08 →				FCP1931	ATE	
2.0 TDCi	98	11/04 →				FCP1931	ATE	
FOCUS II Saloon (DA_)								
1.4	59	04/05 →				FCP1931	ATE	
1.6	74	04/05 →				FCP1931	ATE	
1.6 TDCi	66	04/05 →				FCP1931	ATE	
1.6 TDCi	74	04/05 →				FCP1931	ATE	
1.6 TDCi	80	04/05 →				FCP1931	ATE	
1.6 Ti	85	04/05 →				FCP1931	ATE	
1.8	92	03/06 →				FCP1931	ATE	
1.8 Flexifuel	92	06/06 →				FCP1931	ATE	
1.8 Flexifuel	96	12/05 →				FCP1931	ATE	
1.8 TDCi	85	04/05 →				FCP1931	ATE	
2.0	107	04/05 →				FCP1931	ATE	
2.0 TDCi	100	04/05 →				FCP1931	ATE	
2.0 TDCi	81	02/08 →				FCP1931	ATE	
FOCUS III								
1.0 EcoBoost	74	02/12 →				FCP1931	ATE	
1.0 EcoBoost	92	02/12 →				FCP1931	ATE	
1.6 EcoBoost	110	04/11 →				FCP1931	ATE	
1.6 EcoBoost	134	04/11 →				FCP1931	ATE	
1.6 Flexifuel	88	04/11 →				FCP1931	ATE	
1.6 LPG	88	02/12 →				FCP1931	ATE	
1.6 TDCi	70	04/11 →				FCP1931	ATE	
1.6 TDCi	85	04/11 →				FCP1931	ATE	
1.6 Ti	63	08/11 →				FCP1931	ATE	
1.6 Ti	77	04/11 →				FCP1931	ATE	
1.6 Ti	92	04/11 →				FCP1931	ATE	
2.0 ST	184	07/12 →	FCP4416	ATE	brake disc diameter 320mm			
2.0 ST	184	07/12 →				FCP1931	ATE	
2.0 TDCi	100	04/11 →				FCP1931	ATE	
2.0 TDCi	103	04/11 →				FCP1931	ATE	
2.0 TDCi	120	04/11 →				FCP1931	ATE	
2.0 TDCi	85	04/11 →				FCP1931	ATE	
2.3 RS AWD	257	07/15 →	FCP4830	BREMBO				
2.3 RS AWD	257	07/15 →				FCP1931	ATE	
FOCUS III Saloon								
1.0 EcoBoost	74	02/12 →				FCP1931	ATE	
1.0 EcoBoost	92	02/12 →				FCP1931	ATE	
1.6 EcoBoost	110	04/11 →				FCP1931	ATE	
1.6 EcoBoost	134	04/11 →				FCP1931	ATE	
1.6 Flexifuel	88	04/11 →				FCP1931	ATE	
1.6 TDCi	70	04/11 →				FCP1931	ATE	
1.6 TDCi	85	04/11 →				FCP1931	ATE	
1.6 Ti	63	08/11 →				FCP1931	ATE	
1.6 Ti	77	04/11 →				FCP1931	ATE	
1.6 Ti	92	04/11 →				FCP1931	ATE	
2.0 TDCi	100	04/11 →				FCP1931	ATE	
2.0 TDCi	103	04/11 →				FCP1931	ATE	
2.0 TDCi	120	04/11 →				FCP1931	ATE	
2.0 TDCi	85	04/11 →				FCP1931	ATE	
FOCUS III Turnier								
1.0 EcoBoost	74	02/12 →				FCP1931	ATE	
1.0 EcoBoost	92	02/12 →				FCP1931	ATE	
1.6 EcoBoost	110	05/11 →				FCP1931	ATE	
1.6 EcoBoost	134	05/11 →				FCP1931	ATE	
1.6 Flexifuel	88	05/11 →				FCP1931	ATE	
1.6 LPG	88	02/12 →				FCP1931	ATE	
1.6 TDCi	70	05/11 →				FCP1931	ATE	
1.6 TDCi	85	05/11 →				FCP1931	ATE	
1.6 Ti	63	08/11 →				FCP1931	ATE	
1.6 Ti	77	05/11 →				FCP1931	ATE	
1.6 Ti	92	05/11 →				FCP1931	ATE	
2.0 TDCi	100	05/11 →				FCP1931	ATE	
2.0 TDCi	103	05/11 →				FCP1931	ATE	
2.0 TDCi	120	05/11 →				FCP1931	ATE	
2.0 TDCi	85	05/11 →				FCP1931	ATE	

For material availability see page 16-18 / Per la disponibilità materiali vedere a pagina 16-18

...FORD	kW				NOTE			NOTE
Fusion								
1.4 i	59	08/02 →	**FCP1394**	ATE				
1.4 TDCi	50	08/02 →	**FCP1394**	ATE				
1.6 i	74	08/02 →	**FCP1394**	ATE				
Galaxy								
1.9 TDi	66, 81	06/95 → 04/00	**FCP590**	ATE				
1.9 TDi	66, 81	06/95 → 04/00				**FCP541**	LUCAS/TRW	
2.0	85	06/95 → 04/00	**FCP590**	ATE				
2.0	85	06/95 → 04/00				**FCP541**	LUCAS/TRW	
2.3 16V	107	06/95 → 04/00	**FCP590**	ATE				
2.3 16V	107	06/95 → 04/00				**FCP541**	LUCAS/TRW	
2.8	128	06/95 → 04/00	**FCP590**	ATE				
2.8	128	06/95 → 04/00				**FCP541**	LUCAS/TRW	
Galaxy III								
1.8 TDCi	74	05/06 →				**FCP1917**	LUCAS/TRW	Without EPB
1.8 TDCi	92	05/06 →				**FCP1917**	LUCAS/TRW	Without EPB
2.0	107	05/06 →				**FCP1917**	LUCAS/TRW	Without EPB
2.0 TDCi	103	05/06 →				**FCP1917**	LUCAS/TRW	Without EPB
2.0 TDCi	85	11/07 →				**FCP1917**	LUCAS/TRW	Without EPB
2.0 TDCi	96	05/06 →				**FCP1917**	LUCAS/TRW	Without EPB
2.2 TDCi	129	03/08 →				**FCP1917**	LUCAS/TRW	Without EPB
2.3	118	07/07 →				**FCP1917**	LUCAS/TRW	Without EPB
Granada								
1.6		01/77 → 06/79	**FCP167**	LUCAS/TRW				
1.6	55	07/79 → 07/81	**FCP167**	LUCAS/TRW				
1.6	55	08/81 → 08/82	**FCP167**	LUCAS/TRW				
1.6	55	09/82 → 12/85	**FCP167**	LUCAS/TRW				
1.7 Saloon	51	01/77 → 08/81	**FCP167**	LUCAS/TRW				
1.7 Saloon	51	09/81 → 04/85	**FCP167**	LUCAS/TRW				
1.8	66	05/85 → 07/87	**FCP276**	ATE				
1.8	66	05/85 → 07/87				**FCP408**	LUCAS/TRW	
1.9		03/78 → 08/82	**FCP167**	LUCAS/TRW				
2.0	66	01/75 → 04/79	**FCP167**	LUCAS/TRW				
2.0	74, 77	05/79 → 02/85	**FCP167**	LUCAS/TRW				
2.0	80	05/85 → 04/92	**FCP276**	ATE				
2.0	80	05/85 → 04/92				**FCP408**	LUCAS/TRW	
2.0	85	05/85 → 04/92	**FCP276**	ATE				
2.0	85	05/85 → 04/92				**FCP408**	LUCAS/TRW	
2.0	92	05/85 → 04/92	**FCP276**	ATE				
2.0	92	05/85 → 04/92				**FCP408**	LUCAS/TRW	
2.0 Ghia	85	05/92 → 10/94	**FCP766**	ATE				
2.0 Ghia	85	05/92 → 10/94				**FCP408**	LUCAS/TRW	
2.1 D	46	09/79 → 06/82	**FCP167**	LUCAS/TRW				
2.3	79	05/79 → 02/85	**FCP167**	LUCAS/TRW				
2.3 SW Estate/Saloon	79	09/77 → 04/79	**FCP167**	LUCAS/TRW				
2.4	96	01/87 → 08/89	**FCP276**	ATE				
2.4	96	01/87 → 08/89				**FCP408**	LUCAS/TRW	
2.5 D/TD		08/86 → 01/92	**FCP276**	ATE				
2.5 D/TD		08/86 → 01/92				**FCP408**	LUCAS/TRW	
2.5 Saloon		01/76 → 08/77	**FCP167**	LUCAS/TRW				
2.8	110	05/85 → 01/87	**FCP276**	ATE				
2.8	110	05/85 → 01/87				**FCP408**	LUCAS/TRW	
2.9		01/87 → 03/92	**FCP276**	ATE				
2.9		01/87 → 03/92				**FCP408**	LUCAS/TRW	
2.9 24V	143	03/92 → 10/94	**FCP276**	ATE				
2.9 24V	143	03/92 → 10/94				**FCP408**	LUCAS/TRW	
2.9 Cosworth 24V		08/92 → 12/95				**FCP408**	LUCAS/TRW	
2.9 Ghia/Saloon/SW Estate		05/92 → 10/94	**FCP766**	ATE				
2.9 Ghia/Saloon/SW Estate		05/92 → 10/94				**FCP408**	LUCAS/TRW	
3.0 Saloon	101	01/76 → 08/77	**FCP167**	LUCAS/TRW				
GRAND C-MAX								
1.6 EcoBoost	110	12/10 →				**FCP1931**	ATE	
1.6 EcoBoost	134	12/10 →				**FCP1931**	ATE	
1.6 TDCi	70	12/10 →				**FCP1931**	ATE	
1.6 TDCi	85	12/10 →				**FCP1931**	ATE	
1.6 Ti	77	12/10 →				**FCP1931**	ATE	
1.6 Ti	92	12/10 →				**FCP1931**	ATE	
2.0 TDCi	100	02/11 →				**FCP1931**	ATE	
2.0 TDCi	103	02/11 →				**FCP1931**	ATE	
2.0 TDCi	120	12/10 →				**FCP1931**	ATE	
2.0 TDCi	85	02/11 →				**FCP1931**	ATE	

For material availability see page 16-18 / Per la disponibilità materiali vedere a pagina 16-18

FERODO RACING
Updated on November 2020

...FORD	kW				NOTE				NOTE
Ka									
1.3	37, 44	10/96 → 01/00	FCP1081	ATE	Vented				
1.3	37, 44	10/96 → 01/00	FCP1082	ATE	Solid				
Kuga I									
2.0 TDCi	100	03/08 →				FCP1917	LUCAS/TRW		
2.0 TDCi	103	03/10 →				FCP1917	LUCAS/TRW		
2.0 TDCi 4x4	100	03/08 →				FCP1917	LUCAS/TRW		
2.0 TDCi 4x4	103	03/10 →				FCP1917	LUCAS/TRW		
2.0 TDCi 4x4	120	03/10 →				FCP1917	LUCAS/TRW		
2.5	147	03/09 →				FCP1917	LUCAS/TRW		
2.5 4x4	147	03/09 →				FCP1917	LUCAS/TRW		
Kuga II									
1.6 EcoBoost	110	03/13 →	FCP4416	ATE					
1.6 EcoBoost 4x4	134	03/13 →	FCP4416	ATE					
2.0 TDCi	103	03/13 →	FCP4416	ATE					
2.0 TDCi 4x4	103	03/13 →	FCP4416	ATE					
2.0 TDCi 4x4	120	03/13 →	FCP4416	ATE					
Mondeo									
1.6 16V	66	03/93 → 12/00	FCP766	ATE					
1.8 16V	85	03/93 → 12/00	FCP766	ATE					
1.8 TD		03/93 → 12/00	FCP766	ATE					
2.0 16V	100	03/93 → 12/00	FCP766	ATE					
2.0 i Si, Ghia, 4x4 16V	100	03/93 → 12/00	FCP766	ATE	14" Wheel				
Mondeo II									
1.6 i 16V	66	08/96 → 12/00	FCP766	ATE					
1.8 i 16V	85	08/96 → 12/00	FCP766	ATE					
1.8 TD	66	08/96 → 12/00	FCP766	ATE					
2.0 i 16V	100	08/96 → 12/00	FCP766	ATE					
Mondeo IV (BA7)									
1.6 Ti	81	03/07 →				FCP1917	LUCAS/TRW	Without EPB	
1.6 Ti	92	03/07 →				FCP1917	LUCAS/TRW	Without EPB	
1.8 TDCi	74	03/07 →				FCP1917	LUCAS/TRW	Without EPB	
2.0	107	03/07 →				FCP1917	LUCAS/TRW	Without EPB	
2.0 TDCi	103	03/07 →				FCP1917	LUCAS/TRW	Without EPB	
2.0 TDCi	85	11/07 →				FCP1917	LUCAS/TRW	Without EPB	
2.0 TDCi	96	03/07 →				FCP1917	LUCAS/TRW	Without EPB	
2.2 TDCi	129	03/08 →				FCP1917	LUCAS/TRW	Without EPB	
2.3	118	07/07 →				FCP1917	LUCAS/TRW	Without EPB	
2.5	162	03/07 →				FCP1917	LUCAS/TRW	Without EPB	
Mondeo IV Saloon (BA7)									
1.6 Ti	81	03/07 →				FCP1917	LUCAS/TRW	Without EPB	
1.6 Ti	92	03/07 →				FCP1917	LUCAS/TRW	Without EPB	
2.0 TDCi	103	03/07 →				FCP1917	LUCAS/TRW	Without EPB	
2.0 TDCi	96	03/07 →				FCP1917	LUCAS/TRW	Without EPB	
Mondeo SW IV									
1.8 TDCi	74	03/07 →				FCP1917	LUCAS/TRW	Without EPB	
2.0	107	03/07 →				FCP1917	LUCAS/TRW	Without EPB	
2.0 TDCi	85	11/07 →				FCP1917	LUCAS/TRW	Without EPB	
2.2 TDCi	129	03/08 →				FCP1917	LUCAS/TRW	Without EPB	
2.3	118	07/07 →				FCP1917	LUCAS/TRW	Without EPB	
2.5	162	03/07 →				FCP1917	LUCAS/TRW	Without EPB	
Mustang									
4.0 V6	157	12/04 →	FRP3129						
4.0 V6	157	12/04 →				FRP3130	LUCAS/TRW		
5.0		01/11 → 12/11	FRP3129						
5.0		01/11 → 12/11				FRP3130	LUCAS/TRW		
5.0L Performance		01/11 → 12/11				FRP3130	LUCAS/TRW		
Bullit 4.6		01/08 → 12/09	FRP3129						
Bullit 4.6		01/08 → 12/09				FRP3130	LUCAS/TRW		
GT 4.6		01/05 → 12/10	FRP3129						
GT 4.6		01/05 → 12/10				FRP3130	LUCAS/TRW		
GT Performance Pack 5.0L Ti-VCT V8	324	01/15 →	FCP4711	BREMBO	Performance pack for 15inch(380mm) discs				
GT350 Hummingbird		01/16 →	FCP4835	BREMBO					
Shelby GT 4.6		01/07 → 12/08	FRP3129						
Shelby GT 4.6		01/07 → 12/08				FRP3130	LUCAS/TRW		
Shelby GT500		01/07 → 12/14	FCP1334	BREMBO					
Shelby GT500		01/07 → 12/14				FRP3130	LUCAS/TRW		
V6 3.7		01/11 →	FRP3129						
V6 3.7		01/11 →				FRP3130	LUCAS/TRW		

For material availability see page 16-18 / Per la disponibilità materiali vedere a pagina 16-18

...FORD

	kW				NOTE			NOTE
Mustang Coupe								
5.2 V8 Shelby GT350	392	11/15 →	**FCP4835**	BREMBO				
5.2 V8 Shelby GT350	392	11/15 →				**FRP3137**	BREMBO	
Orion								
1.3	44	02/86 → 10/90	**FCP206**	ATE				
1.3	44	10/90 → 12/92	**FCP617**	BENDIX				
1.3	44	01/93 → 12/94	**FCP617**	BENDIX				
1.3	51	09/83 → 12/85	**FCP206**	ATE				
1.4	55	02/86 → 10/90	**FCP206**	ATE				
1.4 Auto/Manual	51	10/90 → 12/94	**FCP617**	BENDIX				
1.4 Auto/Manual	52	10/90 → 12/94	**FCP617**	BENDIX				
1.4 Auto/Manual	54	10/90 → 12/94	**FCP617**	BENDIX				
1.6	59	09/83 → 10/90	**FCP206**	ATE				
1.6	65	09/83 → 10/90	**FCP206**	ATE				
1.6	66	09/83 → 10/90	**FCP206**	ATE				
1.6 Auto/Manual	66, 77	10/90 → 12/94	**FCP617**	BENDIX				
1.6 D	40	09/83 → 10/90	**FCP206**	ATE				
1.6 D	40	01/86 → 10/90	**FCP206**	ATE				
1.6 D Ghia	40	10/83 → 01/86	**FCP206**	ATE				
1.6 Ghia	59, 77	10/83 → 10/90	**FCP206**	ATE				
1.6 Ghia	66, 77	02/86 → 10/90	**FCP206**	ATE				
1.8	44	09/88 → 10/90	**FCP206**	ATE				
1.8 D	44, 55	10/90 → 12/94	**FCP617**	BENDIX				
1.8 i 16V	77	10/90 → 12/94	**FCP617**	BENDIX				
1.8 i Ghia Si 16V	96	10/90 → 12/94	**FCP276**	ATE				
1.8 i Ghia Si 16V	96	10/90 → 12/94	**FCP617**	BENDIX				
P100								
1.8 TD	55	05/89 → 12/94	**FCP206**	ATE				
2.0	74	01/88 → 12/94	**FCP206**	ATE				
Puma								
1.4 16V	66	07/97 → 02/00	**FCP1081**	ATE				
1.4 i 16V	66	03/00 → 10/00	**FCP1394**	ATE				
1.6 i 16V	76	08/00 →	**FCP1394**	ATE				
1.7 16V	92	07/97 → 02/00	**FCP1081**	ATE				
1.7 i 16V	92	03/00 →	**FCP1394**	ATE				
S-MAX (WA6)								
1.8 TDCi	92	05/06 →				**FCP1917**	LUCAS/TRW	Without EPB
2.0	107	05/06 →				**FCP1917**	LUCAS/TRW	Without EPB
2.0 TDCi	103	05/06 →				**FCP1917**	LUCAS/TRW	Without EPB
2.0 TDCi	85	11/07 →				**FCP1917**	LUCAS/TRW	Without EPB
2.0 TDCi	96	05/06 →				**FCP1917**	LUCAS/TRW	Without EPB
2.2 TDCi	129	03/08 →				**FCP1917**	LUCAS/TRW	Without EPB
2.3	118	07/07 →				**FCP1917**	LUCAS/TRW	Without EPB
2.5 ST	162	05/06 →				**FCP1917**	LUCAS/TRW	Without EPB
Scorpio								
1.8 CL,GL	66	01/85 → 12/92	**FCP276**	ATE				
1.8 CL,GL	66	01/85 → 12/92				**FCP408**	LUCAS/TRW	
2.0	85	10/94 → 08/97	**FCP766**	ATE				
2.0	85	10/94 → 08/97				**FCP408**	LUCAS/TRW	
2.0 CL, GL	77	12/86 → 12/92	**FCP276**	ATE				
2.0 CL,GL, Ghia, Clipper	77	01/85 → 12/92	**FCP276**	ATE				
2.0 CL,GL, Ghia, Clipper	77	01/85 → 12/92				**FCP408**	LUCAS/TRW	
2.0 Ghia, Clipper	77	12/86 → 12/92	**FCP276**	ATE				
2.0 Ghia, Clipper	77	12/86 → 12/92				**FCP408**	LUCAS/TRW	
2.3 16V	107	10/94 → 08/98	**FCP766**	ATE				
2.3 16V	107	10/94 → 08/98				**FCP408**	LUCAS/TRW	
2.4	92, 96	01/85 → 12/94	**FCP276**	ATE				
2.4	92, 96	01/85 → 12/94				**FCP408**	LUCAS/TRW	
2.4 i	92, 96	01/87 → 12/94	**FCP276**	ATE				
2.4 i	92, 96	01/87 → 12/94				**FCP408**	LUCAS/TRW	
2.5 D, TD Ghia,Clipper		01/85 → 12/92	**FCP276**	ATE				
2.5 D, TD Ghia,Clipper		01/85 → 12/92				**FCP408**	LUCAS/TRW	
2.5 TD	85	10/94 → 06/96	**FCP766**	ATE				
2.5 TD	85	10/94 → 06/96				**FCP408**	LUCAS/TRW	
2.8 GL, Ghia	110	01/85 → 12/92	**FCP276**	ATE				
2.8 GL, Ghia	110	01/85 → 12/92				**FCP408**	LUCAS/TRW	
2.9	107, 110	01/85 → 06/96	**FCP276**	ATE				
2.9	107, 110	01/85 → 06/96				**FCP408**	LUCAS/TRW	
2.9 24V	152	10/94 → 08/98				**FCP408**	LUCAS/TRW	
2.9 i	107, 110	01/87 → 09/94	**FCP276**	ATE				
2.9 i	107, 110	01/87 → 09/94				**FCP408**	LUCAS/TRW	

For material availability see page 16-18 / Per la disponibilità materiali vedere a pagina 16-18

...FORD

Sierra

	kW				NOTE			NOTE
1.3		01/86 → 12/92	FCP276	ATE				
1.3		01/86 → 12/92				FCP408	LUCAS/TRW	
1.3	44	10/82 → 10/86	FCP206	ATE				
1.6	51, 55	10/82 → 02/87	FCP206	ATE				
1.6	53	03/87 → 02/93	FCP206	ATE				
1.6	53	03/87 → 02/93	FCP276	ATE	ABS			
1.6	53	03/87 → 02/93				FCP408	LUCAS/TRW	ABS
1.6	55	03/87 → 02/93	FCP206	ATE				
1.6	55	03/87 → 02/93	FCP276	ATE	ABS			
1.6	55	03/87 → 02/93				FCP408	LUCAS/TRW	ABS
1.6	59	03/87 → 02/93	FCP206	ATE				
1.6	59	03/87 → 02/93	FCP276	ATE	ABS			
1.6	59	03/87 → 02/93				FCP408	LUCAS/TRW	ABS
1.6 SW Estate	51	01/82 → 12/92	FCP206	ATE				
1.6 SW Estate	51	01/82 → 12/92	FCP276	ATE	ABS			
1.6 SW Estate	51	01/82 → 12/92				FCP408	LUCAS/TRW	ABS
1.6 SW Estate	55	01/82 → 12/92	FCP206	ATE				
1.6 SW Estate	55	01/82 → 12/92	FCP276	ATE	ABS			
1.6 SW Estate	55	01/82 → 12/92				FCP408	LUCAS/TRW	ABS
1.6 SW Estate	59	01/82 → 12/92	FCP206	ATE				
1.6 SW Estate	59	01/82 → 12/92	FCP276	ATE	ABS			
1.6 SW Estate	59	01/82 → 12/92				FCP408	LUCAS/TRW	ABS
1.8	64, 66	02/87 → 02/93	FCP206	ATE				
1.8	64, 66	02/87 → 02/93	FCP276	ATE	ABS			
1.8	64, 66	02/87 → 02/93				FCP408	LUCAS/TRW	ABS
1.8	66	10/84 → 02/87	FCP206	ATE				
1.8 SW Estate	64, 66	01/82 → 12/86	FCP276	ATE	ABS			
1.8 SW Estate	64, 66	01/82 → 12/86				FCP408	LUCAS/TRW	ABS
1.8 SW Estate	64, 66	01/87 → 02/93	FCP206	ATE				
1.8 SW Estate	64, 66	01/87 → 02/93				FCP408	LUCAS/TRW	ABS
1.8 TD		01/90 → 12/92	FCP206	ATE				
2.0	77	10/82 → 02/87	FCP206	ATE				
2.0	77	10/82 → 02/87	FCP276	ATE	ABS			
2.0	77	03/87 → 02/93	FCP206	ATE				
2.0	77	03/87 → 02/93	FCP276	ATE	ABS			
2.0	77	03/87 → 02/93				FCP408	LUCAS/TRW	ABS
2.0 i XR4, 4x4		02/90 → 02/93	FCP276	ATE				
2.0 i XR4, 4x4		02/90 → 02/93				FCP408	LUCAS/TRW	
2.0 i XR4i		12/82 → 03/88	FCP276	ATE				
2.0 SW Estate		01/82 → 12/86	FCP206	ATE				
2.0 SW Estate		01/82 → 12/86	FCP276	ATE	ABS			
2.0 SW Estate		01/82 → 12/86				FCP408	LUCAS/TRW	ABS
2.0 SW Estate		01/87 → 02/93	FCP206	ATE				
2.0 SW Estate		01/87 → 02/93	FCP276	ATE	ABS			
2.0 SW Estate		01/87 → 02/93				FCP408	LUCAS/TRW	ABS
2.3 D	49	10/82 → 02/87	FCP206	ATE				
2.3 D	49	02/87 → 02/90	FCP206	ATE				
2.3 D	49	02/87 → 02/90	FCP276	ATE	ABS			
2.3 D	49	02/87 → 02/90				FCP408	LUCAS/TRW	ABS
2.3 D SW Estate	49	01/82 → 12/90	FCP206	ATE				
2.3 D SW Estate	49	01/82 → 12/90	FCP276	ATE	ABS			
2.3 D SW Estate	49	01/82 → 12/90				FCP408	LUCAS/TRW	ABS
2.3 D SW Estate	49	01/91 → 02/93	FCP206	ATE				
2.3 D SW Estate	49	01/91 → 02/93	FCP276	ATE	ABS			
2.3 D SW Estate	49	01/91 → 02/93				FCP408	LUCAS/TRW	ABS
2.3 SW Estate	84	01/82 → 12/87	FCP206	ATE				
2.3 SW Estate	84	01/82 → 12/87	FCP276	ATE	ABS			
2.3 SW Estate	84	01/82 → 12/87				FCP408	LUCAS/TRW	ABS
2.3 SW Estate	84	01/87 → 02/93	FCP206	ATE				
2.3 SW Estate	84	01/87 → 02/93	FCP276	ATE	ABS			
2.3 SW Estate	84	01/87 → 02/93				FCP408	LUCAS/TRW	ABS
2.8 4x4	110	06/85 → 01/93	FCP276	ATE				
2.8 4x4	110	06/85 → 01/93				FCP408	LUCAS/TRW	
2.8 4x4 SW Estate	110	01/82 → 02/93	FCP276	ATE				
2.8 4x4 SW Estate	110	01/82 → 02/93				FCP408	LUCAS/TRW	
2.8 XR4i		01/83 → 12/85	FCP276	ATE				
2.9	107, 110	05/89 → 12/95	FCP276	ATE				
2.9	107, 110	05/89 → 12/95				FCP408	LUCAS/TRW	
2.9 V6 4x4 SW Estate	110	01/82 → 02/93	FCP276	ATE				
2.9 V6 4x4 SW Estate	110	01/82 → 02/93				FCP408	LUCAS/TRW	

Sierra Cosworth

2.0 4x4 16V	162	01/89 → 02/93	FCP685	ATE				
2.0 4x4 16V	162	01/89 → 02/93				FCP408	LUCAS/TRW	
2.0 RS 16V	150, 162	07/86 → 02/93	FCP399	LUCAS/TRW				
2.0 RS 16V	150, 162	07/86 → 02/93				FCP408	LUCAS/TRW	

For material availability see page 16-18 / Per la disponibilità materiali vedere a pagina 16-18



kW





...FORD

					NOTE			NOTE
Sierra Sapphire								
1.6	55, 59	03/87 → 02/95	**FCP206**	ATE				
1.6	55, 59	03/87 → 02/95	**FCP276**	ATE	ABS			
1.6	55, 59	03/87 → 02/95				**FCP408**	LUCAS/TRW	ABS
1.8	64, 66	03/87 → 02/95	**FCP206**	ATE				
1.8	64, 66	03/87 → 02/95	**FCP276**	ATE	ABS			
1.8	64, 66	03/87 → 02/95				**FCP408**	LUCAS/TRW	ABS
2.0	77	03/87 → 02/93	**FCP206**	ATE				
2.0	77	03/87 → 02/93	**FCP276**	ATE	ABS			
2.0	77	03/87 → 02/93				**FCP408**	LUCAS/TRW	ABS
2.0	85	03/87 → 02/93	**FCP206**	ATE				
2.0	85	03/87 → 02/93	**FCP276**	ATE	ABS			
2.0	85	03/87 → 02/93				**FCP408**	LUCAS/TRW	ABS
2.0	92	03/87 → 02/93	**FCP206**	ATE				
2.0	92	03/87 → 02/93	**FCP276**	ATE	ABS			
2.0	92	03/87 → 02/93				**FCP408**	LUCAS/TRW	ABS
2.0 RS Cosworth 2WD		02/88 → 02/93	**FCP399**	LUCAS/TRW				
2.0 RS Cosworth 2WD		02/88 → 02/93				**FCP408**	LUCAS/TRW	
2.0 RS Cosworth 4x4		02/88 → 02/93	**FCP685**	ATE				
2.0 RS Cosworth 4x4		02/88 → 02/93				**FCP408**	LUCAS/TRW	
2.3 D	49	01/87 → 12/90	**FCP206**	ATE				
2.3 D	49	01/87 → 12/90	**FCP276**	ATE	ABS			
2.3 D	49	01/87 → 12/90				**FCP408**	LUCAS/TRW	
2.3 D	49	01/91 → 02/93	**FCP206**	ATE				
2.3 D	49	01/91 → 02/93	**FCP276**	ATE	ABS			
2.3 D	49	01/91 → 02/93				**FCP408**	LUCAS/TRW	
Street Ka								
1.6 i	70	02/03 →	**FCP1394**	ATE				
Taunus								
1.3	41, 44	01/70 → 12/92	**FCP167**	LUCAS/TRW				
1.3 i		01/79 → 12/82	**FCP167**	LUCAS/TRW				
1.3 i		01/83 → 12/92	**FCP167**	LUCAS/TRW				
1.3 i	41, 44	01/74 → 12/79	**FCP167**	LUCAS/TRW				
1.6	53, 66	01/70 → 12/92	**FCP167**	LUCAS/TRW				
1.6 i	53, 66	01/75 → 12/79	**FCP167**	LUCAS/TRW				
1.6 i	53, 66	01/80 → 12/82	**FCP167**	LUCAS/TRW				
1.6 i	53, 66	01/83 → 12/92	**FCP167**	LUCAS/TRW				
2.0 Sedan/SW Estate	66	01/76 → 12/82	**FCP167**	LUCAS/TRW				
2.3	79	07/79 → 07/82	**FCP167**	LUCAS/TRW				

FORD USA

Focus I								
		01/98 → 12/01	**FCP1318**	KELGATE				

Formula Renault

2.0								
		01/13 → 12/13	**FRP3092**	PFC				
		01/13 → 12/13				**FRP3092**	PFC	

FSO

125P								
1.3 1300	47	10/67 → 08/92				**FCP22**	BENDIX	
1.3 1300	47	01/76 → 06/90	**FCP29**	BENDIX				
1.5 1500	55	10/67 → 08/92				**FCP22**	BENDIX	
125P Estate								
1.3	47	10/67 → 08/92				**FCP22**	BENDIX	
1.5	55	10/67 → 08/92				**FCP22**	BENDIX	
132P								
1.6	72	01/74 → 09/78				**FCP22**	BENDIX	
1.8	79	07/75 → 09/78				**FCP22**	BENDIX	

For material availability see page 16-18 / Per la disponibilità materiali vedere a pagina 16-18

FERODO RACING
Updated on November 2020

	kW				NOTE			NOTE
...FSO								
Polonez								
1.6		11/78 →	**FCP29**	BENDIX				
POLONEZ I								
1.3	48	01/78 → 12/80				**FCP22**	BENDIX	
1.5	55	10/77 → 08/88				**FCP22**	BENDIX	
1.5	55	11/78 →	**FCP29**	BENDIX				
1.5	60	01/78 → 08/88				**FCP22**	BENDIX	
1.5 Turbo	70	01/78 → 12/91				**FCP22**	BENDIX	
1.6	64	08/86 → 08/88				**FCP22**	BENDIX	
POLONEZ II								
1.5	55	08/88 → 08/92				**FCP22**	BENDIX	
1.5 i	55	08/88 → 08/92				**FCP22**	BENDIX	
1.6	64	08/88 → 08/92				**FCP22**	BENDIX	
1.9 D	51	08/88 → 08/92				**FCP22**	BENDIX	
POLONEZ III								
1.4 i 16V	76	09/92 → 03/02				**FCP22**	BENDIX	
1.6 i	57	09/92 → 03/02				**FCP22**	BENDIX	
1.9 D	51	09/92 → 03/02				**FCP22**	BENDIX	
POLONEZ III Saloon								
1.6 i	57	09/92 → 03/02				**FCP22**	BENDIX	
Prima								
1.5	55	09/88 → 09/95	**FCP29**	BENDIX				
1.6	60	09/94 →	**FCP29**	BENDIX				
1.9	51	09/91 →	**FCP29**	BENDIX				
GEO								
Prism								
		01/89 → 12/92	**FCP308**	KELGATE				
GINETTA								
G 40								
2.0	168	01/98 →	**FCP399**	ATE				
2.0	168	01/98 →				**FCP408**		
G 40R								
2.0		12/10 →	**FCP399**	ATE				
2.0		12/10 →				**FCP399**	ATE	
G4								
		01/61 → 12/69	**FCP809**	LUCAS/TRW				
G55								
GT4		01/16 →	**FRP3015**					
GT4		12/16 →				**FRP1077**		
GLAS								
04 all models								
		01/63 → 12/69	**FCP3**	ATE				
		01/63 → 12/69				**FCP3**	ATE	
2600 GT/3000 GT								
		01/65 → 12/69	**FCP11**	ATE				
		01/65 → 12/69				**FCP3**	ATE	

For material availability see page 16-18 / Per la disponibilità materiali vedere a pagina 16-18

	kW				NOTE			NOTE
HOLDEN								
COMBO Box (XC)								
1.6 i	62	09/02 → 04/05	**FCP1640**	ATE				
Commodore								
VX,VU,VY,VZ		01/00 →	**FCP1553**	KELGATE				
HONDA								
Accord								
1.8 i CE7		02/96 → 10/98	**FCP905**	AKEBONO				
1.8 i CE7		02/96 → 10/98				**FCP956**	NISSIN	
2.0 CB 16V	66	09/89 → 12/93	**FCP761**	AKEBONO				
2.0 CB 16V	66	09/89 → 12/93				**FCP956**	NISSIN	
2.0 CB 16V	81	09/89 → 12/93	**FCP761**	AKEBONO				
2.0 CB 16V	81	09/89 → 12/93				**FCP956**	NISSIN	
2.0 CB 16V	98	09/89 → 12/93	**FCP761**	AKEBONO				
2.0 CB 16V	98	09/89 → 12/93				**FCP956**	NISSIN	
2.2 16V		09/89 → 12/91	**FCP598**	AKEBONO				
2.2 16V		09/89 → 12/91				**FCP472**	AKEBONO	
2.2 4 wheel drive 16V		01/91 →	**FCP598**	AKEBONO				
2.2 4 wheel drive 16V		01/91 →				**FCP956**	NISSIN	
2.2 i CE9 VTEC 16V	110	02/96 → 10/98	**FCP905**	AKEBONO				
2.2 i CE9 VTEC 16V	110	02/96 → 10/98				**FCP956**	NISSIN	
2.3 16V		05/93 → 02/96	**FCP905**	AKEBONO	15" wheel			
2.3 16V		05/93 → 02/96				**FCP956**	NISSIN	
2.3 16V		05/96 →	**FCP761**	AKEBONO	14" wheel			
2.3 16V		05/96 →				**FCP956**	NISSIN	
2.3 i CC7 16V	116	01/93 → 02/96	**FCP905**	AKEBONO				
2.3 i CC7 16V	116	01/93 → 02/96				**FCP956**	NISSIN	
Accord Aerodeck								
2.0 CC 16V	98	01/91 → 12/92	**FCP905**	AKEBONO	15" wheel			
2.0 CC 16V	98	01/91 → 12/92				**FCP956**	NISSIN	
2.0 CC 16V	98	01/92 → 12/94				**FCP956**	NISSIN	
2.0 CC 16V	98	01/95 →	**FCP761**	AKEBONO	14" wheel			
2.0 CC 16V	98	01/95 →				**FCP956**	NISSIN	
2.0 i CE2/CE1 16V	136	01/94 → 12/97	**FCP905**	AKEBONO				
2.0 i CE2/CE1 16V	136	01/94 → 12/97				**FCP956**	NISSIN	
2.2 CC 16V	108, 110	01/91 → 12/92	**FCP905**	AKEBONO	15" wheel			
2.2 CC 16V	108, 110	01/91 → 12/92				**FCP956**	NISSIN	
2.2 CC 16V	108, 110	01/92 → 12/94				**FCP956**	NISSIN	
2.2 CC 16V	108, 110	01/95 →	**FCP761**	AKEBONO	14" wheel			
2.2 CC 16V	108, 110	01/95 →				**FCP956**	NISSIN	
2.2 i CE2/CE1 16V	150	01/94 → 12/97	**FCP905**	AKEBONO				
2.2 i CE2/CE1 16V	150	01/94 → 12/97				**FCP956**	NISSIN	
2.2 i CB8/9 16V		01/91 → 12/94	**FCP905**	AKEBONO				
Accord Coupe								
2.0 16V	98	01/92 → 12/94				**FCP956**	NISSIN	
2.0 16V	98	01/95 →	**FCP761**	AKEBONO				
2.0 16V	98	01/95 →				**FCP956**	NISSIN	
2.0 i CG4 16V	147	02/98 → 12/02	**FCP905**	AKEBONO				
2.0 i CG4 16V	147	02/98 → 12/02				**FCP956**	NISSIN	
2.2	110	01/98 →	**FCP761**	AKEBONO				
3.0 i CG2 V6	200	02/98 → 12/02	**FCP905**	AKEBONO				
3.0 i CG2 V6	200	02/98 → 12/02				**FCP956**	NISSIN	
ACCORD III (CA)								
2.0 EX (CA5)	75	11/85 → 12/89	**FCP748**	AKEBONO				
2.0 EX (CA5)	75	11/85 → 12/89				**FCP472**	AKEBONO	
2.0 EX (CA5)	76	11/85 → 12/89	**FCP748**	AKEBONO				
2.0 EX (CA5)	76	11/85 → 12/89				**FCP472**	AKEBONO	
2.0 EX (CA5)	78	11/85 → 05/89	**FCP748**	AKEBONO				
2.0 EX (CA5)	78	11/85 → 05/89				**FCP472**	AKEBONO	
2.0 EXi (CA5)	85	01/86 → 12/89	**FCP748**	AKEBONO				
2.0 EXi (CA5)	85	01/86 → 12/89				**FCP472**	AKEBONO	
2.0 i 16V (CA5)	101	01/87 → 12/87	**FCP748**	AKEBONO				
2.0 i 16V (CA5)	101	01/87 → 12/87				**FCP472**	AKEBONO	
ACCORD III Aerodeck (CA)								
2.0	101	01/86 → 12/86	**FCP748**	AKEBONO				
2.0	101	01/86 → 12/86				**FCP472**	AKEBONO	
2.0 EX	75	10/87 → 12/89				**FCP472**	AKEBONO	
2.0 EX (CA5)	76	10/87 → 12/89	**FCP748**	AKEBONO				
2.0 EX (CA5)	76	10/87 → 12/89				**FCP472**	AKEBONO	

For material availability see page 16-18 / Per la disponibilità materiali vedere a pagina 16-18

FERODO RACING
Updated on November 2020

...HONDA	kW				NOTE			NOTE
...ACCORD III Aerodeck (CA)								
2.0 EX (CA5)	78	11/85 → 05/89	**FCP748**	AKEBONO				
2.0 EX (CA5)	78	11/85 → 05/89				**FCP472**	AKEBONO	
2.0 EXi (CA5)	85	10/87 → 12/89				**FCP472**	AKEBONO	
ACCORD V (CC, CD)								
2.0 i	85	03/93 → 01/96	**FCP905**	AKEBONO	15" wheel			
2.0 i	85	03/93 → 01/96				**FCP956**	NISSIN	
2.0 i S	96	03/93 → 01/96	**FCP905**	AKEBONO	15" wheel			
2.0 i S	96	03/93 → 01/96				**FCP956**	NISSIN	
2.3 i SR	116	03/93 → 01/96	**FCP905**	AKEBONO	15" wheel			
2.3 i SR	116	03/93 → 01/96				**FCP956**	NISSIN	
ACCORD V (CE, CF_)								
2.0 i LS (CE8)	96	02/96 → 10/98	**FCP905**	AKEBONO	15" wheel			
2.0 i LS (CE8)	96	02/96 → 10/98				**FCP956**	NISSIN	
Accord VI								
2.2 Type R	156	01/99 → 12/02	**FCP905**	AKEBONO				
2.2 Type R	156	01/99 → 12/02				**FCP541**	LUCAS/TRW	
CITY Saloon (GM)								
1.4 i-V TEC	73	09/08 →	**FCP4404**	AKEBONO				
Civic								
1.2	77	01/73 → 12/75	**FCP39**	SUMITOMO				
1.4 i EJ9 16V	66	01/98 → 02/01	**FCP776**	AKEBONO				
1.5 i 16V	84	10/95 → 02/01	**FCP776**	AKEBONO				
1.5 i 16V	84	10/95 → 02/01				**FCP472**	AKEBONO	
1.6 ED4-ED7 16V	81, 96	01/87 → 10/91	**FCP598**	AKEBONO				
1.6 ED4-ED7 16V	81, 96	01/87 → 10/91				**FCP472**	AKEBONO	
1.6 EE9 16V	81, 96	01/90 → 10/91	**FCP613**	AKEBONO				
1.6 EE9 16V	81, 96	01/90 → 10/91				**FCP472**	AKEBONO	
1.6 EK1, EK4 Vti 16V		10/95 → 02/01	**FCP776**	AKEBONO				
1.6 EK1, EK4 Vti 16V		10/95 → 02/01				**FCP472**	AKEBONO	
1.6 i 16V	83	09/94 → 01/97	**FCP613**	LUCAS/TRW				
1.6 i MB1 VTEC 16V	93	01/95 → 12/97	**FCP613**	LUCAS/TRW				
1.6 i MB1 VTEC 16V	93	01/95 → 12/97				**FCP472**	AKEBONO	
1.8 MB6 16V	124	01/97 → 02/01	**FCP905**	AKEBONO				
1.8 MB6 16V	124	01/97 → 02/01				**FCP472**	AKEBONO	
2.0 TDi MB7	63	01/97 → 02/01	**FCP613**	LUCAS/TRW				
2.0 TDi MB7	63	01/97 → 02/01				**FCP472**	AKEBONO	
Si with ABS		01/94 → 12/95	**FCP1436**	AKEBONO				
Civic Aerodeck								
1.6 16V	85	02/98 → 02/01	**FCP613**	LUCAS/TRW				
1.6 16V	85	02/98 → 02/01				**FCP472**	AKEBONO	
1.8 16V	124	02/98 → 02/01	**FCP613**	LUCAS/TRW				
1.8 16V	124	02/98 → 02/01				**FCP472**	AKEBONO	
Civic Coupe								
1.5 i EJ2 16V	69, 74	01/94 → 11/95	**FCP777**	AKEBONO				
1.5 i EJ2 16V	69, 74	01/94 → 11/95	**FCP777**	AKEBONO				
1.6 i EJ1 16V	92	01/94 → 11/95	**FCP776**	AKEBONO				
1.6 i EJ6 16V		03/96 → 03/00	**FCP777**	AKEBONO				
1.6 i EJ8 VTEC 16V		03/96 → 03/00	**FCP776**	AKEBONO				
1.6 i EJ1 16V	92	01/94 → 11/95	**FCP776**	AKEBONO				
1.6 i VTEC VTi 16V		01/92 →	**FCP776**	AKEBONO				
1.6 i VTEC VTi 16V		01/92 →				**FCP472**	AKEBONO	
Civic CRX								
1.6 EE VTEC 16V	110	01/89 → 12/91	**FCP613**	AKEBONO				
1.6 i EG VTEC Vti 16V	92, 118	01/92 → 12/93	**FCP776**	AKEBONO				
1.6 i EH VTEC Esi 16V	92, 118	01/92 → 12/93	**FCP777**	AKEBONO				
Civic I								
1.5 i	52	01/76 → 12/77	**FCP39**	SUMITOMO				
Civic IV								
1.3 EG 16V	55	11/91 → 12/95	**FCP776**	AKEBONO				
1.4 16V		11/91 → 12/94	**FCP776**	AKEBONO				
1.4 16V		11/91 → 12/94				**FCP472**	AKEBONO	
1.4 16V		11/91 → 12/94	**FCP777**	AKEBONO				
1.4 i EJ9 16V	66	01/96 → 01/98	**FCP777**	AKEBONO				
1.4 i MA8 16V		09/94 → 01/97	**FCP613**	LUCAS/TRW				
1.4 i MB2 16V		01/97 → 12/98	**FCP613**	LUCAS/TRW				

For material availability see page 16-18 / Per la disponibilità materiali vedere a pagina 16-18

...HONDA	kW				NOTE			NOTE
...Civic IV								
1.4 MA 16V	55, 66	01/94 → 12/96	**FCP613**	LUCAS/TRW				
1.5 16V	61	11/91 → 12/92	**FCP776**	AKEBONO				
1.5 16V	61	11/91 → 12/92	**FCP777**	AKEBONO				
1.5 16V	61	11/91 → 12/92				**FCP472**	AKEBONO	
1.5 16V	66	11/91 → 12/95	**FCP776**	AKEBONO				
1.5 16V	66	11/91 → 12/95	**FCP777**	AKEBONO				
1.5 16V	66	11/91 → 12/95				**FCP472**	AKEBONO	
1.5 i 16V	66	12/94 → 12/95	**FCP777**	AKEBONO				
1.5 i EG4 16V		01/92 → 12/95	**FCP777**	AKEBONO				
1.5 i MA9 VTEC-E 16V		09/94 → 01/97	**FCP613**	LUCAS/TRW				
Civic Shuttle								
1.5 EE1/2 16V	66	01/88 → 12/91	**FCP598**	AKEBONO				
1.6 EE 16V	80, 81	04/88 → 12/92	**FCP598**	AKEBONO				
Civic V								
1.3 i EG 16V	55	01/94 → 02/01	**FCP776**	AKEBONO				
1.4 i MB2 16V		01/99 → 02/01	**FCP613**	LUCAS/TRW				
1.5 16V	84	01/96 →	**FCP777**	AKEBONO				
1.5 i 16V	66	12/94 → 12/95	**FCP776**	AKEBONO				
1.5 i 16V	66	12/94 → 12/95				**FCP472**	AKEBONO	
1.5 i 16V	84	10/95 → 02/01	**FCP777**	AKEBONO				
1.5 i EK3 16V		11/95 → 02/01	**FCP776**	AKEBONO				
1.5 i MB3 16V		01/97 → 02/01	**FCP613**	LUCAS/TRW				
CIVIC V Coupe (EJ)								
1.6 i Vtec	118	01/94 → 11/95	**FCP776**	AKEBONO				
1.6 i Vtec	118	01/94 → 11/95				**FCP472**	AKEBONO	
1.6 i Vtec (EJ1)	92	01/94 → 03/96	**FCP776**	AKEBONO				
1.6 i Vtec (EJ1)	92	01/94 → 03/96				**FCP472**	AKEBONO	
Civic V Fastback								
1.8 VTi		01/97 →	**FCP905**	AKEBONO				
CIVIC V Hatchback (EG)								
1.6 16V Vtec (EG5)	92	10/91 → 11/95	**FCP776**	AKEBONO				
1.6 16V Vtec (EG5)	92	10/91 → 11/95	**FCP777**	AKEBONO				
1.6 16V Vtec (EG5)	92	10/91 → 11/95				**FCP472**	AKEBONO	
CIVIC V Saloon (EG, EH)								
1.6 16V Vtec (EH9)	92	10/91 → 11/95	**FCP776**	AKEBONO				
1.6 16V Vtec (EH9)	92	10/91 → 11/95	**FCP777**	AKEBONO				
1.6 16V Vtec (EH9)	92	10/91 → 11/95				**FCP472**	AKEBONO	
Civic VII								
1.7 CTDi	74	01/02 → 09/05	**FCP1444**	SUMITOMO				
1.7 CTDi	74	01/02 → 09/05				**FCP956**	NISSIN	
2.0 i Sport	118	01/04 → 09/05	**FCP1444**	SUMITOMO				
2.0 i Sport	118	01/04 → 09/05				**FCP956**	NISSIN	
2.0 Type R	147	09/01 → 09/05	**FCP1444**	SUMITOMO				
2.0 Type R	147	09/01 → 09/05				**FCP956**	NISSIN	
Civic VIII								
1.4	61	01/06 →	**FCP1859**	SUMITOMO				
1.4	61	01/06 →				**FCP1862**	LUCAS/TRW	
1.8	103	01/06 →	**FCP1859**	SUMITOMO				
1.8	103	01/06 →				**FCP1862**	LUCAS/TRW	
2.0	114	01/06 →	**FCP1859**	SUMITOMO				
2.0	114	01/06 →				**FCP1862**	LUCAS/TRW	
2.0 Type R	148	09/06 →	**FCP1444**	SUMITOMO				
2.0 Type R	148	09/06 →				**FCP1862**	LUCAS/TRW	
2.0 Type R	148	01/07 →	**FRP3105**		Gravel Rally R3			
2.0 Type R	148	01/07 →				**FCP1862**	LUCAS/TRW	
2.2 CTDi	103	01/06 →	**FCP1859**	SUMITOMO				
2.2 CTDi	103	01/06 →				**FCP1862**	LUCAS/TRW	
CIVIC X Hatchback (FC_,FK)								
1.0 VTEC (FK6)	95	02/17 →				**FCP5086**	BREMBO	
1.5 VTEC (FK7)	134	02/17 →				**FCP5086**	BREMBO	
1.6 i-DTEC (FK9)	88	01/18 →				**FCP5086**	BREMBO	

For material availability see page 16-18 / Per la disponibilità materiali vedere a pagina 16-18

FERODO RACING
Updated on November 2020

...HONDA	kW					NOTE			NOTE
CIVIC X Saloon (FC_)									
1.5 VTEC	134	02/17 →					FCP5086	BREMBO	
CIVIC-IX (FK)									
1.4 i-VTEC	73	01/12 →					FCP1862	LUCAS/TRW	
1.8 i-VTEC	104	01/12 →					FCP1862	LUCAS/TRW	
2.0 i-VTEC Type R (FK2)	228	08/15 →	FRP3067	BREMBO					
2.0 i-VTEC Type R (FK2)	228	08/15 →					FCP1676	TEVES	
CIVIC-X Hatchback (FC_,FK)									
2.0 Type-R (FK8)	235	06/17 →	FRP3067	BREMBO					
2.0 Type-R (FK8)	235	06/17 →					FCP5086	BREMBO	
Concerto									
1.4 16V	61	10/89 → 08/91	FCP613	LUCAS/TRW	ABS				
1.4 16V	61	10/89 → 08/91					FCP472	AKEBONO	
1.5 16V	66	10/91 → 05/95	FCP613	LUCAS/TRW	ABS				
1.5 16V	66	10/91 → 05/95					FCP472	AKEBONO	
1.6 16V	82, 90	10/89 → 10/92	FCP613	LUCAS/TRW					
1.6 16V	82, 90	10/89 → 10/92					FCP472	AKEBONO	
Coupe									
1.6 16V		02/88 → 12/91	FCP598	AKEBONO					
1.6 i VTEC ESi 16V	92	01/92 →	FCP776	AKEBONO					
1.6 i VTEC VTi 16V	92	01/92 →	FCP776	AKEBONO					
1.6 VTEC 16V		01/90 → 12/91	FCP748	AKEBONO					
CR-V									
2.0 i RD1 16V	94	06/97 → 12/98	FCP905	AKEBONO					
2.0 i RD1 16V	94	01/99 →	FCP1436	AKEBONO					
CR-Z (ZF1)									
1.5 Hybrid	84	06/10 →	FCP4404	AKEBONO					
1.5 Hybrid	84	06/10 →					FCP956	AKEBONO	
1.5 Hybrid	89	11/12 →	FCP4404	AKEBONO					
1.5 Hybrid	89	11/12 →					FCP956	AKEBONO	
1.5 Hybrid	91	09/10 → 12/13	FCP4404	AKEBONO					
1.5 Hybrid	91	09/10 → 12/13					FCP956	AKEBONO	
CRX II (ED, EE)									
1.6 i 16V (ED9)	91	10/87 → 02/92	FCP598	AKEBONO					
1.6 i 16V (ED9)	91	10/87 → 02/92					FCP472	AKEBONO	
1.6 i 16V (ED9)	96	10/87 → 12/89	FCP598	AKEBONO					
1.6 i 16V (ED9)	96	10/87 → 12/89					FCP472	AKEBONO	
1.6 i 16V Vtec (EE8)	110	10/89 → 02/92	FCP598	AKEBONO					
1.6 i 16V Vtec (EE8)	110	10/89 → 02/92					FCP472	AKEBONO	
HR-V									
1.6 16V	77	02/99 →	FCP905	AKEBONO					
INSIGHT (ZE_)									
1.3 Hybrid	65	04/09 →	FCP4404	AKEBONO					
1.3 Hybrid	73	04/09 →	FCP4404	AKEBONO					
Integra (DC2)									
1.8 Type R 16V	140	11/97 →	FCP905	AKEBONO					
1.8 Type R 16V	140	11/97 →					FCP956	NISSIN	
Integra (DC5)									
2.0 16V type-R	162	02/02 →	FCP905	AKEBONO					
2.0 16V type-R	162	02/02 →	FCP1561	BREMBO					
2.0 16V type-R	162	02/02 →					FCP956	AKEBONO	
Integra Coupe'									
1.8 Type-R		11/97 → 01/98	FCP1436	AKEBONO					
Jazz									
1.2 i	57	03/02 →	FCP777	AKEBONO					
1.4 i	61	03/02 →	FCP777	AKEBONO					

For material availability see page 16-18 / Per la disponibilità materiali vedere a pagina 16-18

	kW				NOTE			NOTE
...HONDA								
JAZZ III (GE)								
1.2	66	07/08 →	**FCP4404**	AKEBONO				
1.3 HYBRID	65	04/11 →	**FCP4404**	AKEBONO				
1.3 i	73	07/08 →	**FCP4404**	AKEBONO				
1.4	74	11/08 →	**FCP4404**	AKEBONO				
1.5 Flexfuel	88	07/08 →	**FCP4404**	AKEBONO				
1.5 i	88	07/08 →	**FCP4404**	AKEBONO				
Legend								
2.5 UK Man. 24V	127	10/86 → 04/91	**FCP748**	AKEBONO				
2.7 Jap. Man. 24V	124	01/85 → 12/91	**FCP748**	AKEBONO				
2.7 UK Man. 24V	124	10/86 → 04/91	**FCP748**	AKEBONO				
3.2 UK Man. 24V	151	04/91 → 12/95	**FCP905**	AKEBONO				
3.2 UK Man. 24V	151	04/91 → 12/95				**FCP956**	NISSIN	
3.5 24V	151	01/96 →	**FCP905**	AKEBONO				
Logo								
1.3 i GA3	48	03/99 → 03/02	**FCP777**	AKEBONO				
NSX								
3.0 24V	201	09/90 → 12/96	**FCP905**	AKEBONO				
GT3		01/17 →	**FRP3150**	AP RACING				
GT3		01/17 →				**FRP1078**	BREMBO	
Prelude								
2.0	98	04/92 →	**FCP905**	AKEBONO				
2.0	98	04/92 →				**FCP956**	NISSIN	
2.0 BA	101	11/85 → 07/87				**FCP472**	AKEBONO	
2.0 BA4	80	10/87 → 04/92	**FCP598**	AKEBONO				
2.0 BA4	80	10/87 → 04/92				**FCP472**	AKEBONO	
2.0 BA4 16V	110	10/87 → 12/91	**FCP748**	AKEBONO				
2.0 BA4 16V	110	10/87 → 12/91				**FCP472**	AKEBONO	
2.2 16V	136	01/93 →	**FCP905**	AKEBONO				
2.2 16V	136	01/93 →				**FCP956**	NISSIN	
2.3 BB 16V	118	04/92 →	**FCP905**	AKEBONO				
2.3 BB 16V	118	04/92 →				**FCP956**	NISSIN	
PRELUDE III (BA)								
2.0 (BA4)	84	08/87 → 01/92	**FCP598**	AKEBONO				
2.0 (BA4)	84	08/87 → 01/92				**FCP472**	AKEBONO	
2.0 i EX 16V	101	04/86 → 12/87	**FCP598**	AKEBONO				
2.0 i EX 16V	101	04/86 → 12/87				**FCP472**	AKEBONO	
2.0 i EX 16V (BA2)	101	04/86 → 12/87	**FCP598**	AKEBONO				
2.0 i EX 16V (BA2)	101	04/86 → 12/87				**FCP472**	AKEBONO	
2.0 i EX 16V (BA4)	103	10/87 → 01/92	**FCP598**	AKEBONO				
2.0 i EX 16V (BA4)	103	10/87 → 01/92				**FCP472**	AKEBONO	
2.0 i EX 16V Cat (BA4)	101	04/87 → 01/92	**FCP598**	AKEBONO				
2.0 i EX 16V Cat (BA4)	101	04/87 → 01/92				**FCP472**	AKEBONO	
S2000								
2.0 16V	178	06/99 →	**FCP1444**	SUMITOMO				
2.0 16V	178	06/99 →				**FCP956**	NISSIN	
Shuttle								
2.2 ES 16V	110	01/94 → 12/97	**FCP905**	AKEBONO				
2.2 ES 16V	110	01/94 → 12/97				**FCP956**	NISSIN	
HUMBER								
Sceptre								
		01/63 → 12/67	**FCP823**	LOCKHEED				

For material availability see page 16-18 / Per la disponibilità materiali vedere a pagina 16-18

FERODO RACING
Updated on November 2020







HYUNDAI	kW				NOTE			NOTE
Coupe								
1.6 KG 16V	84	01/96 →	FCP600	AKEBONO				
1.6 KG 16V	84	01/96 →				FCP638	SUMITOMO	
2.0 16V	101	07/96 →	FCP600	AKEBONO				
2.0 16V	101	07/96 →				FCP638	SUMITOMO	
Equus / Centennial								
5.0 GDI	320	09/11 →	FCP4671	MANDO				
i10								
1.0	51	01/11 →	FCP1783	MANDO				
1.1	48	12/07 →	FCP1783	MANDO				
1.1	49	01/08 →	FCP1783	MANDO				
1.1	51	04/11 →	FCP1783	MANDO				
1.1 CRDi	55	01/08 →	FCP1783	MANDO				
1.2	57	11/08 →	FCP1783	MANDO				
1.2	63	04/11 →	FCP1783	MANDO				
i20								
WRC	279	01/17 →	FRP3140	BREMBO				
WRC	279	01/17 →				FRP3140	BREMBO	
i30 (PDE, PD)								
2.0 N	184	07/17 →	FCP5099					
2.0 N	202	07/17 →	FCP5099					
Lantra								
1.6 16V	84	01/91 →	FCP600	AKEBONO				
1.8 16V	93	01/91 → 05/95	FCP600	AKEBONO				
Matrix								
1.5 CRDi		10/01 →	FCP600	AKEBONO				
1.6		06/01 →	FCP600	AKEBONO				
1.8		06/01 →	FCP600	AKEBONO				
Pony								
1.2 Pick-up MkII	41	02/82 → 07/85	FCP810	LUCAS/TRW				
1.4 II (B Series)	50	01/79 → 10/85	FCP810	LUCAS/TRW				
1.6 Pick-up MkII		02/82 → 07/85	FCP810	LUCAS/TRW				
Sonata								
1.8	63	10/88 → 08/89	FCP600	AKEBONO				
1.8	70	10/88 → 08/89	FCP600	AKEBONO				
1.8	73	10/88 → 08/89	FCP600	AKEBONO				
2.4	84	10/88 → 08/94	FCP600	AKEBONO				
2.5 24V	118	06/98 →	FCP600	AKEBONO				
3.0	107	08/89 → 06/96	FCP600	AKEBONO				
SONATA II (Y-2)								
2.0 i	80	01/91 → 10/93	FCP600	AKEBONO				
2.0 i 16V	96	01/91 → 10/93	FCP600	AKEBONO				
SONATA III (Y-3)								
2.0 i	77	06/94 → 08/96	FCP600	AKEBONO				
2.0 i 16V	102	05/93 → 06/98	FCP600	AKEBONO				
Stellar								
1.6	54, 55	09/83 → 12/86	FCP167	LUCAS/TRW	Solid			
Tiburon								
1.6 i 16V	84	01/96 →	FCP600	AKEBONO				
1.6 i 16V	84	01/96 →				FCP638	SUMITOMO	
2.0 i 16V	101	07/96 →	FCP600	AKEBONO				
2.0 i 16V	101	07/96 →				FCP638	SUMITOMO	

For material availability see page 16-18 / Per la disponibilità materiali vedere a pagina 16-18

		kW				NOTE			NOTE
INFINITI									
FX									
35	206	01/03 → 12/05	FCP1786	SUMITOMO					
35	206	01/03 → 12/05					FCP1693	AKEBONO	
35	206	01/05 → 10/05	FCP1786	SUMITOMO					
35	206	01/05 → 10/05					FCP1693	AKEBONO	
35	206	11/05 → 12/06	FCP1690	No BREMBO					
35	206	11/05 → 12/06					FCP1693	AKEBONO	
35 All-wheel Drive	206	01/07 → 12/08	FCP1690	No BREMBO					
35 All-wheel Drive	206	01/07 → 12/08					FCP1693	AKEBONO	
37 AWD	235	10/08 → 06/09	FCP4172	AKEBONO					
37 AWD	235	10/08 → 06/09					FCP4173	AKEBONO	
45	232	01/03 → 12/05	FCP1786	SUMITOMO					
45	232	01/03 → 12/05					FCP1693	AKEBONO	
45	232	01/05 → 10/05	FCP1786	SUMITOMO					
45	232	01/05 → 10/05					FCP1693	AKEBONO	
45	232	11/05 → 12/06	FCP1690	No BREMBO					
45	232	11/05 → 12/06					FCP1693	AKEBONO	
45 All-wheel Drive	232	01/07 → 12/08	FCP1690	No BREMBO					
45 All-wheel Drive	232	01/07 → 12/08					FCP1693	AKEBONO	
50 AWD	287	10/08 → 06/09	FCP4172	AKEBONO					
50 AWD	287	10/08 → 06/09					FCP4173	AKEBONO	
G20									
G20		01/91 → 12/97	FCP600	AKEBONO					
G20		01/98 → 12/00	FCP691	SUMITOMO					
G35									
RWD		01/05 → 12/06	FCP1690	No BREMBO					
RWD		01/05 → 12/06					FCP1693	AKEBONO	
I-30									
I-30		01/96 → 12/98	FCP1430	SUMITOMO					
M35									
M35 / M35 X		01/06 → 12/08	FCP1690	No BREMBO					
M35 / M35 X		01/06 → 12/08					FCP1693	AKEBONO	
M45									
M45 / M45 Sport		01/06 → 12/08	FCP1690	No BREMBO					
M45 / M45 Sport		01/06 → 12/08					FCP1693	AKEBONO	
INNOCENTI									
Elba									
1.3	48	01/91 → 12/92	FCP519	ATE					
1.4	51	01/91 → 10/97	FCP519	ATE					
1.5	56	01/91 → 08/94	FCP519	ATE					
1.6	59	01/91 → 10/97	FCP519	ATE					
1.7	52	01/91 → 03/93	FCP519	ATE					
Koral									
0.9	33	01/89 → 12/92	FCP29	BENDIX					
1.1	42	01/89 → 12/92	FCP29	BENDIX					
Mille									
1.0	35	01/94 → 12/95	FCP519	ATE					
1.0	35	01/95 →	FCP351	BENDIX					
1.4	51	01/95 →	FCP351	BENDIX					
1.7	42	01/94 → 12/97	FCP370	LUCAS/TRW					
Regent									
All i		01/73 →	FCP809	LUCAS/TRW					
All models		01/73 → 12/80	FCP809	LUCAS/TRW					

For material availability see page 16-18 / Per la disponibilità materiali vedere a pagina 16-18

JAGUAR	kW				NOTE			NOTE
420								
4.2		01/67 → 12/68	FCP9	LUCAS/TRW				
Daimler Double Six								
5.3 Series II		09/73 → 12/78	FCP817	LUCAS/TRW				
5.3 Series II		09/73 → 12/78				FCP815	LUCAS/TRW	
5.3 V12 Series III		01/79 → 09/86	FCP817	LUCAS/TRW				
5.3 V12 Series III		01/79 → 09/86				FCP815	LUCAS/TRW	
E-Type								
5.3 24V		01/68 → 12/74	FCP9	LUCAS/TRW				
5.3 24V		01/68 → 12/74				FCP815	LUCAS/TRW	
Sovereign								
2.9	110, 123	09/90 → 09/97	FCP685	ATE				
2.9	110, 123	09/90 → 09/97				FCP578	ATE	
3.2 24V	149, 160	09/90 → 09/97	FCP685	ATE				
3.2 24V	149, 160	09/90 → 09/97				FCP578	ATE	
3.4 Series I (Daimler)	119	01/67 → 12/73	FCP9	LUCAS/TRW				
3.4 Series I (Daimler)	119	01/67 → 12/73				FCP815	LUCAS/TRW	
3.4 Series II (Daimler)	119	01/73 → 12/78	FCP817	LUCAS/TRW				
3.4 Series II (Daimler)	119	01/73 → 12/78				FCP815	LUCAS/TRW	
3.6 (Daimler) 24V	165	09/90 → 09/97	FCP685	ATE				
3.6 (Daimler) 24V	165	09/90 → 09/97				FCP578	ATE	
4.2 Series I (Daimler)	114, 124	01/67 → 12/73	FCP9	LUCAS/TRW				
4.2 Series I (Daimler)	114, 124	01/67 → 12/73				FCP815	LUCAS/TRW	
4.2 Series II (Daimler)	124	01/73 → 12/78	FCP817	LUCAS/TRW				
4.2 Series II (Daimler)	124	01/73 → 12/78				FCP815	LUCAS/TRW	
4.2 Series III (Daimler)	124	01/79 → 09/86	FCP817	LUCAS/TRW				
4.2 Series III (Daimler)	124	01/79 → 09/86				FCP815	LUCAS/TRW	
5.3 24V	196	09/90 → 12/92	FCP685	ATE				
5.3 24V	196	09/90 → 12/92				FCP578	ATE	
5.3 24V	196	01/93 → 09/97	FCP685	ATE				
5.3 24V	196	01/93 → 09/97				FCP578	ATE	
6.0		01/94 → 09/97	FCP685	ATE				
6.0		01/94 → 09/97				FCP578	ATE	
Vanden Plas								
4.2 Series III (Daimler)	124	01/79 → 09/86	FCP817	LUCAS/TRW				
4.2 Series III (Daimler)	124	01/79 → 09/86				FCP815	LUCAS/TRW	
5.3 V12 Series III (Daimler)	219	01/79 → 09/86	FCP817	LUCAS/TRW				
5.3 V12 Series III (Daimler)	219	01/79 → 09/86				FCP815	LUCAS/TRW	
XF (_J05_, CC9)								
2.2 D	120	04/11 →	FCP4045	ATE				
2.2 D	120	04/11 →				FCP1931	ATE	
2.2 D	140	05/11 →	FCP4045	ATE				
2.2 D	140	05/11 →				FCP1931	ATE	
XJ (X300, X330)								
4.0	183	11/94 → 07/97	FCP685	ATE				
4.0	183	11/94 → 07/97				FCP578	ATE	
6 Sovereign 4.0	177	09/94 → 07/97	FCP685	ATE				
6 Sovereign 4.0	177	09/94 → 07/97				FCP578	ATE	
R Super Charged 4.0	235	11/94 → 07/97	FCP685	ATE				
R Super Charged 4.0	235	11/94 → 07/97				FCP578	ATE	
XJ (XJ40, XJ81)								
6 2.9	108	10/86 → 08/90	FCP685	ATE				
6 2.9	108	10/86 → 08/90				FCP578	ATE	
6 2.9	117	10/86 → 08/90	FCP685	ATE				
6 2.9	117	10/86 → 08/90				FCP578	ATE	
6 2.9	123	10/86 → 08/90	FCP685	ATE				
6 2.9	123	10/86 → 08/90				FCP578	ATE	
XJ Coupe								
3.6	136	01/88 → 05/92	FCP817	LUCAS/TRW				
3.6	136	01/88 → 05/92				FCP815	LUCAS/TRW	
3.6	146	01/88 → 05/91	FCP817	LUCAS/TRW				
3.6	146	01/88 → 05/91				FCP815	LUCAS/TRW	
3.6	156	10/83 → 12/89				FCP815	LUCAS/TRW	
3.6	162	10/83 → 12/88	FCP817	LUCAS/TRW				
3.6	162	10/83 → 12/88				FCP815	LUCAS/TRW	

For material availability see page 16-18 / Per la disponibilità materiali vedere a pagina 16-18

...JAGUAR	kW				NOTE			NOTE
XJ12								
5.3 24V	209, 227	09/90 → 12/92	**FCP685**	ATE				
5.3 24V	209, 227	09/90 → 12/92				**FCP578**	ATE	
5.3 24V	211	01/69 → 08/73	**FCP9**	LUCAS/TRW				
5.3 24V	211	01/69 → 08/73				**FCP815**	LUCAS/TRW	
5.3 24V	211	09/73 → 09/86	**FCP817**	LUCAS/TRW				
5.3 24V	211	09/73 → 09/86				**FCP815**	LUCAS/TRW	
6.0 24V	227	09/90 → 09/94	**FCP685**	ATE				
6.0 24V	227	09/90 → 09/94				**FCP578**	ATE	
XJ6								
2.8	96	09/73 → 09/86	**FCP817**	LUCAS/TRW				
2.8	96	09/73 → 09/86				**FCP815**	LUCAS/TRW	
2.9	123	09/73 → 09/86	**FCP817**	LUCAS/TRW				
2.9	123	09/73 → 09/86				**FCP815**	LUCAS/TRW	
3.2 24V	146	09/90 → 12/94	**FCP685**	ATE				
3.2 24V	146	09/90 → 12/94				**FCP578**	ATE	
3.2 24V	146	10/94 → 09/97	**FCP685**	ATE				
3.2 24V	146	10/94 → 09/97				**FCP578**	ATE	
3.4	119	09/73 → 09/86	**FCP817**	LUCAS/TRW				
3.4	119	09/73 → 09/86				**FCP815**	LUCAS/TRW	
3.6 24V	149, 165	09/90 → 09/97	**FCP685**	ATE				
3.6 24V	149, 165	09/90 → 09/97				**FCP578**	ATE	
4.0 24V	163, 229	09/90 → 09/97	**FCP685**	ATE				
4.0 24V	163, 229	09/90 → 09/97				**FCP578**	ATE	
4.2	130	09/73 → 09/86	**FCP817**	LUCAS/TRW				
4.2	130	09/73 → 09/86				**FCP815**	LUCAS/TRW	
6.0 i	229	09/90 → 09/94	**FCP685**	ATE				
6.0 i	229	09/90 → 09/94				**FCP578**	ATE	
XJR								
4.0 i 24V	240	09/94 →	**FCP817**	LUCAS/TRW				
4.0 i 24V	240	09/94 →				**FCP815**	LUCAS/TRW	
XJR-S								
5.3		08/88 → 09/89	**FCP817**	LUCAS/TRW				
5.3		08/88 → 09/89				**FCP815**	LUCAS/TRW	
5.3 Le Mans Ltd Edn		09/90 → 04/91	**FCP685**	ATE				
5.3 Le Mans Ltd Edn		09/90 → 04/91				**FCP578**	ATE	
6.0		09/89 → 05/93	**FCP685**	ATE				
6.0		09/89 → 05/93				**FCP578**	ATE	
XJS								
3.6 24V	146	01/90 → 05/91	**FCP685**	ATE				
3.6 24V	146	01/90 → 05/91				**FCP578**	ATE	
4.0 24V	163, 171	01/87 → 09/96	**FCP685**	ATE				
4.0 24V	163, 171	01/87 → 09/96				**FCP578**	ATE	
5.3 24V	194	01/75 → 12/89	**FCP817**	LUCAS/TRW				
5.3 24V	194	01/75 → 12/89				**FCP815**	LUCAS/TRW	
5.3 i 24V	202	01/90 → 12/93	**FCP685**	ATE				
5.3 i 24V	202	01/90 → 12/93				**FCP578**	ATE	
6.0 i 24V	227	05/93 → 05/95	**FCP685**	ATE				
6.0 i 24V	227	05/93 → 05/95				**FCP578**	ATE	
XJSC Convertible (X27)								
3.6	136	08/87 → 05/91	**FCP817**	LUCAS/TRW				
3.6	136	08/87 → 05/91				**FCP815**	LUCAS/TRW	
3.6	156	08/87 → 05/91	**FCP817**	LUCAS/TRW				
3.6	156	08/87 → 05/91				**FCP815**	LUCAS/TRW	
3.6	162	10/86 → 12/88	**FCP817**	LUCAS/TRW				
3.6	162	10/86 → 12/88				**FCP815**	LUCAS/TRW	
XK Convertible (_J43_)								
3.6	190	10/07 → 07/14	**FRP3134**	ALCON	for vehicles with Performance brakes			
3.6	190	10/07 → 07/14				**FRP3135**	ALCON	for vehicles with Performance brakes
4.2 XK	224	02/08 → 07/14	**FRP3134**	ALCON	for vehicles with Performance brakes			
4.2 XK	224	02/08 → 07/14				**FRP3135**	ALCON	for vehicles with Performance brakes
4.2 XK8	219	03/06 → 07/14	**FRP3134**	ALCON	for vehicles with Performance brakes			
4.2 XK8	219	03/06 → 07/14				**FRP3135**	ALCON	for vehicles with Performance brakes
4.2 XKR	306	03/06 → 07/14	**FRP3134**	ALCON	for vehicles with Performance brakes			
4.2 XKR	306	03/06 → 07/14				**FRP3135**	ALCON	for vehicles with Performance brakes
4.2 XKR	313	08/06 → 07/14	**FRP3134**	ALCON	for vehicles with Performance brakes			
4.2 XKR	313	08/06 → 07/14				**FRP3135**	ALCON	for vehicles with Performance brakes
4.2 XKR	313	08/06 → 07/14				**FCP1931**	ATE	
5.0 V8	283	01/09 → 07/14	**FRP3134**	ALCON	for vehicles with Performance brakes			
5.0 V8	283	01/09 → 07/14				**FRP3135**	ALCON	for vehicles with Performance brakes
5.0 XKR	375	01/09 → 07/14	**FRP3134**	ALCON	for vehicles with Performance brakes			

For material availability see page 16-18 / Per la disponibilità materiali vedere a pagina 16-18

FERODO RACING
Updated on November 2020

		kW				NOTE			NOTE
...JAGUAR									
...XK Convertible (_J43_)									
5.0 XKR		375	01/09 → 07/14				FRP3135	ALCON	for vehicles with Performance brakes
5.0 XKR-S		405	01/11 → 07/14	FRP3134	ALCON	for vehicles with Performance brakes			
5.0 XKR-S		405	01/11 → 07/14				FRP3135	ALCON	for vehicles with Performance brakes
XK Coupe (QQ6_, _J43_)									
3.5		190	07/07 → 07/14	FRP3134	ALCON	for vehicles with Performance brakes			
3.5		190	07/07 → 07/14				FRP3135	ALCON	for vehicles with Performance brakes
4.2 XK		224	02/08 → 07/14	FRP3134	ALCON	for vehicles with Performance brakes			
4.2 XK		224	02/08 → 07/14				FRP3135	ALCON	for vehicles with Performance brakes
4.2 XK8		219	03/06 → 07/14	FRP3134	ALCON	for vehicles with Performance brakes			
4.2 XK8		219	03/06 → 07/14				FRP3135	ALCON	for vehicles with Performance brakes
4.2 XKR		291	03/06 → 07/14	FRP3134	ALCON	From Ch.No.: B00379			
4.2 XKR		291	03/06 → 07/14				FRP3135	ALCON	From Ch.No.: B00379
4.2 XKR		306	03/06 → 07/14	FRP3134	ALCON	for vehicles with Performance brakes			
4.2 XKR		306	03/06 → 07/14				FRP3135	ALCON	for vehicles with Performance brakes
4.2 XKR		313	08/06 → 07/14	FRP3134	ALCON	for vehicles with Performance brakes			
4.2 XKR		313	08/06 → 07/14				FCP1931	ATE	
5.0 V8		283	01/09 → 07/14	FRP3134	ALCON	for vehicles with Performance brakes			
5.0 V8		283	01/09 → 07/14				FRP3135	ALCON	for vehicles with Performance brakes
5.0 XKR		375	01/09 → 07/14	FRP3134	ALCON	for vehicles with Performance brakes			
5.0 XKR		375	01/09 → 07/14				FRP3135	ALCON	for vehicles with Performance brakes
5.0 XKR		390	09/10 → 07/14	FRP3134	ALCON				
5.0 XKR-S		405	01/11 → 07/14	FRP3134	ALCON	for vehicles with Performance brakes			
5.0 XKR-S		405	01/11 → 07/14				FRP3135	ALCON	for vehicles with Performance brakes
XK8									
4.0 V8 32V		216	10/96 →	FCP685	ATE				
4.0 V8 32V		216	10/96 →				FCP578	ATE	
JEEP									
Cherokee									
2.5		78	01/77 → 12/83	FRP3057	KELGATE				
2.8		83	01/77 → 12/83	FRP3057	KELGATE				
4.2		81	01/77 → 12/83	FRP3057	KELGATE				
5.9 16V		128	01/77 → 12/83	FRP3057	KELGATE				
Comanche									
			01/86 → 12/89	FRP3057	KELGATE				
Grand Cherokee IV (WK, WK2)									
6.4 SRT8 4x4		344	03/11 →	FRP3133	BREMBO	For Perforated/Vented brake discs			
Grand Wrangler									
2.5			01/84 → 12/91	FRP3057	KELGATE				
4.0			01/84 → 12/91	FRP3057	KELGATE				
4.2			01/84 → 12/91	FRP3057	KELGATE				
5.2			01/84 → 12/91	FRP3057	KELGATE				
J10									
4.2		81	01/74 → 12/87	FRP3057	KELGATE				
5.9 16V		108, 128	01/74 → 12/87	FRP3057	KELGATE				
J20									
4.2		81	01/74 → 12/87	FRP3057	KELGATE				
5.9 16V		108, 128	01/74 → 12/87	FRP3057	KELGATE				
Wagoneer									
2.5		76	01/77 → 12/83	FRP3057	KELGATE				
4.2		81	01/77 → 12/83	FRP3057	KELGATE				
5.9 16V		120, 128	01/77 → 12/83	FRP3057	KELGATE				

For material availability see page 16-18 / Per la disponibilità materiali vedere a pagina 16-18

	kW				NOTE			NOTE
JENSEN								
FF								
6.3 16V	89	01/68 → 12/71	**FCP9**	LUCAS/TRW				
6.3 16V	89	01/68 → 12/71				**FCP815**	LUCAS/TRW	
Healey								
2.0	88	01/72 → 12/76	**FCP810**	LUCAS/TRW				
Interceptor								
7.2 16V		01/68 → 12/71	**FCP9**	LUCAS/TRW				
7.2 16V		01/68 → 12/71				**FCP815**	LUCAS/TRW	
SP V8								
	283	01/71 → 12/72	**FCP9**	LUCAS/TRW				
	283	01/71 → 12/72				**FCP815**	LUCAS/TRW	
KIA								
Picanto (BA)								
1.0	45	04/04 →	**FCP1783**	MANDO				
1.0	45	11/09 →	**FCP1783**	MANDO				
1.1	48	04/04 →	**FCP1783**	MANDO				
1.1 CRDi	55	11/05 →	**FCP1783**	MANDO				
Picanto (JA)								
1.0	49	03/17 →	**FCP5037**					
1.0	51	03/17 →	**FCP5037**					
1.0 T-GDi	74	03/17 →	**FCP5037**					
1.2	62	03/17 →	**FCP5037**					
Sephia								
1.5 16V	59	02/96 → 12/98	**FCP206**	ATE				
1.5 i 16V	59	02/96 → 12/98	**FCP206**	ATE				
Venga (YN)								
1.4 CRDi 75	55	02/10 →				**FCP1521**	LUCAS/TRW	
1.4 CRDi 75	57	02/10 →				**FCP1521**	LUCAS/TRW	
1.4 CRDi 90	66	02/10 →				**FCP1521**	LUCAS/TRW	
1.4 CVVT	66	02/10 →				**FCP1521**	LUCAS/TRW	
1.6		02/10 →	**FRP3084**	AP RACING				
1.6		02/10 →				**FCP1521**	LUCAS/TRW	
1.6 CRDi 115	85	02/10 →				**FCP1521**	LUCAS/TRW	
1.6 CRDi 128	94	02/10 →				**FCP1521**	LUCAS/TRW	
KTM								
X-Bow								
GT4		01/16 →	**FRP3039**					
GT4		01/16 →				**FRP1078**		
LADA								
1200								
1.2	46	06/72 → 09/86	**FCP96**	BENDIX				
1300								
1.3	49	08/74 → 05/83	**FCP96**	BENDIX				
1500								
1.5	55	11/72 → 07/85	**FCP96**	BENDIX				
1600								
1.6	57	01/75 → 07/92	**FCP96**	BENDIX				
Forma								
1.1		07/91 →	**FCP527**	LUCAS/TRW				
1.3		03/92 → 05/95	**FCP527**	LUCAS/TRW				
1.5		03/92 → 05/95	**FCP527**	LUCAS/TRW				

For material availability see page 16-18 / Per la disponibilità materiali vedere a pagina 16-18

FERODO RACING
Updated on November 2020



	kW				NOTE			NOTE
...LADA								
Nova								
1.2	46	01/70 → 10/90	**FCP96**	BENDIX				
1.3	49	01/75 → 05/91	**FCP96**	BENDIX				
1.5	52, 55	01/75 → 05/91	**FCP96**	BENDIX				
1.6	57	01/75 → 05/91	**FCP96**	BENDIX				
1.7	62	06/94 → 10/98	**FCP96**	BENDIX				
Priora								
1.6	60	12/08 →	**FCP527**	LUCAS/TRW				
1.6	73	02/08 →	**FCP527**	LUCAS/TRW				
1.6 LPG	71	03/09 →	**FCP527**	LUCAS/TRW				
Riva								
All Models		11/72 → 07/85	**FCP96**	BENDIX				
Samara								
1.1		07/90 → 10/92	**FCP527**	LUCAS/TRW				
1.3		03/85 → 10/92	**FCP527**	LUCAS/TRW				
1.5		03/85 → 05/95	**FCP527**	LUCAS/TRW				
Toscana								
1.3	48	12/85 →	**FCP96**	BENDIX				
1.5	55	09/83 → 02/93	**FCP96**	BENDIX				
LAMBORGHINI								
Contach								
LP400	283	01/74 → 12/82	**FCP399**	ATE				
LP500	324	01/74 → 12/74	**FCP399**	ATE				
LP500 S	276	01/82 → 12/85	**FCP399**	ATE				
S Quattrovalvole	313	01/85 → 12/91	**FCP399**	ATE				
Diablo								
GT 5.9	423	10/99 →	**FCP1664**	BREMBO				
GT 5.9	423	10/99 →				**FCP1281**	BREMBO	
GT2	470	01/98 →	**FCP1664**	BREMBO				
GT2	470	01/98 →				**FCP1281**	BREMBO	
SE	386	01/94 → 12/96	**FCP399**	ATE				
SV	390	01/98 →	**FCP1664**	BREMBO				
SV	390	01/98 →				**FCP1281**	BREMBO	
VT	361	01/90 → 08/98	**FCP399**	ATE				
VT	390	08/98 →	**FCP1664**	BREMBO				
VT	390	08/98 →				**FCP1281**	BREMBO	
Diablo Roadster								
5.7	390	01/98 →	**FCP1664**	BREMBO				
5.7	390	01/98 →				**FCP1281**	BREMBO	
Gallardo								
5.0	368	08/03 →	**FCP1664**	BREMBO				
5.0	368	08/03 →				**FCP1281**	BREMBO	
5.0	382	07/05 →	**FCP1664**	BREMBO				
5.0	382	07/05 →				**FCP1281**	BREMBO	
SPYDER 5.2 LP560-4	412	11/08 →	**FCP1664**	BREMBO				
SPYDER 5.2 LP560-4	412	11/08 →				**FCP1281**	BREMBO	
Gallardo Spyder								
5.0	382	08/05 →	**FCP1664**	BREMBO				
5.0	382	08/05 →				**FCP1281**	BREMBO	
Huracan								
GT3		01/18 →	**FRP3153**	BREMBO				
GT3		01/18 →				**FRP3156**	BREMBO	
GT3 Super Trofeo		01/18 →	**FRP3128**	BREMBO				
GT3 Super Trofeo		01/18 →				**FRP1078**	BREMBO	
Jalpa								
P350	188	01/82 → 12/87	**FCP399**	BREMBO				

For material availability see page 16-18 / Per la disponibilità materiali vedere a pagina 16-18

	kW				NOTE			NOTE
...LAMBORGHINI								
Murcielago								
6.2	426	11/01 →	**FCP1664**	BREMBO				
6.2	426	11/01 →				**FCP1281**	BREMBO	
LP640	471	04/06 →	**FCP1664**	BREMBO				
LP640	471	04/06 →				**FCP1281**	BREMBO	
Murcielago Roadster								
6.2	426	08/04 →	**FCP1664**	BREMBO				
6.2	426	08/04 →				**FCP1281**	BREMBO	
Urraco								
P200	133	01/75 → 12/81	**FCP399**	ATE				
P200	133	01/75 → 12/81				**FCP809**	LUCAS/TRW	
P250	162	01/74 → 12/81	**FCP399**	ATE				
P250	162	01/74 → 12/81				**FCP809**	LUCAS/TRW	
P300	195	01/74 → 12/81	**FCP399**	ATE				
P300	195	01/74 → 12/81				**FCP809**	LUCAS/TRW	
LANCIA								
A112								
0.9	34	08/68 → 06/84	**FCP29**	BENDIX				
1.0	52	08/68 → 06/84	**FCP29**	BENDIX				
Beta								
2.0 Montecarlo	85	01/75 → 12/77	**FCP29**	BENDIX				
BETA MONTE CARLO (137_)								
2.0	88	09/75 → 05/81				**FCP22**	BENDIX	
Dedra								
1.6 i ie	55	10/94 → 06/96	**FCP370**	LUCAS/TRW	ABS			
1.6 i ie	55	10/94 → 06/96	**FCP524**	LUCAS/TRW				
1.6 i ie	55	10/94 → 06/96				**FCP409**	LUCAS/TRW	ABS
1.6 i ie	55	10/94 → 06/96				**FCP1324**	LUCAS/TRW	C34
1.6 i ie	55	10/94 → 06/96				**FCP1349**	LUCAS/TRW	C38
1.6 i ie	55	07/96 → 02/97				**FCP409**	LUCAS/TRW	ABS
1.6 i ie	55	07/96 → 02/97				**FCP1324**	LUCAS/TRW	C34
1.6 i ie	55	07/96 → 02/97				**FCP1349**	LUCAS/TRW	C38
1.6 i ie	55, 57	09/89 → 09/94	**FCP370**	LUCAS/TRW	ABS			
1.6 i ie	55, 57	09/89 → 09/94	**FCP524**	LUCAS/TRW				
1.6 i ie	55, 57	09/89 → 09/94				**FCP409**	LUCAS/TRW	ABS
1.8	66, 74	10/94 → 06/96	**FCP370**	LUCAS/TRW	ABS			
1.8	66, 74	10/94 → 06/96	**FCP524**	LUCAS/TRW				
1.8	66, 74	10/94 → 06/96				**FCP360**	BENDIX	
1.8	66, 74	10/94 → 06/96				**FCP409**	LUCAS/TRW	ABS
1.8	66, 74	10/94 → 06/96				**FCP1324**	LUCAS/TRW	C34
1.8	66, 74	10/94 → 06/96				**FCP1349**	LUCAS/TRW	C38
1.8	66, 77	09/89 → 09/94	**FCP370**	LUCAS/TRW	ABS			
1.8	66, 77	09/89 → 09/94	**FCP524**	LUCAS/TRW				
1.8	66, 77	09/89 → 09/94				**FCP360**	BENDIX	
1.8	66, 77	09/89 → 09/94				**FCP409**	LUCAS/TRW	ABS
1.8	83, 96	07/96 → 04/97	**FCP1056**	ATE				
1.8	83, 96	07/96 → 04/97				**FCP360**	BENDIX	
1.8	83, 96	07/96 → 04/97				**FCP409**	LUCAS/TRW	ABS
1.8	83, 96	07/96 → 04/97				**FCP1324**	LUCAS/TRW	C34
1.8	83, 96	07/96 → 04/97				**FCP1349**	LUCAS/TRW	C38
1.9 TD	66	09/89 → 09/94	**FCP370**	LUCAS/TRW	ABS			
1.9 TD	66	09/89 → 09/94	**FCP524**	LUCAS/TRW				
1.9 TD	66	09/89 → 09/94				**FCP360**	BENDIX	
1.9 TD	66	09/89 → 09/94				**FCP409**	LUCAS/TRW	ABS
1.9 TD	66	10/94 → 06/96	**FCP370**	LUCAS/TRW	ABS			
1.9 TD	66	10/94 → 06/96	**FCP524**	LUCAS/TRW				
1.9 TD	66	10/94 → 06/96				**FCP360**	BENDIX	
1.9 TD	66	10/94 → 06/96				**FCP409**	LUCAS/TRW	ABS
1.9 TD	66	10/94 → 06/96				**FCP1324**	LUCAS/TRW	C34
1.9 TD	66	10/94 → 06/96				**FCP1349**	LUCAS/TRW	C38
1.9 TD	66	07/96 → 04/97	**FCP1056**	ATE				
1.9 TD	66	07/96 → 04/97				**FCP360**	BENDIX	
1.9 TD	66	07/96 → 04/97				**FCP409**	LUCAS/TRW	ABS
1.9 TD	66	07/96 → 04/97				**FCP1324**	LUCAS/TRW	C34
1.9 TD	66	07/96 → 04/97				**FCP1349**	LUCAS/TRW	C38
2.0 16V	102	07/94 → 12/97	**FCP370**	LUCAS/TRW				
2.0 16V	102	07/94 → 12/97				**FCP409**	LUCAS/TRW	
2.0 HF Integrale (Turbo)	130	12/90 → 12/94	**FCP565**	LUCAS/TRW				

For material availability see page 16-18 / Per la disponibilità materiali vedere a pagina 16-18

FERODO RACING

Updated on November 2020

...LANCIA	kW					NOTE			NOTE
...Dedra									
2.0 HF Integrale (Turbo)	130	12/90 → 12/94					FCP409	LUCAS/TRW	
2.0 HF Integrale (Turbo)	130	01/94 → 12/97	FCP1052	ATE					
2.0 HF Integrale (Turbo)	130	01/94 → 12/97					FCP409	LUCAS/TRW	
2.0 HF Integrale (Turbo)	130	01/98 →	FCP1052	ATE					
2.0 HF Integrale (Turbo)	130	01/98 →					FCP1324	LUCAS/TRW	C34
2.0 HF Integrale (Turbo)	130	01/98 →					FCP1349	LUCAS/TRW	C38
2.0 i.e. Not Integrale	83	09/89 → 12/94	FCP370	LUCAS/TRW					
2.0 i.e. Not Integrale	83	09/89 → 12/94					FCP360	BENDIX	
2.0 i.e. Not Integrale	83	09/89 → 12/94					FCP409	LUCAS/TRW	ABS
2.0 i.e. Not Integrale	83	01/94 → 12/97	FCP1052	ATE					
2.0 i.e. Not Integrale	83	01/94 → 12/97					FCP409	LUCAS/TRW	
2.0 i.e. Not Integrale	83	01/98 →	FCP1052	ATE					
2.0 i.e. Not Integrale	83	01/98 →					FCP1324	LUCAS/TRW	C34
2.0 i.e. Not Integrale	83	01/98 →					FCP1349	LUCAS/TRW	C38
Delta									
1.6		01/86 → 12/87					FCP360	BENDIX	
1.6 16V	66, 76	05/96 →					FCP409	LUCAS/TRW	
1.6 i.e. (II)	55	01/93 → 04/96	FCP370	LUCAS/TRW					
1.6 Turbo HF		01/83 → 05/86	FCP370	LUCAS/TRW					
1.6 Turbo HF		01/83 → 05/86					FCP360	BENDIX	
1.8	76	01/93 → 04/96	FCP370	LUCAS/TRW					
1.8	76	01/93 → 04/96					FCP409	LUCAS/TRW	
1.8 16V	83	01/96 → 05/97	FCP1056	ATE					
1.8 16V	83	01/96 → 05/97					FCP409	LUCAS/TRW	
1.8 16V	83	06/97 → 04/98	FCP1056	ATE					
1.8 16V	83	06/97 → 04/98					FCP1113	LUCAS/TRW	
1.8 LE, LX, GT 16V	96	05/96 → 05/97	FCP1052	ATE					
1.8 LE, LX, GT 16V	96	05/96 → 05/97					FCP409	LUCAS/TRW	
1.8 LE, LX, GT 16V	96	06/97 → 04/98	FCP1052	ATE					
1.8 LE, LX, GT 16V	96	06/97 → 04/98					FCP1113	LUCAS/TRW	
1.9 TD	66	01/85 → 12/93	FCP370	LUCAS/TRW					
1.9 TD HPE	66	01/94 → 05/96	FCP370	LUCAS/TRW					
1.9 TD HPE	66	01/94 → 05/96					FCP409	LUCAS/TRW	
1.9 TD HPE	66	01/94 → 05/96					FCP1113	LUCAS/TRW	
1.9 TD HPE	66	06/96 →	FCP1056	ATE					
1.9 TD HPE	66	06/96 →					FCP409	LUCAS/TRW	
1.9 TD HPE	66	06/96 →					FCP1113	LUCAS/TRW	
2.0 Evoluzione 4x4 (Turbo) 16V	155, 158	01/91 → 12/93	FCP721	BREMBO					
2.0 Evoluzione 4x4 (Turbo) 16V	155, 158	01/91 → 12/93					FCP726	LUCAS/TRW	
2.0 HF		05/96 →	FCP1052	ATE					
2.0 HPE (II) HF 16V		05/93 →	FCP565	LUCAS/TRW					
2.0 HPE (II) HF 16V		05/93 →	FCP1052	ATE					
2.0 HPE (II) HF 16V		05/93 →					FCP409	LUCAS/TRW	
2.0 HPE (II) HF 16V		05/93 →					FCP1113	LUCAS/TRW	
2.0 i ie (Turbo) 16V		03/91 → 12/93	FCP370	LUCAS/TRW					
2.0 i ie (Turbo) 16V		03/91 → 12/93					FCP409	LUCAS/TRW	
2.0 i ie (Turbo) 16V		05/93 →	FCP565	LUCAS/TRW					
2.0 i ie (Turbo) 16V		05/93 →	FCP1052	ATE					
2.0 i ie (Turbo) 16V		05/93 →					FCP409	LUCAS/TRW	
2.0 i ie (Turbo) 16V		05/93 →					FCP1113	LUCAS/TRW	
2.0 i.e. GT/ HPE (II) 16V		05/93 → 12/95	FCP370	LUCAS/TRW					
2.0 i.e. GT/ HPE (II) 16V		05/93 → 12/95					FCP409	LUCAS/TRW	
2.0 Integrale 4x4 (Turbo) 16V	155, 158	03/91 → 04/96	FCP565	LUCAS/TRW					
2.0 Integrale 4x4 (Turbo) 16V	155, 158	03/91 → 04/96					FCP409	LUCAS/TRW	
2.0 Integrale/Evoluzione HF		01/92 → 12/95	FCP721	BREMBO					
2.0 Integrale/Evoluzione HF		01/92 → 12/95					FCP726	LUCAS/TRW	
2.0 Turbo 4WD HF		01/86 → 10/87	FCP370	LUCAS/TRW					
2.0 Turbo 4WD HF		01/86 → 10/87					FCP360	BENDIX	
2.0 Turbo HF		06/86 → 05/93	FCP370	LUCAS/TRW					
2.0 Turbo HF		06/86 → 05/93					FCP360	BENDIX	
DELTA I (831_)									
2.0 16V HF Integrale (831AB.026)	144	03/89 → 09/91	FCP565	LUCAS/TRW					
2.0 16V HF Integrale (831AB.026)	144	03/89 → 09/91					FCP360	BENDIX	
2.0 HF Integrale (831AB.019)	122	11/86 → 08/88	FCP565	LUCAS/TRW					
2.0 HF Integrale (831AB.019)	122	11/86 → 08/88					FCP360	BENDIX	
2.0 HF Integrale (831AB.024)	133	10/87 → 12/91	FCP565	LUCAS/TRW					
2.0 HF Integrale (831AB.024)	133	10/87 → 12/91					FCP360	BENDIX	
2.0 HF Integrale (831AB.024S, 831AB.028)	130	12/86 → 12/92	FCP565	LUCAS/TRW					
2.0 HF Integrale (831AB.024S, 831AB.028)	130	12/86 → 12/92					FCP360	BENDIX	

For material availability see page 16-18 / Per la disponibilità materiali vedere a pagina 16-18

...LANCIA	kW				NOTE				NOTE
DELTA III (844)									
1.4	110	09/08 →	FCP1468	BOSCH					
1.4	110	09/08 →				FCP1469	BOSCH		
Flavia Berlina									
2.0	85	05/71 → 12/74				FCP809	LUCAS/TRW		
Flavia Coupe									
2.0	85	05/71 → 12/73				FCP809	LUCAS/TRW		
Fulvia Berlina									
1.2	58	08/70 → 12/72				FCP809	LUCAS/TRW		
1.3	62	08/70 → 12/72				FCP809	LUCAS/TRW		
Fulvia Coupe									
1.3	65	01/70 → 07/75				FCP809	LUCAS/TRW		
1.3	66	08/70 → 12/76				FCP809	LUCAS/TRW		
1.6	84	08/70 → 12/73				FCP809	LUCAS/TRW		
Kappa									
2.0 20V	107, 114	01/94 → 08/96	FCP565	LUCAS/TRW					
2.0 20V	107, 114	01/94 → 08/96				FCP995	LUCAS/TRW		
2.0 i SW 20V	114	01/96 → 12/98				FCP995	LUCAS/TRW		
2.0 i Turbo 20V	162	05/98 →	FCP1334	BREMBO					
2.0 Turbo 16V	151	01/94 → 08/96	FCP565	LUCAS/TRW					
2.0 Turbo 16V	151	01/94 → 08/96				FCP995	LUCAS/TRW		
2.0 Turbo 20V	162	10/98 → 10/01	FCP565	LUCAS/TRW					
2.0 Turbo 20V	162	10/98 → 10/01	FCP1334	BREMBO					
2.4 JTD	100	05/98 →				FCP995	LUCAS/TRW		
2.4 TD	91	01/94 → 10/01	FCP565	LUCAS/TRW					
2.4 TD	91	01/94 → 10/01				FCP995	LUCAS/TRW		
3.0 24V	150	01/94 → 09/98	FCP565	LUCAS/TRW					
3.0 24V	150	01/94 → 09/98				FCP995	LUCAS/TRW		
3.0 24V	150	10/98 → 10/01	FCP565	LUCAS/TRW					
3.0 24V	150	10/98 → 10/01	FCP1334	BREMBO					
3.0 24V	150	10/98 → 10/01				FCP995	LUCAS/TRW		
3.0 i 24V	150	05/98 → 10/01	FCP1334	BREMBO					
3.0 i 24V	150	05/98 → 10/01				FCP995	LUCAS/TRW		
Lybra									
1.6 16V	76	07/99 →				FCP1349	LUCAS/TRW		
1.7 16V	96	07/99 →				FCP1349	LUCAS/TRW		
1.8 16V	96	07/99 →				FCP1349	LUCAS/TRW		
1.9 JTD	77	07/99 →				FCP1349	LUCAS/TRW		
2.0 20V	114	07/99 →				FCP1349	LUCAS/TRW		
2.4 JTD	100	07/99 →				FCP1349	LUCAS/TRW		
MUSA (350)									
1.9 i Multijet	74	09/04 →	FCP1467	BOSCH					
Prisma									
1.6 4WD	66	01/86 → 12/89				FCP360	BENDIX		
1.6 4WD	73	01/86 → 12/89				FCP360	BENDIX		
1.6 4WD	80	01/86 → 12/89				FCP360	BENDIX		
1.6 i	77	01/83 → 12/84				FCP360	BENDIX		
1.9 TD	59	01/85 → 12/89	FCP370	LUCAS/TRW					
2.0 4WD	85	04/86 → 12/89				FCP360	BENDIX		
PRISMA (831_)									
1.6	73	08/86 → 02/92	FCP370	LUCAS/TRW					
1.6	73	08/86 → 02/92				FCP360	BENDIX		
1.6	77	01/83 → 04/86	FCP370	LUCAS/TRW					
1.6	77	01/83 → 04/86				FCP360	BENDIX		
1.6 i.e.	80	05/86 → 12/89	FCP370	LUCAS/TRW					
1.6 i.e.	80	05/86 → 12/89				FCP360	BENDIX		
1.6 i.e. Super	66	05/87 → 12/89	FCP370	LUCAS/TRW					
1.6 i.e. Super	66	05/87 → 12/89				FCP360	BENDIX		
Stratos									
All i		01/73 →	FCP11	ATE					
All i		01/73 →				FCP2	ATE		
All Models		01/73 →	FCP11	ATE					
All Models		01/73 →				FCP2	ATE		

For material availability see page 16-18 / Per la disponibilità materiali vedere a pagina 16-18

FERODO RACING
Updated on November 2020

	kW				NOTE				NOTE
...LANCIA									
Thema									
2.0 (Turbo) 16V	148	10/92 → 05/95	**FCP565**	LUCAS/TRW					
2.0 (Turbo) 16V	148	10/92 → 05/95				**FCP360**	BENDIX		
2.0 (Turbo) 16V	148	10/92 → 05/95				**FCP596**	LUCAS/TRW		
2.0 16V	112	08/92 → 12/93	**FCP565**	LUCAS/TRW					
2.0 16V	112	08/92 → 12/93				**FCP596**	LUCAS/TRW		
2.4 TD	74	01/84 → 09/88				**FCP360**	BENDIX		
2.4 TD SW Estate	74	01/86 → 09/88				**FCP360**	BENDIX		
2.5 TD	87	01/84 → 12/87				**FCP596**	LUCAS/TRW		
2.5 TD SW Estate	87	01/88 → 12/94	**FCP565**	LUCAS/TRW					
2.5 TD SW Estate	87	01/88 → 12/94				**FCP596**	LUCAS/TRW		
2.8 V6	108	10/85 → 12/87				**FCP596**	LUCAS/TRW		
2.9 8.32 32V	158	01/86 → 09/88	**FCP565**	LUCAS/TRW					
2.9 8.32 32V	158	01/86 → 09/88				**FCP596**	LUCAS/TRW		
2.9 8.32 32V	158	09/88 → 12/94	**FCP565**	LUCAS/TRW					
2.9 8.32 32V	158	09/88 → 12/94				**FCP596**	LUCAS/TRW		
3.0 V6	126	01/91 → 12/94	**FCP565**	LUCAS/TRW					
3.0 V6	126	01/91 → 12/94				**FCP360**	BENDIX		
3.0 V6	126	01/91 → 12/94				**FCP596**	LUCAS/TRW		
THEMA (834_)									
2000 i.e.	83	03/86 → 09/88				**FCP596**	LUCAS/TRW		
2000 i.e. (834B)	88	11/84 → 09/88				**FCP596**	LUCAS/TRW		
2000 i.e. (834BV)	85	09/87 → 05/92				**FCP596**	LUCAS/TRW		
2000 i.e. Turbo (834C)	122	11/84 → 12/89				**FCP596**	LUCAS/TRW		
Y (840A)									
1.1 i		01/97 → 05/03	**FCP1160**	ATE					
1.1 i	40	01/97 → 05/03	**FCP925**	BENDIX					
1.1 i	40	01/97 → 05/03	**FCP1160**	ATE					
1.2 16V	63	01/97 → 05/03	**FCP1160**	ATE					
1.2 i 16V	63	01/97 → 05/03	**FCP1160**	ATE					
1.2 i LE, LS	44	02/96 → 07/97	**FCP925**	BENDIX					
1.2 LE, LS	44	02/96 → 07/97	**FCP925**	BENDIX					
1.4 i LS, LX	55	02/96 → 02/98	**FCP370**	LUCAS/TRW					
1.4 i LS, LX	55	02/96 → 02/98	**FCP1160**	ATE					
1.4 LS, LX	55	02/96 → 02/98	**FCP925**	BENDIX					
Y10									
1.0	32, 33	06/85 → 06/91	**FCP351**	BENDIX					
1.0	32, 33	06/85 → 06/91	**FCP370**	LUCAS/TRW					
1.0 (Turbo)	62	03/85 → 02/89	**FCP370**	LUCAS/TRW					
1.0 Selectronic		01/90 → 12/96	**FCP351**	BENDIX					
1.1	37	05/89 → 12/96	**FCP351**	BENDIX					
1.1 i		11/92 → 12/96	**FCP351**	BENDIX					
1.2	44	11/95 → 12/99	**FCP925**	BENDIX					
1.3	54, 57	07/89 → 10/91	**FCP351**	BENDIX					
1.3 GT		06/93 → 12/96	**FCP351**	BENDIX					
1.3 GT	53	11/87 → 05/93	**FCP370**	LUCAS/TRW					
1.4	55, 59	01/96 → 05/03	**FCP370**	LUCAS/TRW					
Zeta									
1.9		10/95 → 09/02	**FCP565**	LUCAS/TRW					
2.0	108	10/95 → 09/02	**FCP565**	LUCAS/TRW					
2.0 (Turbo)	108	10/95 → 09/02	**FCP565**	LUCAS/TRW					
2.0 (Turbo)	108	10/95 → 09/02				**FCP850**	ATE		
2.0 JTD		06/99 → 09/02	**FCP565**	LUCAS/TRW					
2.0 JTD		06/99 → 09/02				**FCP850**	ATE		
2.1 TD	80	07/94 → 09/02	**FCP565**	LUCAS/TRW					
2.1 TD	80	07/94 → 09/02				**FCP850**	ATE		
LAND ROVER									
Freelander									
1.8 16V	88	01/98 → 10/00	**FCP613**	LUCAS/TRW					
2.0 TDi	72	01/98 → 10/00	**FCP613**	LUCAS/TRW					
Range Rover III (LM)									
3.0 Td 6	130	03/02 →				**FCP1483**	ATE		
4.2 Supercharged	291	05/05 →	**FCP1334**	BREMBO					
4.4	210	03/02 →				**FCP1483**	ATE		
4.4 D 4x4	230	07/10 → 08/12	**FCP4379**	Brembo					
5.0 V8	375	09/09 → 08/12	**FCP4379**	Brembo					

For material availability see page 16-18 / Per la disponibilità materiali vedere a pagina 16-18

	kW				NOTE			NOTE
...LAND ROVER								
Range Rover IV (LG)								
3.0 4x4	250	10/13 →	**FCP4379**	Brembo				
3.0 4x4	280	06/15 →	**FCP4379**	Brembo				
3.0 D 4x4	155	10/13 →	**FCP4379**	Brembo				
3.0 D 4x4	183	08/12 →	**FCP4379**	Brembo				
3.0 D 4x4	190	08/12 →	**FCP4379**	Brembo				
3.0 D Hybrid 4x4	215	06/15 →	**FCP4379**	Brembo				
3.0 D Hybrid 4x4	225	06/15 →	**FCP4379**	Brembo				
3.0 D Hybrid 4x4	250	10/13 →	**FCP4379**	Brembo				
4.4 D V8 4x4	250	08/12 →	**FCP4379**	Brembo				
5.0 4x4	276	12/13 →	**FCP4379**	Brembo				
5.0 4x4	375	08/12 →	**FCP4379**	Brembo				
5.0 4x4	405	06/15 →	**FCP4379**	Brembo				
Range Rover Sport (LS)								
4.2 Supercharged	291	02/05 →	**FCP1334**	BREMBO				
5.0 4x4	372	04/09 → 03/13	**FCP4379**	Brembo				
5.0 4x4	375	09/09 → 03/13	**FCP4379**	Brembo				
Range Rover Sport (LW)								
3.0 D 4x4	155	04/13 →	**FCP4379**	Brembo				
3.0 D 4x4	183	04/13 →	**FCP4379**	Brembo				
3.0 D 4x4	225	09/14 →	**FCP4379**	Brembo				
3.0 D Hybrid 4x4	215	02/15 →	**FCP4379**	Brembo				
3.0 D Hybrid 4x4	225	06/15 →	**FCP4379**	Brembo				
3.0 D Hybrid 4x4	250	10/13 →	**FCP4379**	Brembo				
4.4 D 4x4	250	10/13 →	**FCP4379**	Brembo				
5.0 4x4	375	04/13 →	**FCP4379**	Brembo				
5.0 4x4	405	09/14 →	**FCP4379**	Brembo				
LEXUS								
GX (URJ15_)								
460	218	11/09 →	**FCP1456**	SUMITOMO				
460	218	11/09 →	**FCP1698**	SUMITOMO				
460	218	11/09 →				**FCP1021**	SUMITOMO	
460	225	01/10 →	**FCP1698**	SUMITOMO				
GX (_J12_)								
470	175	11/01 → 11/09	**FCP1698**	SUMITOMO				
470	175	11/01 → 11/09				**FCP1021**	SUMITOMO	
470	199	11/01 → 11/09	**FCP1698**	SUMITOMO				
470	199	11/01 → 11/09				**FCP1021**	SUMITOMO	
IS II								
IS F (USE20)		11/07 →	**FRP3100**	BREMBO				
LX (FZJ80)								
450 4WD Wagon		01/96 → 12/97	**FCP1456**					
450 4WD Wagon		01/96 → 12/97				**FCP1457**		
LX (URJ201)								
570	270	11/07 →	**FCP1698**	SUMITOMO				
LX (UZJ100)								
470	170	05/98 → 03/08	**FCP1456**	SUMITOMO				
470	170	05/98 → 03/08				**FCP1457**	SUMITOMO	
470	173	09/01 → 03/08	**FCP1456**	SUMITOMO				
470	173	09/01 → 03/08				**FCP1457**	SUMITOMO	
470	197	05/98 → 10/02	**FCP1456**	SUMITOMO				
470	202	08/02 → 03/08	**FCP1456**	SUMITOMO				
470	202	08/02 → 03/08				**FCP1457**	SUMITOMO	
NX (_Z1_)								
200t (ZGZ10_)	175	07/14 →	**FCP4354**	ADVICS				
200t AWD (ZGZ15_)	175	07/14 →	**FCP4354**	ADVICS				
RC F								
GT3		01/17 →	**FRP3155**					
GT3		01/17 →				**FRP3156**		

For material availability see page 16-18 / Per la disponibilità materiali vedere a pagina 16-18

FERODO RACING
Updated on November 2020

	kW				NOTE			NOTE
...LEXUS								
RX (_L1_)								
270 (AGL10_)	138	12/08 → 10/15	**FCP4354**	ADVICS				
350 AWD (GGL15_, GRL10)	204	12/08 → 02/12	**FCP4354**	ADVICS				
450h (GYL10_)	183	12/08 → 10/15	**FCP4354**	ADVICS				
450h AWD (GYL15_)	183	12/08 → 10/15	**FCP4354**	ADVICS				
LOTUS								
23								
1.3		01/62 → 12/66	**FRP5002**					
1.3		01/62 → 12/66				**FRP5002**		
Eclat								
2.2 520,521,522,523 16V	118	01/75 → 12/82	**FCP167**	LUCAS/TRW				
Elan								
1.6 S2, 3, 4 16V		01/66 → 12/70	**FCP809**	LUCAS/TRW	Servo			
1.6 Sprint 16V		01/71 → 12/74	**FCP809**	LUCAS/TRW				
1.6 SS, 130 16V		01/72 → 12/75	**FCP167**	LUCAS/TRW				
Elise								
1.8		01/96 →	**FCP1562**	BREMBO				
1.8		01/96 →				**FCP1560**	BREMBO	
1.8 VVC		01/99 →	**FCP1562**	BREMBO				
1.8 VVC		01/99 →				**FCP1560**	BREMBO	
Elite								
2.2 16V	118	01/73 → 12/82	**FCP9**	LUCAS/TRW				
Esprit								
2.2 S1, S2, S3 (Turbo) 16V		01/75 → 12/86	**FCP116**	ATE				
Evora								
3.5	206	05/09 →	**FRP3083**	AP RACING				
3.5	206	05/09 →				**FRP3115**	AP RACING	
3.5 400	306	06/16 →	**FRP3083**	AP RACING				
3.5 400	306	06/16 →				**FRP3083**	AP RACING	
3.5S	257	12/10 →	**FRP3083**	AP RACING				
3.5S	257	12/10 →				**FRP3115**	AP RACING	
Excel								
2.2 16V	118, 135	01/83 → 12/87	**FCP9**	LUCAS/TRW				
EXIGE (SCC_)								
1.8 Cup 240	181	04/06 → 06/12	**FRP3056**	ATE	2 pistons caliper			
1.8 Cup 240	181	04/06 → 06/12	**FRP3085**	AP RACING	4 pistons calipers			
1.8 Cup 240	181	04/06 → 06/12				**FCP1560**	BREMBO	
Seven / Super Seven								
Third & Fourth generation		01/68 → 12/74	**FCP809**	LUCAS/TRW				
MASERATI								
222								
2.8		01/88 → 12/89	**FCP399**	ATE				
2.8		01/88 → 12/89				**FCP2**	ATE	
2.8		01/89 → 10/90	**FCP256**	ATE				
2.8		01/89 → 10/90				**FCP2**	ATE	
228								
2.8		01/82 → 12/89	**FCP399**	ATE				
2.8		01/82 → 12/89				**FCP2**	ATE	
2.8 18V	165	01/89 → 06/93	**FCP256**	ATE				
2.8 18V	165	01/89 → 06/93				**FCP2**	ATE	
3200 GT								
3.2 Biturbo V8 32V	271	10/98 → 03/02	**FCP1298**	BREMBO				
3.2 Biturbo V8 32V	271	10/98 → 03/02				**FCP451**	ATE	

For material availability see page 16-18 / Per la disponibilità materiali vedere a pagina 16-18

...MASERATI	kW				NOTE			NOTE
420								
2.0	165	01/85 → 12/89	**FCP399**	ATE				
2.0	165	01/85 → 12/89				**FCP2**	ATE	
422								
2.2		01/89 →	**FCP256**	ATE				
2.2		01/89 →				**FCP2**	ATE	
2.2	165	01/85 → 12/89	**FCP399**	ATE				
2.2	165	01/85 → 12/89				**FCP2**	ATE	
425								
2.5		01/85 → 12/89	**FCP399**	ATE				
2.5		01/85 → 12/89				**FCP2**	ATE	
430								
2.8		01/89 → 12/94	**FCP256**	ATE				
2.8		01/89 → 12/94				**FCP2**	ATE	
2.8 18V	185	01/82 → 12/89	**FCP399**	ATE				
2.8 18V	185	01/82 → 12/89				**FCP2**	ATE	
Biturbo								
2.0	161	01/82 → 12/88	**FCP399**	ATE				
2.0	161	01/82 → 12/88				**FCP2**	ATE	
2.0	161	01/94 →	**FCP856**	ATE				
2.0	161	01/94 →				**FCP857**	ATE	
2.5	130	01/82 → 12/88	**FCP399**	ATE				
2.5	130	01/82 → 12/88				**FCP2**	ATE	
2.5	130	01/94 →	**FCP856**	ATE				
2.5	130	01/94 →				**FCP857**	ATE	
2.5	147	01/82 → 12/88	**FCP399**	ATE				
2.5	147	01/82 → 12/88				**FCP2**	ATE	
2.5	147	01/94 →	**FCP856**	ATE				
2.5	147	01/94 →				**FCP857**	ATE	
2.8	185	01/82 → 12/88	**FCP399**	ATE				
2.8	185	01/82 → 12/88				**FCP2**	ATE	
2.8	185	01/94 → 12/96	**FCP856**	ATE				
2.8	185	01/94 → 12/96				**FCP857**	ATE	
Ghibli								
2.0 24V	225	01/89 →	**FCP256**	ATE				
2.0 24V	225	01/89 →				**FCP2**	ATE	
2.8 24V	209	01/89 →	**FCP256**	ATE				
2.8 24V	209	01/89 →				**FCP2**	ATE	
Ghibli (M157)								
3.0	243	08/13 →	**FCP1334**	BREMBO				
3.0 D	184	08/13 →	**FCP1334**	BREMBO				
3.0 D	202	08/13 →	**FCP1334**	BREMBO				
3.0 S	301	08/13 →	**FCP1334**	BREMBO				
3.0 S Q4	301	08/13 →	**FCP1334**	BREMBO				
Gran Turismo								
4.2	298	08/08 →	**FRP3100**	BREMBO				
4.2	298	08/08 →				**FCP1348**	BREMBO	
4.7 S	323	08/08 →	**FRP3100**	BREMBO				
4.7 S	323	08/08 →				**FCP1348**	BREMBO	
Karif								
2.8 18V	165	01/89 →	**FCP256**	ATE				
2.8 18V	165	01/89 →				**FCP2**	ATE	
Quattroporte V								
4.2	295	03/04 →	**FCP1298**	BREMBO	standard vehicle-veicolo standard			
4.2	295	03/04 →	**FCP1334**	BREMBO	armoured vehicle-veicolo blindato			
4.2	295	03/04 →				**FCP1562**	ATE	
4.2	295	01/08 →	**FRP3100**	BREMBO				
4.2	295	01/08 →				**FCP1348**	BREMBO	
4.7 V8	317	01/08 →	**FRP3100**	BREMBO				
4.7 V8	317	01/08 →				**FCP1348**	BREMBO	
Spyder								
2.8 18V	165	01/89 →	**FCP256**	ATE				
2.8 18V	165	01/89 →				**FCP2**	ATE	

For material availability see page 16-18 / Per la disponibilità materiali vedere a pagina 16-18

FERODO RACING
Updated on November 2020

	kW				NOTE			NOTE
...MASERATI								
Spyder Coupe'								
4.2	287	03/02 →	FCP1298	BREMBO				
4.2	287	03/02 →				FCP451	ATE	
MATRA								
Bagheera								
All Models		01/73 → 09/78	FCP2	ATE				
All Models		01/73 → 09/78				FCP72	BENDIX	
MAZDA								
121								
1.25 i 16V	55	01/96 →	FCP1081	ATE	Vented			
1.25 i 16V	55	01/96 →	FCP1082	ATE	Solid			
1.3 (DB) 16V	39, 54	04/93 → 10/95	FCP487	SUMITOMO				
1.3 DB B3	40	02/91 → 01/93	FCP487	SUMITOMO				
1.3 i	37, 44	01/96 →	FCP1081	ATE	Vented			
1.3 i	37, 44	01/96 →	FCP1082	ATE	Solid			
1.8 D (BAJ) (EU)	44	01/96 →	FCP1081	ATE	Vented			
1.8 D (BAJ) (EU)	44	01/96 →	FCP1082	ATE	Solid			
2								
1.3 16V	55	07/07 →	FCP4426	LUCAS/TRW				
1.3 16V	55	06/09 →	FCP4426	LUCAS/TRW				
1.3 16V	63	07/07 →	FCP4426	LUCAS/TRW				
1.4 8V	50	10/07 →	FCP4426	LUCAS/TRW				
1.4 i 16V		04/03 →	FCP1394	ATE				
1.5 16V	76	07/07 →	FCP4426	LUCAS/TRW				
1.5 16V	83	07/07 →	FCP4426	LUCAS/TRW				
1.6 16V	66	10/08 →	FCP4426	LUCAS/TRW				
1.6 16V	70	08/10 →	FCP4426	LUCAS/TRW				
1.6 i 16V		04/03 →	FCP1394	ATE				
3 (BK)								
1.4	62	10/03 → 06/09				FCP1931	ATE	
1.4	59	02/04 → 06/09				FCP1931	ATE	
1.6	77	10/03 → 06/09				FCP1931	ATE	
1.6 DI Turbo	80	06/04 → 06/09				FCP1931	ATE	
2.0	110	10/03 → 06/09				FCP1931	ATE	
2.0 MZR-CD	105	12/06 → 06/09				FCP1931	ATE	
2.3 MPS	191	12/06 → 06/09				FCP1931	ATE	
2.3 MZR	115	03/04 → 03/09				FCP1931	ATE	
2.3 MZR Sport	126	10/03 → 06/09				FCP1931	ATE	
3 (BL)								
1.6 MZR	77	06/09 →				FCP1931	ATE	
1.6 MZR CD	80	06/09 →				FCP1931	ATE	
1.6 MZR CD	85	11/10 →				FCP1931	ATE	
2.0 MZR	110	06/09 →				FCP1931	ATE	
2.0 MZR DISI	111	06/09 →				FCP1931	ATE	
2.2 MZR CD	110	06/09 →				FCP1931	ATE	
2.2 MZR CD	136	06/09 →				FCP1931	ATE	
2.3 MPS Turbo	191	06/09 →	FCP1706	ATE				
2.3 MPS Turbo	191	06/09 →				FCP1931	ATE	
3 Saloon (BK)								
1.6	77	02/04 →				FCP1931	ATE	
1.6 DI Turbo	80	06/04 →				FCP1931	ATE	
2.0	104	04/04 → 06/06				FCP1931	ATE	
2.0	110	02/04 →				FCP1931	ATE	
2.0 MZR-CD	105	12/06 →				FCP1931	ATE	
2.3	118	03/04 → 03/09				FCP1931	ATE	
2.3	126	06/00 → 03/03				FCP1931	ATE	
3 Saloon (BL)								
1.6 MZR	77	06/09 →				FCP1931	ATE	
1.6 MZR CD	85	11/10 →				FCP1931	ATE	
2.0 MZR	110	06/09 →				FCP1931	ATE	
2.0 MZR DISI	111	06/09 →				FCP1931	ATE	
2.2 MZR CD	110	06/09 →				FCP1931	ATE	
2.2 MZR CD	136	06/09 →				FCP1931	ATE	

For material availability see page 16-18 / Per la disponibilità materiali vedere a pagina 16-18

...MAZDA	kW				NOTE			NOTE
323								
1.1		01/89 →	FCP487	SUMITOMO				
1.1 BF1 E1		07/87 → 08/89	FCP487	SUMITOMO				
1.3 BA1 16V	55	05/94 → 08/98	FCP487	SUMITOMO				
1.3 BF B3		01/87 → 01/90	FCP487	SUMITOMO				
1.3 BG B3	49	10/89 → 04/91	FCP487	SUMITOMO				
1.3 BG B3 16V	49	05/91 → 01/93	FCP487	SUMITOMO				
1.3 SW Estate	54	01/86 → 06/87	FCP487	SUMITOMO				
1.5 BA 16V	65	01/94 → 08/98	FCP487	SUMITOMO				
1.5 BG SW Estate		01/90 → 05/91	FCP487	SUMITOMO				
1.5 BW E5, BW B5 + SW Estate	54, 55	01/85 → 04/91	FCP487	SUMITOMO				
1.6 BF B6	63, 77	01/83 → 09/89	FCP487	SUMITOMO				
1.6 BG B6		10/89 → 12/91	FCP487	SUMITOMO				
1.6 BG B6 16V		05/91 → 10/94	FCP487	SUMITOMO				
1.7 D BF	40, 43	07/87 → 08/90	FCP487	SUMITOMO				
1.7 D BF SW Estate L		01/86 → 07/91	FCP487	SUMITOMO				
1.7 D BF SW Estate LX, GLX		01/87 → 08/91	FCP487	SUMITOMO				
1.7 D BF, BG		01/86 → 08/89	FCP487	SUMITOMO				
1.7 D BF, BG		09/89 → 03/91	FCP487	SUMITOMO				
1.8 BG 16V		10/89 → 10/94	FCP487	SUMITOMO				
1.8 BG GT,4WD,Turbo 16V		10/89 → 10/94	FCP487	SUMITOMO				
1.8 Turbo 4WD 16V	122	10/89 → 12/92	FCP487	SUMITOMO				
323 F V (BA)								
2.0 24V	144	08/94 → 09/98	FCP653	SUMITOMO				
5 (CR19)								
1.8	85	03/05 →				FCP1931	ATE	
2.0	107	03/05 →				FCP1931	ATE	
2.0 CD	105	06/05 →				FCP1931	ATE	
2.0 CD	81	03/05 →				FCP1931	ATE	
5 (CW)								
1.6 CD	85	09/10 →				FCP1931	ATE	
2.0	106	01/11 →				FCP1931	ATE	
2.0	110	09/10 →				FCP1931	ATE	
E1300								
1.3 i		01/81 → 08/83	FCP170	SUMITOMO				
E1400								
1.4 i		01/81 → 08/83	FCP170	SUMITOMO				
E1600								
1.6	52, 54	01/83 → 12/84	FCP170	SUMITOMO				
1.6 i BA2N9		01/81 → 08/83	FCP170	SUMITOMO				
Miata								
1.6		01/89 → 12/93	FCP653	SUMITOMO				
1.8		01/94 → 01/03				FCP1012	SUMITOMO	
MX-3								
1.6 Coupe (EC13) 16V	66, 81	09/91 → 10/93	FCP487	SUMITOMO				
1.6 Coupe V6 (EC13) 16V	65	09/91 → 10/93	FCP487	SUMITOMO				
MX-5 I								
1.8 i (NA) 16V	96	02/94 → 04/98	FCP1011	SUMITOMO				
1.8 i (NA) 16V	96	02/94 → 04/98				FCP1012	SUMITOMO	
MX-5 I (NA)								
1.6	66	01/95 → 04/98	FCP1011	SUMITOMO	(+) ABS			
1.6	66	01/95 → 04/98	FCP653	SUMITOMO	(+) ABS			
1.6	85	05/90 → 01/94	FCP1011	SUMITOMO	(+) ABS			
1.6	85	05/90 → 01/94	FCP653	SUMITOMO	(+) ABS			
MX-5 II								
1.6 i (NB) 16V	81	05/98 → 12/00	FCP1011	SUMITOMO				
1.6 i (NB) 16V	81	05/98 → 12/00				FCP1012	SUMITOMO	
1.6 i (NB) 16V	81	01/01 → 10/05	FCP1011	SUMITOMO				
1.8 i (NB) 16V	103	05/98 → 07/00	FCP1011	SUMITOMO				
1.8 i (NB) 16V	103	05/98 → 07/00				FCP1012	SUMITOMO	
1.8 i (NB) 16V	107	11/00 → 10/05				FCP1012	SUMITOMO	

For material availability see page 16-18 / Per la disponibilità materiali vedere a pagina 16-18

FERODO RACING
Updated on November 2020

	kW				NOTE			NOTE
...MAZDA								
MX-5 III								
(NC) 1.8	93	03/05 →				FCP1894	SUMITOMO	
(NC) 2.0	118	09/08 →				FCP1894	SUMITOMO	
MX-5 IV								
(ND) 1.5	96	06/15 →	FCP4821	BREMBO				
(ND) 1.5	96	06/15 →	FCP4873	Advics				
(ND) 1.5	96	06/15 →				FCP1894	SUMITOMO	
(ND) 2.0	118	06/15 →	FCP4821	BREMBO				
(ND) 2.0	118	06/15 →	FCP4873	Advics				
(ND) 2.0	118	06/15 →				FCP1894	SUMITOMO	
RX 7 III (FD)								
1.3 Twin Turbo	176	07/92 → 08/02	FCP483	AKEBONO				
RX-7								
2.3 i		01/84 → 12/86				FCP372	AKEBONO	
2.4 i		01/86 → 12/92				FCP372	AKEBONO	
2.6 Coupe (Turbo)	177	01/93 → 12/96	FCP483	AKEBONO				
2.6 i		01/93 → 12/96				FCP372	AKEBONO	
RX-7 I (SA)								
1.0	77	05/79 → 05/81	FCP483	AKEBONO				
1.1	83	03/84 → 03/86	FCP483	AKEBONO				
1.1	85	01/81 → 03/84	FCP483	AKEBONO				
RX-7 II (FC)								
1.3	110	11/85 → 04/89	FCP483	AKEBONO				
1.3 Turbo	133	06/87 → 11/89	FCP483	AKEBONO				
1.3 Turbo	147	03/89 → 12/91	FCP483	AKEBONO				
RX-7 II Convertible								
1.3 Turbo	147	03/89 → 12/91	FCP483	AKEBONO				
MCLAREN								
570 GT								
3.8	419	06/16 →	FRP3084	AP RACING				
3.8	419	06/16 →				FRP3083	AP RACING	
570 S								
3.8	419	04/15 →	FRP3084	AP RACING				
3.8	419	04/15 →				FRP3083	AP RACING	
650 LT								
Coupe 3.8	496	03/15 →	FRP3084	AP RACING				
Coupe 3.8	496	03/15 →				FRP3083	AP RACING	
Spider 3.8	496	08/16 →	FRP3084	AP RACING				
Spider 3.8	496	08/16 →				FRP3083	AP RACING	
650 S								
Coupe 3.8	478	04/14 →	FRP3084	AP RACING				
Coupe 3.8	478	04/14 →				FRP3083	AP RACING	
GT3 Race Car		01/17 → 12/19	FRP3155	AP RACING				
GT3 Race Car		01/17 → 12/19				FRP1078		
GT3 Race Car		01/20 →	FRP3153	ALCON				
GT3 Race Car		01/20 →				FRP1078	ALCON	
Spider 3.8	478	04/14 →	FRP3084	AP RACING				
Spider 3.8	478	04/14 →				FRP3083	AP RACING	
MP4								
Coupe 12C	441	04/11 → 04/14	FRP3084	AP RACING				
Coupe 12C	441	04/11 → 04/14				FRP3083	AP RACING	
Coupe 12C	460	10/12 → 04/14	FRP3084	AP RACING				
Coupe 12C	460	10/12 → 04/14				FRP3083	AP RACING	
MP4-12C GT3		01/12 →	FRP3138	AKEBONO				
MP4-12C GT3		01/12 →				FRP3139	AKEBONO	
Spider 12C	460	08/12 → 04/14	FRP3084	AP RACING				
Spider 12C	460	08/12 → 04/14				FRP3083	AP RACING	

For material availability see page 16-18 / Per la disponibilità materiali vedere a pagina 16-18

MERCEDES					NOTE			NOTE
190 (W108)								
2.5		01/60 → 12/71	**FCP11**	ATE				
190 (W201)								
1.8	81	09/86 → 12/94	**FCP660**	LUCAS/TRW				
2.0		01/82 → 12/94	**FCP660**	LUCAS/TRW				
2.0 D		01/82 → 12/94	**FCP660**	LUCAS/TRW				
2.3 E 16V	130, 143	01/82 → 12/94	**FCP415**	BENDIX				
2.3 Not 16V	97	01/82 → 12/94	**FCP660**	LUCAS/TRW				
2.5 D	69	01/82 → 12/94	**FCP660**	LUCAS/TRW				
2.5 E 16V	130, 143	01/82 → 12/94	**FCP415**	BENDIX				
2.5 E 16V	130, 143	01/82 → 12/94	**FCP646**	ATE				
2.5 TD	93	11/87 → 12/94	**FCP660**	LUCAS/TRW				
2.6	118	01/82 → 12/94	**FCP660**	LUCAS/TRW				
200								
2.0 D W124 Saloon	55	03/90 → 05/95	**FCP415**	BENDIX				
2.0 D W124 SW Estate		03/90 → 05/95	**FCP415**	BENDIX				
2.0 D W114, 115		01/68 → 12/76	**FCP11**	ATE				
2.0 D W114, 115		01/68 → 12/76				**FCP2**	ATE	
2.0 D W124 Saloon/SW Estate	55	01/85 → 05/95	**FCP415**	BENDIX				
2.0 E W124 Saloon/SW Estate	77	01/85 → 05/95	**FCP415**	BENDIX				
2.0 E W124 Saloon/SW Estate	80	01/85 → 05/95	**FCP415**	BENDIX				
2.0 E W124 Saloon/SW Estate	87	01/85 → 05/95	**FCP415**	BENDIX				
2.0 i W124 E Saloon	77, 87	03/90 → 05/95	**FCP415**	BENDIX				
2.0 i W124 E SW Estate		03/90 → 05/95	**FCP415**	BENDIX				
2.0 i W124 Saloon	77	03/90 → 05/95	**FCP415**	BENDIX				
2.0 i W124 Saloon	80	03/90 → 05/95	**FCP415**	BENDIX				
2.0 i W124 Saloon	87	03/90 → 05/95	**FCP415**	BENDIX				
2.0 i W124 SW Estate		03/90 → 05/95	**FCP415**	BENDIX				
2.0 W114, 115	63	01/68 → 12/76	**FCP11**	ATE				
2.0 W114, 115	63	01/68 → 12/76				**FCP2**	ATE	
2.0 W124 Saloon/SW Estate	77	01/85 → 05/95	**FCP415**	BENDIX				
2.0 W124 Saloon/SW Estate	80	01/85 → 05/95	**FCP415**	BENDIX				
2.0 W124 Saloon/SW Estate	87	01/85 → 05/95	**FCP415**	BENDIX				
200 (W110)								
2.0 D		01/71 → 07/73	**FCP11**	ATE				
220								
2.2 C W124 Coupe		01/87 → 05/93	**FCP415**	BENDIX				
2.2 C W124 Saloon/SW Estate		01/85 → 05/95	**FCP415**	BENDIX				
2.2 D W110		01/71 → 07/73	**FCP11**	ATE				
2.2 D W114, 115	44	01/68 → 12/76	**FCP11**	ATE				
2.2 D W114, 115	44	01/68 → 12/76				**FCP2**	ATE	
2.2 E W124 Coupe		01/87 → 05/93	**FCP415**	BENDIX				
2.2 E W124 Saloon/SW Estate		01/85 → 05/95	**FCP415**	BENDIX				
2.2 i W124 Saloon		03/90 → 05/95	**FCP415**	BENDIX				
2.2 i W124 SW Estate		03/90 → 05/95	**FCP415**	BENDIX				
230								
2.3 C W124 Coupe		01/87 → 08/88	**FCP415**	BENDIX				
2.3 C W124 Saloon/SW Estate		01/85 → 06/93	**FCP415**	BENDIX				
2.3 E W124 Coupe		01/87 → 08/89	**FCP415**	BENDIX				
2.3 E W124 Saloon/SW Estate	97	01/85 → 06/93	**FCP415**	BENDIX				
2.3 W114, 115		01/68 → 12/73	**FCP11**	ATE				
2.3 W114, 115		01/68 → 12/73				**FCP2**	ATE	
234								
All i W114, 115		01/68 → 12/73	**FCP11**	ATE				
All i W114, 115		01/68 → 12/73				**FCP2**	ATE	
W114, 115		01/68 → 12/73	**FCP11**	ATE				
W114, 115		01/68 → 12/73				**FCP2**	ATE	
250								
2.5 D W124 Saloon	66	03/90 → 05/95	**FCP415**	BENDIX				
2.5 D W124 SW Estate		03/90 → 05/95	**FCP415**	BENDIX				
2.5 D W124 Saloon/SW Estate	66	01/85 → 05/95	**FCP415**	BENDIX				
2.5 TD W124 Saloon	93	01/85 → 02/90	**FCP415**	BENDIX				
260								
2.6 E W124 Saloon/SW Estate	118	01/85 → 06/93	**FCP415**	BENDIX				

For material availability see page 16-18 / Per la disponibilità materiali vedere a pagina 16-18

FERODO RACING
Updated on November 2020



kW

...MERCEDES

					NOTE			NOTE
280								
2.8 E W124 Saloon/SW Estate	125	01/85 → 05/95	**FCP415**	BENDIX				
2.8 i W124 E Saloon		03/90 → 05/95	**FCP415**	BENDIX				
2.8 i W124 E SW Estate		03/90 → 05/95	**FCP415**	BENDIX				
300								
3.0 C W124 Coupe	132	01/87 → 08/88	**FCP415**	BENDIX				
3.0 C W124 Coupe 24V	162	01/89 → 12/93	**FCP646**	ATE				
3.0 C W124 Saloon 24V	162	01/89 → 06/93	**FCP646**	ATE				
3.0 C W124 Saloon/SW Estate	132	01/85 → 05/95	**FCP415**	BENDIX				
3.0 D W124 Saloon	80	03/90 → 05/95	**FCP415**	BENDIX				
3.0 D W124 SW Estate		03/90 → 05/95	**FCP415**	BENDIX				
3.0 D W124 Coupe	80	01/87 → 08/88	**FCP415**	BENDIX				
3.0 D W124 Coupe 24V		01/89 → 12/93	**FCP646**	ATE				
3.0 D W124 Saloon/SW Estate	80	01/85 → 05/95	**FCP415**	BENDIX				
3.0 E W124 Coupe	132	01/87 → 08/88	**FCP415**	BENDIX				
3.0 E W124 Coupe 24V	162	01/89 → 12/93	**FCP646**	ATE				
3.0 E W124 Saloon 24V	162	01/89 → 06/93	**FCP646**	ATE				
3.0 E W124 Saloon/SW Estate	132	01/85 → 05/95	**FCP415**	BENDIX				
3.0 i W124 C Saloon		03/90 → 05/95	**FCP415**	BENDIX				
3.0 i W124 C SW Estate		03/90 → 05/95	**FCP415**	BENDIX				
3.0 i W124 E Saloon	132	03/90 → 05/95	**FCP415**	BENDIX				
3.0 i W124 E SW Estate		03/90 → 05/95	**FCP415**	BENDIX				
300 (W115)								
3.0		01/60 → 12/71	**FCP11**	ATE				
320								
3.2 E W124 Coupe		01/89 →	**FCP646**	ATE				
3.2 E W124 Saloon, SW Estate		01/91 → 05/95	**FCP646**	ATE				
3.2 i W124 E Coupe		10/92 → 05/93	**FCP646**	ATE				
400								
4.2 E W124 Saloon 32V	205	01/91 → 06/93	**FCP646**	ATE				
420								
4.2 E W124 Saloon		07/93 → 05/95	**FCP646**	ATE				
500								
5.0 E W124 Saloon		07/93 → 05/95	**FCP646**	ATE				
5.0 E W124 Saloon 32V	235	01/91 → 06/93	**FCP646**	ATE				
A-CLASS (W176)								
A 45 AMG 4-matic (176.052)	265	06/13 → 06/15	**FCP4806**	BREMBO				
A 45 AMG 4-matic (176.052)	265	06/13 → 06/15				**FCP4587**	LUCAS/TRW	
AMG A 45 4-matic (176.052)	280	07/15 →	**FCP4806**	BREMBO				
AMG A 45 4-matic (176.052)	280	07/15 →				**FCP4587**	LUCAS/TRW	
A190								
1.9 (W168)	92	11/97 → 02/99				**FCP541**	LUCAS/TRW	
AMG								
GT3		01/19 →	**FRP3155**	AP RACING				
GT3		01/19 →				**FRP3156**	AP RACING	
GT4		01/18 →	**FRP3155**	AP RACING				
GT4		01/18 →				**FRP3156**	AP RACING	
AMG GT (C190)								
GT R (190.379)	430	11/16 →	**FCP4711**	BREMBO				
GT R (190.379)	430	11/16 →				**FCP5108**		
GT S (190.378)	375	10/14 →	**FCP4711**	BREMBO				
GT S (190.378)	375	10/14 →				**FCP5108**		
AMG GT (X290)								
63 4-matic+ (290.688)	430	07/18 →				**FCP5108**		
63 S 4-matic+ (290.689)	470	07/18 →				**FCP5108**		
C-CLASS (S203)								
3.0 20v C30 CDi AMG	170	08/02 → 12/04	**FCP1661**	BREMBO				

For material availability see page 16-18 / Per la disponibilità materiali vedere a pagina 16-18

...MERCEDES	kW				NOTE			NOTE
C-CLASS (W203)								
1.8 16v with sports package	105	05/02 → 04/04	FCP1661	BREMBO				
1.8 16v with sports package	120	05/02 → 04/04	FCP1661	BREMBO				
1.8 16v with sports package	141	11/03 → 04/04	FCP1661	BREMBO				
1.8 CGi 16v with sports package	125	07/03 → 04/04	FCP1661	BREMBO				
2.2 CDi 16v with sports package	85	06/00 → 03/04	FCP1661	BREMBO				
2.2 CDi 16v with sports package	90	04/03 → 04/04	FCP1661	BREMBO				
2.2 CDi 16v with sports package	105	06/00 → 12/04	FCP1661	BREMBO				
2.2 CDi 16v with sports package	110	04/03 → 04/04	FCP1661	BREMBO				
2.2 CDi 16v with sports package	75	02/01 → 03/04	FCP1661	BREMBO				
2.6 18v with sports package	125	06/00 → 04/04	FCP1661	BREMBO				
2.7 CDi 20v with sports package	125	06/00 → 04/04	FCP1661	BREMBO				
3.0 20v C30CDi AMG	170	08/02 → 12/04	FCP1661	BREMBO				
3.0 CDi 24v with sports package	165	01/05 → 02/07	FCP1661	BREMBO				
3.2 18v C32 AMG	260	11/00 → 12/04	FCP1661	BREMBO				
3.2 18v with sports package	160	06/00 → 04/04	FCP1661	BREMBO				
3.5 24v 4-matic C350	200	03/05 → 02/07	FCP1661	BREMBO				
3.5 24v C350 with sports package	200	01/05 → 02/07	FCP1661	BREMBO				
5.4 24v C55 AMG	270	08/03 → 02/07	FCP1661	BREMBO				
C-CLASS (W204)								
C63 AMG	336	02/08 →	FRP3133	Brembo				
C63 AMG	358	02/08 →	FRP3133	Brembo				
C-CLASS (W205)								
AMG C 63 (205.086)	350	10/14 →	FCP4711	BREMBO				
AMG C 63 (205.086)	350	10/14 →				FCP5108		
AMG C 63 S (205.087)	375	10/14 →	FCP4711	BREMBO				
AMG C 63 S (205.087)	375	10/14 →				FCP5108		
C-CLASS Convertible (A205)								
AMG C 63 (205.486)	350	10/16 →				FCP5108		
AMG C 63 S (205.487)	375	10/16 →				FCP5108		
C-CLASS Coupe (C204)								
C63 AMG	336	06/11 →	FRP3133	Brembo				
C63 AMG	358	01/12 →	FRP3133	Brembo				
C63 AMG	380	01/12 →	FRP3133	Brembo				
C-CLASS Coupe (C205)								
AMG C 63 (205.386)	350	02/16 →				FCP5108		
AMG C 63 S (205.387)	375	02/16 →				FCP5108		
C-CLASS Coupe (CL203)								
3.0 20v CDi AMG	170	08/02 → 01/08	FCP1661	BREMBO				
3.2 18v	160	06/02 → 08/05	FCP1661	BREMBO				
C-CLASS Estate (S204)								
C63 AMG	336	02/08 →	FRP3133	Brembo				
C63 AMG	358	01/12 →	FRP3133	Brembo				
C-CLASS T-Model (S203)								
1.8 16v with sports package	105	05/02 → 04/04	FCP1661	BREMBO				
1.8 16v with sports package	120	05/02 → 04/04	FCP1661	BREMBO				
1.8 16v with sports package	141	11/03 → 04/04	FCP1661	BREMBO				
1.8 CGi 16v with sports package	125	07/03 → 07/04	FCP1661	BREMBO				
2.2 CDi 16v with sports package	105	11/00 → 07/03	FCP1661	BREMBO				
2.2 CDi 16v with sports package	110	08/03 → 04/04	FCP1661	BREMBO				
2.2 CDi 16v with sports package	75	03/01 → 03/03	FCP1661	BREMBO				
2.2 CDi 16v with sports package	85	11/00 → 07/03	FCP1661	BREMBO				
2.2 CDi 16v with sports package	90	04/03 → 04/04	FCP1661	BREMBO				
2.6 18v with sports package	125	11/00 → 04/04	FCP1661	BREMBO				
2.7 CDi 20v with sports package	125	11/00 → 04/04	FCP1661	BREMBO				
3.0 CDi 24v with sports package	165	01/05 → 11/07	FCP1661	BREMBO				
3.2 18v C32 AMG	260	11/00 → 12/04	FCP1661	BREMBO				
3.2 18v with sports package	160	11/00 → 04/04	FCP1661	BREMBO				
3.5 24v C350 with sports package	200	01/05 → 11/07	FCP1661	BREMBO				
3.5 24v C350Â 4-matic	200	04/05 → 11/07	FCP1661	BREMBO				
5.4 24v C55 AMG	270	08/03 → 11/07	FCP1661	BREMBO				
C-CLASS T-Model (S205)								
AMG C 63 (205.286)	350	10/15 →				FCP5108		
AMG C 63 S (205.287)	375	10/15 →				FCP5108		

For material availability see page 16-18 / Per la disponibilità materiali vedere a pagina 16-18

FERODO RACING
Updated on November 2020

...MERCEDES	kW				NOTE				NOTE
C200									
2.0 i T202 SW Estate Kompressor 16V	100, 141	11/96 → 03/01	**FCP1049**	ATE					
2.0 i W202 Kompressor 16V	100, 141	10/95 → 05/00	**FCP1049**	ATE					
C230									
2.3 (W202) Kompressor 16V	142	10/95 → 05/00	**FCP1049**	ATE					
C240									
2.4 (W202) 18V	125	06/97 → 05/00	**FCP1049**	ATE					
C250									
2.5 TD T202 SW Estate 20V	110	06/96 → 03/01	**FCP1049**	ATE					
2.5 TD W202 20V	110	10/95 → 05/00	**FCP1049**	ATE					
C280									
2.8 (W202)	145	06/97 → 05/00	**FCP1049**	ATE					
C36 AMG									
3.6 24V	206	01/95 → 03/97	**FCP1049**	ATE					
3.6 i 24V (W202)	206	07/94 → 05/00	**FCP646**	ATE					
C43 AMG									
4.3 24v (S202)	225	04/97 → 05/00	**FCP1001**	ATE					
CL500									
5.0 24v (C215)	225	09/99 → 12/06	**FCP1661**	BREMBO					
CL600									
5.8 36v (C215)	270	09/99 → 07/02	**FCP1661**	BREMBO					
CLA Coupe (C117)									
AMG CLA 45 4-matic (117.352)	280	07/15 →	**FCP4806**	BREMBO					
AMG CLA 45 4-matic (117.352)	280	07/15 →				**FCP4587**	LUCAS/TRW		
CLA 45 AMG 4-matic (117.352)	265	07/13 → 06/15	**FCP4806**	BREMBO					
CLA 45 AMG 4-matic (117.352)	265	07/13 → 06/15				**FCP4587**	LUCAS/TRW		
CLA Shooting Brake (X117)									
AMG CLA 45 4-matic (117.952)	280	07/15 →	**FCP4806**	BREMBO					
AMG CLA 45 4-matic (117.952)	280	07/15 →				**FCP4587**	LUCAS/TRW		
CLA 45 AMG 4-matic (117.952)	265	01/15 → 06/15	**FCP4806**	BREMBO					
CLA 45 AMG 4-matic (117.952)	265	01/15 → 06/15				**FCP4587**	LUCAS/TRW		
CLK (C209)									
63 AMG	373	05/07 → 05/09	**FRP3133**	Brembo					
CLK 55 AMG (C209)									
5.5 (209.376)	270	09/02 → 11/06	**FRP3100**	BREMBO	6 pistons brake systems				
5.5 (209.376)	270	09/02 → 11/06	**FCP1661**	BREMBO					
CLK200									
2.0 Coupe (C208) 16V	100, 141	07/97 →	**FCP1049**	ATE					
CLK230									
2.3 Coupe (C208) Kompressor 16V	142	07/97 →	**FCP1049**	ATE					
CLK320									
3.0 CDi 24v (C209) with sports package	165	03/05 →	**FCP1661**	BREMBO					
3.2 Coupe (C208) 18V	160	07/97 →	**FCP1050**	ATE					
CLK350									
3.5 24v (C209) with sports package	200	03/05 →	**FCP1661**	BREMBO					
CLK430 (C208)									
4.3 24v	205	08/99 → 01/03	**FCP1001**	ATE					
CLK500									
5.0 24v (C209) (209.375)	225	06/02 → 05/09	**FCP1661**	BREMBO					
5.5 32v (C209) (209.372)	285	09/06 → 05/09	**FCP1661**	BREMBO					

For material availability see page 16-18 / Per la disponibilità materiali vedere a pagina 16-18

...MERCEDES	kW				NOTE			NOTE
CLK55 AMG								
5.4 24v (C208)	255	10/98 → 07/02	**FCP1001**	ATE				
CLS (C219)								
CLS 63 AMG	378	04/06 → 12/10	**FRP3133**	Brembo				
CLS280								
3.0 24v (C219)	170	07/08 →	**FCP1661**	BREMBO				
CLS300								
3.0 24v (C219)	170	04/09 →	**FCP1661**	BREMBO				
CLS320								
3.0 CDi 24v (C219)	165	03/05 →	**FCP1661**	BREMBO				
CLS350								
3.0 CDi 24v (C219)	165	04/09 →	**FCP1661**	BREMBO				
3.5 24v (C219)	200	07/04 → 12/10	**FCP1661**	BREMBO				
3.5 CGi 24v (C219)	215	04/06 →	**FCP1661**	BREMBO				
CLS500								
5.0 24v (C219)	225	07/04 → 03/06	**FCP1661**	BREMBO				
E-CLASS (W211)								
2.5 24v with sports package	150	05/07 →	**FCP1661**	BREMBO				
2.5 24v with sports package	150	09/07 →	**FCP1661**	BREMBO				
3.0 24v 4-matic with sports package	170	03/05 →	**FCP1661**	BREMBO				
3.0 24v without sports package	170	06/05 → 08/05	**FCP1661**	BREMBO				
3.0 CDi 24v 4-matic with sports package	165	03/05 → 10/05	**FCP1001**	ATE				
3.0 CDi 24v Blue TEC with sports package	155	09/07 → 12/08	**FCP1661**	BREMBO				
3.0 CDi 24v with sports package	165	03/05 →	**FCP1661**	BREMBO				
3.2 18v	165	04/02 → 09/03	**FCP1661**	BREMBO				
3.2 CDi 24v For armoured vehicles	130	08/03 → 07/05	**FCP1661**	BREMBO				
3.2 CDi 24v For armoured vehicles	150	11/02 → 07/06	**FCP1661**	BREMBO				
3.5 24v 4-matic with sports package	200	08/04 → 06/05	**FCP1001**	ATE	To Ch. 870950			
3.5 24v without sports package	200	08/04 →	**FCP1661**	BREMBO				
3.5 24v without sports package	200	08/04 → 08/05	**FCP1661**	BREMBO				
3.5 CGi 24v	215	05/06 →	**FCP1661**	BREMBO				
4.0 CDi 32v	191	02/03 → 07/05	**FCP1661**	BREMBO				
5.0 24v	225	04/02 → 06/05	**FCP1661**	BREMBO				
5.0 24v 4-matic without sports package	225	08/03 → 07/06	**FCP1001**	ATE				
5.5 32v without sports package	285	05/06 →	**FCP1661**	BREMBO				
5.5 32v 4-matic without sports package	285	05/06 →	**FCP1661**	BREMBO				
E63 AMG	378	03/06 → 12/08	**FRP3133**	Brembo				
E-CLASS Estate (S211)								
E63 AMG	378	03/06 → 07/09	**FRP3133**	Brembo				
E-CLASS Estate (S212)								
E63 AMG	386	02/11 →	**FRP3133**	Brembo				
E-CLASS T-Model (S211)								
2.5 24v	150	05/07 →	**FCP1661**	BREMBO				
3.0 24v 4-matic with sports package	170	06/05 → 08/05	**FCP1001**	ATE	To Ch. 870950			
3.0 24v with sports package	170	03/05 →	**FCP1661**	BREMBO				
3.0 CDi 24v	165	03/05 →	**FCP1661**	BREMBO				
3.2 18v	165	04/03 → 07/04	**FCP1661**	BREMBO				
3.2 CDi 24v	150	04/03 → 07/06	**FCP1661**	BREMBO				
3.5 24v	200	08/04 → 07/06	**FCP1661**	BREMBO				
3.5 24v 4-matic	200	08/04 →	**FCP1661**	BREMBO				
3.5 CGi 24v	215	05/06 →	**FCP1661**	BREMBO				
5.0 24v	225	08/03 → 07/06	**FCP1661**	BREMBO				
5.0 24v 4-matic	225	08/03 → 08/05	**FCP1001**	ATE	To Ch. 870950			
5.5 32v 4-matic without sports package	285	05/06 →	**FCP1661**	BREMBO				
5.5 32v without sports package	285	05/06 →	**FCP1661**	BREMBO				
E200								
2.0 (W210)		06/95 →	**FCP1049**	ATE				
2.0 D (W124)	55	07/93 → 06/95	**FCP415**	BENDIX				
E200 T-Model (S211)								
1.8 16v with sports package	135	04/06 →	**FCP1661**	BREMBO				

For material availability see page 16-18 / Per la disponibilità materiali vedere a pagina 16-18

FERODO RACING
Updated on November 2020

...MERCEDES	kW				NOTE				NOTE
E200 (W211)									
1.8 16v E200 NGT with sports package	120	03/04 →	FCP1661	BREMBO					
1.8 16v with sports package	120	08/02 → 07/06	FCP1661	BREMBO					
1.8 16v with sports package	135	04/06 →	FCP1661	BREMBO					
1.8 CGi 16v with sports package	125	08/02 → 06/05	FCP1661	BREMBO					
2.2 CDi 16v with sports package	100	04/06 →	FCP1661	BREMBO					
2.2 CDi 16v with sports package	75	11/02 → 07/05	FCP1661	BREMBO					
2.2 CDi 16v with sports package	90	07/02 → 07/06	FCP1661	BREMBO					
E200 T-Model (S211)									
1.8 16v with sports package	120	04/03 → 07/06	FCP1661	BREMBO					
E220									
2.2 (W210) 16V	70	06/95 → 05/98	FCP1049	ATE					
2.2 D (W210)		06/95 → 05/98	FCP1049	ATE					
E220 (W211)									
2.2 CDi 16v with sports package	100	03/02 →	FCP1661	BREMBO					
2.2 CDi 16v with sports package	110	04/02 → 07/06	FCP1661	BREMBO					
2.2 CDi 16v with sports package	125	11/05 →	FCP1661	BREMBO					
E230									
2.3 (W210) 16V	110	06/95 → 10/97	FCP1049	ATE					
E240									
2.4 i W210	125	04/97 → 03/02	FCP1049	ATE					
2.4 i W210 V6 ESP	125	04/97 → 03/02	FCP1050	ATE					
E250									
2.5 D (W210) 20V	83	06/95 → 07/99	FCP1049	ATE					
E270									
2.7 CDi W210	125	07/99 → 03/02	FCP1049	ATE					
2.7 CDi W210 ESP	125	07/99 → 03/02	FCP1050	ATE					
E270 T-Model (S211)									
2.7 CDi 20v	130	04/03 → 07/05	FCP1661	BREMBO					
E280									
2.8 (W210)	142	06/95 → 11/96	FCP1050	ATE					
2.8 (W210) 24V	142	12/96 → 10/97	FCP1050	ATE					
E280 (W211)									
3.0 CDi 24v with sports package	140	03/05 →	FCP1661	BREMBO					
E280 (W211)									
3.0 CDi 24v 4-matic with sports package	140	03/05 → 08/05	FCP1001	ATE	To Ch. 870950				
E280 T-Model (S211)									
3.0 CDi 24v	140	03/05 →	FCP1661	BREMBO					
3.0 CDi 24v 4-matic without sports package	140	03/05 → 08/05	FCP1661	BREMBO					
E290									
2.9 TD (T210) SW Estate	95	06/95 →	FCP1049	ATE					
2.9 TD (W210)	95	06/95 →	FCP1049	ATE					
E300									
3.0 D (W210)	100	06/95 → 01/96	FCP1049	ATE					
3.0 TD (W210) 24V	130	12/96 → 07/99	FCP1050	ATE					
E320									
3.2 (W210) 18V	162, 165	06/95 → 12/97	FCP1050	ATE					
3.2 CDi T210		01/99 → 03/03	FCP1050	ATE					
3.2 CDi W210	145	07/99 → 03/02	FCP1050	ATE					
3.2 i W124 E 24V		07/93 → 07/96	FCP646	ATE					
3.2 i W210	165	12/97 → 03/02	FCP1050	ATE					
E36 AMG									
3.6 i (W210)	200	02/96 → 03/02	FCP646	ATE					

For material availability see page 16-18 / Per la disponibilità materiali vedere a pagina 16-18

...MERCEDES	kW				NOTE				NOTE
E360 AMG									
3.6 24V		02/96 →	FCP646	ATE					
E420									
4.2 (W210) 32V	205	01/96 → 10/97	FCP646	ATE					
E430									
4.3 i T210 SW Estate		09/97 →	FCP646	ATE					
4.3 i W210		09/97 → 03/02	FCP646	ATE					
E430 (S210)									
4.3 24v	205	09/99 → 05/03	FCP1001	ATE					
E50 AMG									
5.0 32v (W210)	255	09/96 → 10/97	FCP1001	ATE					
E55 AMG									
5.4 24v (S210)	260	11/97 → 05/03	FCP1001	ATE					
5.4 24v (W210)	260	01/97 → 11/02	FCP1001	ATE					
GL-CLASS (X166)									
GL 350 CDI / BlueTec 4-matic (166.823, 166.824)	190	07/12 →				FCP4587	LUCAS/TRW		
GL 350 CDI / BlueTEC 4-matic (166.824)	179	07/12 →				FCP4587	LUCAS/TRW		
GL 400 4-matic (166.856)	245	08/13 →				FCP4587	LUCAS/TRW		
GL 450 4-matic	270	09/14 →				FCP4587	LUCAS/TRW		
GL 450 4-matic (166.872)	270	07/12 →				FCP4587	LUCAS/TRW		
GL 500 4-matic (166.871)	310	04/15 →				FCP4587	LUCAS/TRW		
GL 500 4-matic (166.873)	320	07/12 →				FCP4587	LUCAS/TRW		
GL 63 AMG 4-matic (166.874)	410	07/12 →	FRP3133	Brembo					
GL 63 AMG 4-matic (166.874)	410	07/12 →				FCP4587	LUCAS/TRW		
GLA-CLASS (X156)									
AMG GLA 45 4-matic (156.952)	280	07/15 →	FCP4806	BREMBO					
AMG GLA 45 4-matic (156.952)	280	07/15 →				FCP4587	LUCAS/TRW		
GLA 45 AMG 4-matic (156.952)	265	05/14 → 06/15	FCP4806	BREMBO					
GLA 45 AMG 4-matic (156.952)	265	05/14 → 06/15				FCP4587	LUCAS/TRW		
GLE (W166)									
250 d (166.006)	150	04/15 →				FCP4587	LUCAS/TRW		
250 d 4-matic (166.004)	150	04/15 →				FCP4587	LUCAS/TRW		
320 4-matic (166.062)	200	10/15 →				FCP4587	LUCAS/TRW		
350 (166.058)	225	11/15 →				FCP4587	LUCAS/TRW		
350 4-matic (166.057)	225	11/15 →				FCP4587	LUCAS/TRW		
350 d 4-matic (166.024)	190	04/15 →				FCP4587	LUCAS/TRW		
400 4-matic (166.056)	245	04/15 →				FCP4587	LUCAS/TRW		
450 AMG 4-matic (166.064)	270	10/15 → 04/16				FCP4587	LUCAS/TRW		
500 4-matic (166.073)	300	04/15 →				FCP4587	LUCAS/TRW		
500 4-matic (166.073)	320	04/15 →				FCP4587	LUCAS/TRW		
500 4-matic (166.073)	335	10/15 →				FCP4587	LUCAS/TRW		
500 e 4-matic (166.063)	245	04/15 →				FCP4587	LUCAS/TRW		
500 e 4-matic (166.063)	325	04/15 →				FCP4587	LUCAS/TRW		
AMG 43 4-matic (166.064)	270	05/16 →				FCP4587	LUCAS/TRW		
AMG 63 4-matic (166.074)	386	04/15 →				FCP4587	LUCAS/TRW		
AMG 63 4-matic (166.074)	410	04/15 →				FCP4587	LUCAS/TRW		
AMG 63 S 4-matic (166.075)	430	04/15 →				FCP4587	LUCAS/TRW		
GLE Coupe (C292)									
320 4-matic (292.362)	200	09/15 →				FCP4587	LUCAS/TRW		
350 d 4-matic (292.323, 292.324)	190	03/15 →				FCP4587	LUCAS/TRW		
350 d 4-matic (292.324)	179	03/16 →				FCP4587	LUCAS/TRW		
400 4-matic (292.356)	245	03/15 →				FCP4587	LUCAS/TRW		
450 AMG 4-matic (292.364)	270	03/15 → 04/16				FCP4587	LUCAS/TRW		
500 4-matic (292.373)	335	10/15 →				FCP4587	LUCAS/TRW		
AMG 43 4-matic (292.364)	270	05/16 →				FCP4587	LUCAS/TRW		
GLS (X166)									
350 d 4-matic (166.824)	190	11/15 →				FCP4587	LUCAS/TRW		
400 4-matic (166.856)	245	11/15 →				FCP4587	LUCAS/TRW		
450 4-matic (166.864)	270	06/16 →				FCP4587	LUCAS/TRW		
500 4-matic (166.871)	310	03/16 →				FCP4587	LUCAS/TRW		
500 4-matic (166.873)	335	11/15 →				FCP4587	LUCAS/TRW		

For material availability see page 16-18 / Per la disponibilità materiali vedere a pagina 16-18

FERODO RACING
Updated on November 2020

...MERCEDES	kW				NOTE			NOTE
M-CLASS (W163)								
2.7 CDi 20v	120	09/00 → 07/05	**FCP1661**	BREMBO				
3.2 18v	160	09/00 → 08/02	**FCP1661**	BREMBO				
3.7 18v	173	04/03 → 07/05	**FCP1661**	BREMBO				
3.7 18v	180	08/02 → 07/03	**FCP1661**	BREMBO				
4.0 CDi 32v	184	09/01 → 07/05	**FCP1661**	BREMBO				
4.3 24v	200	09/00 → 08/02	**FCP1661**	BREMBO				
5.0 24v	215	09/01 → 07/05	**FCP1661**	BREMBO				
M-CLASS (W164)								
ML 63 AMG 4-matic (164.177)	375	01/06 → 12/11				**FCP4413**	ATE	
M-CLASS (W166)								
ML 250 CDI / BlueTEC 4-matic (166.004, 166.003)	150	06/11 →				**FCP4587**	LUCAS/TRW	
ML 300 4-matic (166.055)	185	04/14 →				**FCP4587**	LUCAS/TRW	
ML 320 4-matic (166.062)	200	11/13 →				**FCP4587**	LUCAS/TRW	
ML 350 (166.058)	225	09/11 →				**FCP4587**	LUCAS/TRW	
ML 350 4-matic (166.057)	225	06/11 →				**FCP4587**	LUCAS/TRW	
ML 350 BlueTEC 4-matic (166.024)	190	06/11 →				**FCP4587**	LUCAS/TRW	
ML 350 CDI 4-matic	179	09/12 →				**FCP4587**	LUCAS/TRW	
ML 350 CDI 4-matic (166.023)	170	06/11 →				**FCP4587**	LUCAS/TRW	
ML 400 4-matic (166.056)	245	08/13 →				**FCP4587**	LUCAS/TRW	
ML 500 4-matic (166.073)	300	02/12 →				**FCP4587**	LUCAS/TRW	
ML 63 AMG 4-matic (166.074)	386	11/11 →	**FRP3133**	Brembo				
ML 63 AMG 4-matic (166.074)	386	11/11 →				**FCP4587**	LUCAS/TRW	
ML 63 AMG 4-matic (166.074)	410	11/11 →	**FRP3133**	Brembo				
ML 63 AMG 4-matic (166.074)	410	11/11 →				**FCP4587**	LUCAS/TRW	
ML55 AMG								
5.4 24v (W163)	255	06/99 → 07/05	**FCP1661**	BREMBO				
R-CLASS (W251, V251)								
R 63 AMG 4-matic (251.077, 251.177)	375	02/06 →				**FCP4413**	ATE	
S-CLASS (W220)								
2.8 18v	150	10/02 → 08/05	**FCP1661**	BREMBO				
3.2 CDi 24v	150	09/02 → 08/05	**FCP1661**	BREMBO				
3.7 18v	180	09/02 → 08/05	**FCP1661**	BREMBO				
4.0 CDi 32v	184	07/00 → 08/05	**FCP1661**	BREMBO				
4.0 CDi 32v	184	10/02 → 08/05	**FCP1661**	BREMBO				
4.0 CDi 32v	191	08/03 → 08/05	**FCP1661**	BREMBO				
4.3 24v	205	10/02 → 08/05	**FCP1661**	BREMBO				
5.0 24v	225	01/02 → 08/05	**FCP1661**	BREMBO				
S-CLASS (W221)								
S 63 AMG (221.074, 221.174)	400	03/11 → 12/13	**FCP4412**	ATE				
S 63 AMG (221.074, 221.174)	400	03/11 → 12/13				**FCP4413**	ATE	
S 63 AMG (221.074, 221.174)	420	02/12 → 12/13	**FCP4412**	ATE				
S 63 AMG (221.074, 221.174)	420	02/12 → 12/13				**FCP4413**	ATE	
S 63 AMG (221.077, 221.177)	386	10/06 → 12/13	**FCP4412**	ATE				
S 63 AMG (221.077, 221.177)	386	10/06 → 12/13				**FCP4413**	ATE	
S 65 AMG (221.179)	450	12/05 → 12/13	**FCP4412**	ATE				
S 65 AMG (221.179)	450	12/05 → 12/13				**FCP4413**	ATE	
S 65 AMG (221.179)	463	04/11 → 12/13	**FCP4412**	ATE				
S 65 AMG (221.179)	463	04/11 → 12/13				**FCP4413**	ATE	
S-CLASS (W222, V222, X222)								
AMG S 63 (222.187)	450	05/17 →				**FCP5108**		
AMG S 63 4-matic+ (222.188)	450	05/17 →				**FCP5108**		
S 63 AMG (222.077, 222.177)	430	05/13 →				**FCP5108**		
S 63 AMG 4-matic (222.178)	430	05/13 →				**FCP5108**		
S 65 AMG (222.179)	463	02/14 →				**FCP5108**		
S-CLASS 4-matic								
4.3 24v	205	09/02 → 08/05	**FCP1001**	ATE				
5.0 24v	225	09/02 → 08/05	**FCP1001**	ATE				
S-CLASS Convertible (A217)								
AMG S 63 (217.477)	430	02/16 →				**FCP5108**		
AMG S 63 4-matic (217.478)	430	12/15 →				**FCP5108**		
AMG S 63 4-matic+ (217.488)	450	10/17 →				**FCP5108**		
AMG S 65 (217.479)	463	04/16 →				**FCP5108**		
S 650 Maybach	463	08/17 →				**FCP5108**		

For material availability see page 16-18 / Per la disponibilità materiali vedere a pagina 16-18

...MERCEDES	kW				NOTE			NOTE
S-CLASS Coupe (C215)								
5.0 24v CL 500	225	01/02 → 08/05	**FCP1661**	BREMBO				
5.4 24v CL55 AMG	265	04/00 → 07/02	**FCP1661**	BREMBO				
S-CLASS Coupe (C216)								
CL 600	380	05/06 →	**FRP3133**	Brembo				
CL 63 AMG (216.374)	400	02/11 → 12/13	**FCP4412**	ATE				
CL 63 AMG (216.374)	400	02/11 → 12/13				**FCP4413**	ATE	
CL 63 AMG (216.374)	420	01/10 → 12/13	**FCP4412**	ATE				
CL 63 AMG (216.374)	420	01/10 → 12/13				**FCP4413**	ATE	
CL 63 AMG (216.377)	386	10/06 → 12/13	**FCP4412**	ATE				
CL 63 AMG (216.377)	386	10/06 → 12/13				**FCP4413**	ATE	
CL 65 AMG (216.379)	450	10/06 → 12/10	**FCP4412**	ATE				
CL 65 AMG (216.379)	450	10/06 → 12/10				**FCP4413**	ATE	
CL 65 AMG (216.379)	463	02/11 → 12/13	**FCP4412**	ATE				
CL 65 AMG (216.379)	463	02/11 → 12/13				**FCP4413**	ATE	
S-CLASS Coupe (C217)								
AMG S 63 4-matic+ (217.388)	450	10/17 →				**FCP5108**		
S 63 AMG (217.377)	430	07/14 →				**FCP5108**		
S 63 AMG 4-matic (217.378)	430	04/14 →				**FCP5108**		
S 65 AMG (217.379)	463	07/14 →				**FCP5108**		
S280								
2.8 18v (W220)	150	02/99 → 09/02	**FCP1661**	BREMBO				
S320								
3.2 18v (W220)	165	02/99 → 08/02	**FCP1661**	BREMBO				
3.2 CDi 24v (W220)	145	09/99 → 08/02	**FCP1661**	BREMBO				
S430								
4.3 24v (W220)	205	09/98 → 09/02	**FCP1661**	BREMBO				
S500								
5.0 24v (W220)	225	10/98 → 12/01	**FCP1661**	BREMBO				
S55 AMG								
5.4 24v (W220)	265	09/99 → 08/02	**FCP1661**	BREMBO				
S600								
5.8 36v (W220) Not for armoured vehicles	270	09/99 → 08/02	**FCP1661**	BREMBO				
SL (R230)								
3.0 24v without sports package	170	08/07 →	**FCP1661**	BREMBO				
3.0 24v without sports package	170	06/09 →				**FCP1568**	ATE	
3.5 24v without sports package	200	03/06 → 11/08	**FCP1661**	BREMBO				
3.5 24v without sports package	232	11/07 →	**FCP1661**	BREMBO				
3.7 18v	180	08/02 → 07/05	**FCP1661**	BREMBO				
5.0 24v	225	10/01 → 01/12	**FCP1661**	BREMBO				
55 AMG	380	03/06 → 01/12	**FRP3133**	Brembo				
600	380	12/06 → 01/12	**FRP3133**	Brembo	From Ch.No. 134505			
63 AMG	386	03/08 → 01/12	**FRP3133**	Brembo				
65 AMG	450	03/04 → 01/12	**FRP3133**	BREMBO	From Chassis:122821			
65 AMG Black Series	493	07/08 → 01/12	**FRP3133**	Brembo				
SL24								
3.0 (R129)		01/89 → 06/93	**FCP646**	ATE				
3.2 (R129)		01/89 → 06/93	**FCP646**	ATE				
SL280								
2.8 (R129)		07/93 → 08/94	**FCP646**	ATE				
SL300								
3.0 (R129)		01/89 → 06/93	**FCP646**	ATE				
SL320								
3.2 (R129)		07/93 → 05/98	**FCP646**	ATE				
SL500								
5.0 (R129)		01/89 → 06/93	**FCP646**	ATE				
5.0 (R129) 32V	235	07/93 → 05/98	**FCP646**	ATE				

For material availability see page 16-18 / Per la disponibilità materiali vedere a pagina 16-18

FERODO RACING
Updated on November 2020

	kW				NOTE			NOTE
...MERCEDES								
SL600								
6.0 (R129) 48V	290	07/93 →	FCP646	ATE				
SLC (R172)								
AMG SLC 43 (172.466)	270	01/16 →	FCP4806	BREMBO				
AMG SLC 43 (172.466)	270	01/16 →				FCP4587	LUCAS/TRW	
SLK (R170)								
3.2 18v AMG Kompressor	260	04/00 → 01/04	FCP1001	ATE				
3.2 V6	160	03/00 → 04/04	FCP1050	ATE				
SLK (R171)								
3.5 24v	200	06/04 → 01/06	FCP1661	BREMBO				
5.4 24v 55 AMG	265	04/08 →	FCP1661	BREMBO				
SLK (R172)								
55 AMG (172.475)	310	01/12 →	FCP4806	BREMBO				
55 AMG (172.475)	310	01/12 →				FCP4587	LUCAS/TRW	
55 AMG (172.475)	314	06/12 →	FCP4806	BREMBO				
55 AMG (172.475)	314	06/12 →				FCP4587	LUCAS/TRW	
SLK200								
2.0 Kompressor (R170) 16V	141	09/96 →	FCP1049	ATE				
SLK230								
2.3 Kompressor (R170) 16V	142	09/96 →	FCP1049	ATE				
SLS AMG (C197)								
6.2	420	03/10 →	FRP3133	Brembo				
MERCURY								
Merkur Scorpio								
		01/88 → 12/89	FCP408	LUCAS/TRW				
MG								
MG B								
1.8 GT	68	01/62 → 12/81	FCP823	LOCKHEED				
1.8 Not V8	59	01/62 → 12/81	FCP823	LOCKHEED				
1.8 V8		01/62 → 12/81	FCP823	LOCKHEED				
MG TF								
115	85	03/02 →	FRP3085	LOCKHEED				
120	88	03/02 →	FRP3085	LOCKHEED				
135	100	03/02 →	FRP3085	LOCKHEED				
160	118	03/02 →	FRP3085	LOCKHEED				
MG ZR								
1.4 i 105 16V	76	06/01 → 04/05	FCP613	LUCAS/TRW				
1.4 i 105 16V	76	06/01 → 04/05				FCP472	AKEBONO	
1.8 i 120 16V	86	06/01 → 04/05	FCP613	LUCAS/TRW				
1.8 i 120 16V	86	06/01 → 04/05				FCP472	AKEBONO	
1.8 i 160 16V	118	06/01 → 04/05				FCP956	NISSIN	
2.0 TDi 16V	74	06/01 → 04/05	FCP613	LUCAS/TRW				
2.0 TDi 16V	74	06/01 → 04/05				FCP472	AKEBONO	
MG ZS								
1.8 i 120 16V	86	07/01 → 04/05	FCP613	LUCAS/TRW				
1.8 i 120 16V	86	07/01 → 04/05				FCP472	AKEBONO	
2.5 i 180 16V	130	07/01 → 04/05				FCP956	NISSIN	
MGF (RD)								
1.8 i VVC	118	10/01 → 03/02	FRP3085	LOCKHEED				
MGR V8								
3.9 16V	140	10/92 → 12/95	FCP832	LOCKHEED				

For material availability see page 16-18 / Per la disponibilità materiali vedere a pagina 16-18



kW





MINI

	kW				NOTE			NOTE
MINI (F55)								
1.2 One	75	11/14 →	**FCP1747**	LUCAS/TRW				
1.2 One First	55	03/15 →	**FCP1747**	LUCAS/TRW				
1.5 Cooper	100	07/14 →	**FCP1747**	LUCAS/TRW				
1.5 Cooper D	85	07/14 →	**FCP1747**	LUCAS/TRW				
1.5 One D	70	11/14 →	**FCP1747**	LUCAS/TRW				
John Cooper Works	170	09/15 →	**FCP4872**	Brembo				
MINI (F56)								
1.2 One	75	03/14 →	**FCP1747**	LUCAS/TRW				
1.2 One First	55	06/14 →	**FCP1747**	LUCAS/TRW				
1.5 Cooper	100	12/13 →	**FCP1747**	LUCAS/TRW				
1.5 Cooper D	85	12/13 →	**FCP1747**	LUCAS/TRW				
1.5 One D	70	03/14 →	**FCP1747**	LUCAS/TRW				
John Cooper Works	170	06/14 →	**FCP4872**	Brembo				
MINI (R50)								
1.4 One - ATE Front	55	04/03 → 10/06	**FCP1499**	ATE				
1.4 One - ATE Front	55	04/03 → 10/06				**FCP1676**	ATE	
1.4 One - TRW Front	55	04/03 → 10/06	**FCP4080**	LUCAS/TRW				
1.4 One - TRW Front	55	04/03 → 10/06				**FCP1676**	ATE	
1.4 One D - ATE Front	55	04/03 → 09/05	**FCP1499**	ATE				
1.4 One D - ATE Front	55	04/03 → 09/05				**FCP1676**	ATE	
1.4 One D - ATE Front	65	06/03 → 09/05	**FCP1499**	ATE				
1.4 One D - ATE Front	65	06/03 → 09/05				**FCP1676**	ATE	
1.4 One D - TRW Front	55	04/03 → 09/05	**FCP4080**	LUCAS/TRW				
1.4 One D - TRW Front	55	04/03 → 09/05				**FCP1676**	ATE	
1.4 One D - TRW Front	65	06/03 → 09/05	**FCP4080**	LUCAS/TRW				
1.4 One D - TRW Front	65	06/03 → 09/05				**FCP1676**	ATE	
1.6 Cooper	85	04/01 → 12/08	**FCP1499**	ATE				
1.6 Cooper	85	04/01 → 12/08				**FCP1676**	ATE	
1.6 One	66	04/01 → 07/07	**FCP4080**	LUCAS/TRW				
1.6 One	66	04/01 → 07/07				**FCP1676**	ATE	
1.6 One - without sports package	66	04/01 → 07/07	**FCP1499**	ATE				
1.6 One - without sports package	66	04/01 → 07/07				**FCP1676**	ATE	
MINI (R50,R53)								
1.4 One D	55	06/03 → 02/07	**FCP1499**	ATE				
1.4 One D	55	06/03 → 02/07				**FCP1676**	ATE	
John Cooper works	160	03/06 → 09/06	**FCP1561**	Brembo				
John Cooper works	160	03/06 → 09/06	**FCP4080**	LUCAS/TRW				
John Cooper works	160	03/06 → 09/06				**FCP1676**	ATE	
John Cooper works	160	03/06 → 09/06				**FCP1975**	LUCAS/TRW	
Works	155	11/03 → 09/06	**FCP1499**	ATE				
Works	155	11/03 → 09/06	**FCP4080**	LUCAS/TRW				
Works	155	11/03 → 09/06				**FCP1676**	ATE	
MINI (R52)								
1.6 Cooper	85	01/02 → 01/09	**FCP1499**	ATE				
1.6 Cooper	85	01/02 → 01/09				**FCP1676**	ATE	
1.6 Cooper S	120	02/02 → 12/08	**FCP1499**	ATE				
1.6 Cooper S	120	02/02 → 12/08				**FCP1676**	ATE	
1.6 Cooper S	120	04/02 → 01/09	**FCP1499**	ATE				
1.6 Cooper S	120	04/02 → 01/09				**FCP1676**	ATE	
1.6 Cooper S	125	01/02 → 01/09	**FCP1499**	ATE				
1.6 Cooper S	125	01/02 → 01/09				**FCP1676**	ATE	
1.6 Cooper S Works	155	07/04 → 01/09	**FCP4080**	LUCAS/TRW				
1.6 Cooper S Works	155	07/04 → 01/09				**FCP1676**	ATE	
1.6 One	66	08/04 → 07/07	**FCP1499**	ATE				
1.6 One	66	08/04 → 07/07				**FCP1676**	ATE	
MINI (R53)								
1.6 Cooper S	125	05/04 → 10/06	**FCP1499**	ATE				
1.6 Cooper S	125	05/04 → 10/06				**FCP1676**	ATE	
1.6 Cooper S JCW GP	160	01/06 → 07/07	**FCP4080**	LUCAS/TRW				
1.6 Cooper S JCW GP	160	01/06 → 07/07				**FCP1676**	ATE	
1.6 Cooper S Works	147	11/03 → 06/05	**FCP4080**	LUCAS/TRW				
1.6 Cooper S Works	147	11/03 → 06/05				**FCP1676**	ATE	
1.6 Cooper S Works	155	07/05 → 10/06	**FCP4080**	LUCAS/TRW				
1.6 Cooper S Works	155	07/05 → 10/06				**FCP1676**	ATE	
MINI (R55)								
Clubman 1.4 One	70	03/09 → 02/10	**FCP1747**	LUCAS/TRW				
Clubman 1.4 One	70	03/09 → 02/10				**FCP1975**	LUCAS/TRW	
Clubman 1.4 One	72	03/10 →	**FCP1747**	LUCAS/TRW				
Clubman 1.4 One	72	03/10 →				**FCP1975**	LUCAS/TRW	
Clubman 1.6 Cooper	85	03/10 →	**FCP1561**	BREMBO				

For material availability see page 16-18 / Per la disponibilità materiali vedere a pagina 16-18

FERODO RACING

Updated on November 2020



kW

...MINI

...MINI (R55)

Clubman 1.6 Cooper	85	03/10 →	FCP1747	LUCAS/TRW		FCP1975	LUCAS/TRW	
Clubman 1.6 Cooper	85	03/10 →						
Clubman 1.6 Cooper	88	09/07 →	FCP1747	LUCAS/TRW		FCP1975	LUCAS/TRW	
Clubman 1.6 Cooper	88	09/07 →						
Clubman 1.6 Cooper	90	03/10 →	FCP1747	LUCAS/TRW		FCP1975	LUCAS/TRW	
Clubman 1.6 Cooper	90	03/10 →						
Clubman 1.6 Cooper D	80	10/07 →	FCP1747	LUCAS/TRW		FCP1975	LUCAS/TRW	
Clubman 1.6 Cooper D	80	10/07 →						
Clubman 1.6 Cooper D	82	03/10 →	FCP1747	LUCAS/TRW		FCP1975	LUCAS/TRW	
Clubman 1.6 Cooper D	82	03/10 →						
Clubman 1.6 Cooper S	120	10/07 →	FCP1561	BREMBO		FCP1975	LUCAS/TRW	
Clubman 1.6 Cooper S	120	10/07 →						
Clubman 1.6 Cooper S	128	01/07 →	FCP1561	BREMBO		FCP1975	LUCAS/TRW	
Clubman 1.6 Cooper S	128	01/07 →	FCP4080	LUCAS/TRW				
Clubman 1.6 Cooper S	128	01/07 →						
Clubman 1.6 Cooper S	135	03/10 →	FCP1561	BREMBO		FCP1975	LUCAS/TRW	
Clubman 1.6 Cooper S	135	03/10 →	FCP4080	LUCAS/TRW				
Clubman 1.6 Cooper S	135	03/10 →						
Clubman 1.6 One	72	03/10 →	FCP1747	LUCAS/TRW		FCP1975	LUCAS/TRW	
Clubman 1.6 One	72	03/10 →						
Clubman 1.6 One D	66	03/10 →	FCP1747	LUCAS/TRW		FCP1975	LUCAS/TRW	
Clubman 1.6 One D	66	03/10 →						
Clubman 1.6 S JCW	155	03/08 →	FCP1561	BREMBO		FCP1975	LUCAS/TRW	
Clubman 1.6 S JCW Tuning-Kit	147	03/10 →	FCP1561	BREMBO		FCP1975	LUCAS/TRW	
Clubman 1.6 S JCW Tuning-Kit	147	03/10 →						
Clubman 2.0 Cooper D	82	03/11 →	FCP1561	BREMBO		FCP1975	LUCAS/TRW	
Clubman 2.0 Cooper D	82	03/11 →	FCP1747	LUCAS/TRW				
Clubman 2.0 Cooper D	82	03/11 →						
Clubman 2.0 Cooper SD	100	02/11 →	FCP1561	BREMBO		FCP1975	LUCAS/TRW	
Clubman 2.0 Cooper SD	100	02/11 →	FCP1747	LUCAS/TRW				
Clubman 2.0 Cooper SD	100	02/11 →						
Clubman 2.0 Cooper SD	105	03/11 →	FCP1561	BREMBO		FCP1975	LUCAS/TRW	
Clubman 2.0 Cooper SD	105	03/11 →	FCP1747	LUCAS/TRW				
Clubman 2.0 Cooper SD	105	03/11 →						

MINI (R56)

1.4 One LPG	55	03/09 → 03/10	FCP1561	BREMBO		FCP1975	LUCAS/TRW	
1.4 One LPG	55	03/09 → 03/10						
1.4 One LPG - Front disc 280mm	55	03/09 → 03/10	FCP1747	LUCAS/TRW		FCP1975	LUCAS/TRW	
1.4 One LPG - Front disc 280mm	55	03/09 → 03/10						
1.4 One	55	03/09 → 03/10	FCP1561	BREMBO		FCP1975	LUCAS/TRW	
1.4 One	55	03/09 → 03/10						
1.4 One	70	11/06 → 03/10	FCP1747	LUCAS/TRW		FCP1975	LUCAS/TRW	
1.4 One	70	11/06 → 03/10	FCP1561	BREMBO				
1.4 One	70	11/06 → 03/10						
1.4 One - Front disc 280mm	55	03/09 → 03/10	FCP1747	LUCAS/TRW		FCP1975	LUCAS/TRW	
1.4 One - Front disc 280mm	55	03/09 → 03/10						
1.4 One - Front disc 294mm	55	03/09 → 03/10	FCP4080	LUCAS/TRW				
1.4 One - Front disc 294mm	55	03/09 → 03/10						
1.4 One - Front disc 294mm	70	11/06 → 03/10	FCP4080	LUCAS/TRW				
1.4 One - Front disc 294mm	70	11/06 → 03/10						
1.4 One LPG - Front disc 294mm	55	03/09 → 03/10	FCP4080	LUCAS/TRW				
1.4 One LPG - Front disc 294mm	55	03/09 → 03/10						
1.6 Cooper	85	03/10 →	FCP1561	BREMBO		FCP1975	LUCAS/TRW	
1.6 Cooper	85	03/10 →						
1.6 Cooper	88	11/06 → 08/10	FCP1561	BREMBO		FCP1975	LUCAS/TRW	
1.6 Cooper	88	11/06 → 08/10						
1.6 Cooper	90	03/10 →	FCP1561	BREMBO		FCP1975	LUCAS/TRW	
1.6 Cooper	90	03/10 →						
1.6 Cooper - Front disc 280mm	85	03/10 →	FCP1747	LUCAS/TRW		FCP1975	LUCAS/TRW	
1.6 Cooper - Front disc 280mm	85	03/10 →						
1.6 Cooper - Front disc 280mm	88	11/06 → 08/10	FCP1747	LUCAS/TRW				
1.6 Cooper - Front disc 280mm	90	03/10 →	FCP1747	LUCAS/TRW				
1.6 Cooper - Front disc 280mm	90	03/10 →						
1.6 Cooper - Front disc 294mm	85	03/10 →	FCP4080	LUCAS/TRW				
1.6 Cooper - Front disc 294mm	85	03/10 →						
1.6 Cooper - Front disc 294mm	88	11/06 → 08/10	FCP4080	LUCAS/TRW				
1.6 Cooper - Front disc 294mm	88	11/06 → 08/10						
1.6 Cooper - Front disc 294mm	90	03/10 →	FCP4080	LUCAS/TRW				
1.6 Cooper - Front disc 294mm	90	03/10 →						
1.6 Cooper D	80	11/06 → 09/10	FCP1561	BREMBO		FCP1975	LUCAS/TRW	
1.6 Cooper D	80	11/06 → 09/10						
1.6 Cooper D	82	06/10 →	FCP1561	BREMBO				
1.6 Cooper D	82	06/10 →						
1.6 Cooper D - Front disc 280mm	80	11/06 → 09/10	FCP1747	LUCAS/TRW		FCP1975	LUCAS/TRW	
1.6 Cooper D - Front disc 280mm	80	11/06 → 09/10						
1.6 Cooper D - Front disc 280mm	82	06/10 →	FCP1747	LUCAS/TRW				

For material availability see page 16-18 / Per la disponibilità materiali vedere a pagina 16-18

...MINI

...MINI (R56)

	kW				NOTE			NOTE
1.6 Cooper D - Front disc 280mm	82	06/10 →				FCP1975	LUCAS/TRW	
1.6 Cooper D - Front disc 294mm	80	11/06 → 09/10	FCP4080	LUCAS/TRW				
1.6 Cooper D - Front disc 294mm	80	11/06 → 09/10				FCP1975	LUCAS/TRW	
1.6 Cooper D - Front disc 294mm	82	06/10 →	FCP4080	LUCAS/TRW				
1.6 Cooper D - Front disc 294mm	82	06/10 →				FCP1975	LUCAS/TRW	
1.6 Cooper S	120	03/10 →	FCP1561	BREMBO				
1.6 Cooper S	120	03/10 →	FCP4080	LUCAS/TRW				
1.6 Cooper S	120	03/10 →				FCP1975	LUCAS/TRW	
1.6 Cooper S	128	11/06 → 02/10	FCP1561	BREMBO				
1.6 Cooper S	128	11/06 → 02/10	FCP4080	LUCAS/TRW				
1.6 Cooper S	128	11/06 → 02/10				FCP1975	LUCAS/TRW	
1.6 Cooper S	135	03/10 →	FCP1561	BREMBO				
1.6 Cooper S	135	03/10 →	FCP4080	LUCAS/TRW				
1.6 Cooper S	135	03/10 →				FCP1975	LUCAS/TRW	
1.6 Cooper S	135	03/10 →				FCP1975	LUCAS/TRW	
1.6 Cooper S JCW	155	01/09 →	FCP1561	BREMBO				
1.6 Cooper S JCW	155	01/09 →				FCP1975	LUCAS/TRW	
1.6 Cooper S JCW Tuning-Kit	147	01/12 →	FCP1561	BREMBO				
1.6 Cooper S JCW Tuning-Kit	147	01/12 →	FCP4080	LUCAS/TRW				
1.6 Cooper S JCW Tuning-Kit	147	01/12 →				FCP1975	LUCAS/TRW	
1.6 Cooper S JCW/S Works	155	03/08 →	FCP1561	BREMBO				
1.6 Cooper S JCW/S Works	155	03/08 →				FCP1975	LUCAS/TRW	
1.6 One	55	03/10 →	FCP1561	BREMBO				
1.6 One	55	03/10 →				FCP1975	LUCAS/TRW	
1.6 One	72	03/10 →	FCP1561	BREMBO				
1.6 One	72	03/10 →				FCP1975	LUCAS/TRW	
1.6 One - Front disc 280mm	55	03/10 →	FCP1747	LUCAS/TRW				
1.6 One - Front disc 280mm	55	03/10 →				FCP1975	LUCAS/TRW	
1.6 One - Front disc 280mm	72	03/10 →	FCP1747	LUCAS/TRW				
1.6 One - Front disc 280mm	72	03/10 →				FCP1975	LUCAS/TRW	
1.6 One - Front disc 294mm	55	03/10 →	FCP4080	LUCAS/TRW				
1.6 One - Front disc 294mm	55	03/10 →				FCP1975	LUCAS/TRW	
1.6 One - Front disc 294mm	72	03/10 →	FCP4080	LUCAS/TRW				
1.6 One - Front disc 294mm	72	03/10 →				FCP1975	LUCAS/TRW	
1.6 One D	66	06/09 → 07/10	FCP1561	BREMBO				
1.6 One D	66	06/09 → 07/10				FCP1975	LUCAS/TRW	
1.6 One D	66	07/10 →	FCP1561	BREMBO				
1.6 One D	66	07/10 →				FCP1975	LUCAS/TRW	
1.6 One D - Front disc 280mm	66	06/09 → 07/10	FCP1747	LUCAS/TRW				
1.6 One D - Front disc 280mm	66	06/09 → 07/10				FCP1975	LUCAS/TRW	
1.6 One D - Front disc 280mm	66	07/10 →	FCP1747	LUCAS/TRW				
1.6 One D - Front disc 280mm	66	07/10 →				FCP1975	LUCAS/TRW	
1.6 One D - Front disc 294mm	66	06/09 → 07/10	FCP4080	LUCAS/TRW				
1.6 One D - Front disc 294mm	66	06/09 → 07/10				FCP1975	LUCAS/TRW	
1.6 One D - Front disc 294mm	66	07/10 →	FCP4080	LUCAS/TRW				
1.6 One D - Front disc 294mm	66	07/10 →				FCP1975	LUCAS/TRW	
2.0 Cooper D	82	03/11 →	FCP1561	BREMBO				
2.0 Cooper D	82	03/11 →				FCP1975	LUCAS/TRW	
2.0 Cooper D - Front disc 280mm	82	03/11 →	FCP1747	LUCAS/TRW				
2.0 Cooper D - Front disc 280mm	82	03/11 →				FCP1975	LUCAS/TRW	
2.0 Cooper D - Front disc 294mm	82	03/11 →	FCP4080	LUCAS/TRW				
2.0 Cooper D - Front disc 294mm	82	03/11 →				FCP1975	LUCAS/TRW	
2.0 Cooper SD	100	02/11 →	FCP1561	BREMBO				
2.0 Cooper SD	100	02/11 →				FCP1975	LUCAS/TRW	
2.0 Cooper SD	105	03/11 →	FCP1561	BREMBO				
2.0 Cooper SD	105	03/11 →				FCP1975	LUCAS/TRW	
2.0 Cooper SD - Front disc 280mm	100	02/11 →	FCP1747	LUCAS/TRW				
2.0 Cooper SD - Front disc 280mm	100	02/11 →				FCP1975	LUCAS/TRW	
2.0 Cooper SD - Front disc 280mm	105	03/11 →	FCP1747	LUCAS/TRW				
2.0 Cooper SD - Front disc 280mm	105	03/11 →				FCP1975	LUCAS/TRW	
2.0 Cooper SD - Front disc 294mm	100	02/11 →	FCP4080	LUCAS/TRW				
2.0 Cooper SD - Front disc 294mm	100	02/11 →				FCP1975	LUCAS/TRW	
2.0 Cooper SD - Front disc 294mm	105	03/11 →	FCP4080	LUCAS/TRW				
2.0 Cooper SD - Front disc 294mm	105	03/11 →				FCP1975	LUCAS/TRW	
Cooper	88	10/06 → 02/12	FCP1561	Brembo				
Cooper	88	10/06 → 02/12	FCP1747	LUCAS/TRW				
Cooper	88	10/06 → 02/12	FCP4080	LUCAS/TRW				
Cooper	88	10/06 → 02/12				FCP1975	LUCAS/TRW	
Cooper D	80	11/06 → 09/10	FCP1561	Brembo				
Cooper D	80	11/06 → 09/10	FCP1747	LUCAS/TRW				
Cooper D	80	11/06 → 09/10	FCP4080	LUCAS/TRW				
Cooper D	80	11/06 → 09/10				FCP1975	LUCAS/TRW	
Cooper S	128	10/06 → 01/11	FCP1561	Brembo				
Cooper S	128	10/06 → 01/11	FCP4080	LUCAS/TRW				
Cooper S	128	10/06 → 01/11				FCP1975	LUCAS/TRW	
John Cooper Works	141	11/06 → 12/11	FCP1561	Brembo				
John Cooper Works	141	11/06 → 12/11				FCP1975	LUCAS/TRW	
John Cooper Works GP	160	01/12 → 12/13	FCP4218	BREMBO				

For material availability see page 16-18 / Per la disponibilità materiali vedere a pagina 16-18

...MINI

...MINI (R56)

	kW				NOTE			NOTE
John Cooper Works GP	160	01/12 → 12/13	FCP4080	LUCAS/TRW				
John Cooper Works GP	160	01/12 → 12/13				FCP1676	TEVES	
John Cooper Works GP	160	01/12 → 12/13				FCP1975	LUCAS/TRW	
One	70	11/06 → 03/10	FCP1561	Brembo				
One	70	11/06 → 03/10	FCP1747	LUCAS/TRW				
One	70	11/06 → 03/10	FCP4080	LUCAS/TRW				
One	70	11/06 → 03/10				FCP1975	LUCAS/TRW	

MINI (R57)

1.6 Cooper	85	03/09 →	FCP1747	LUCAS/TRW				
1.6 Cooper	85	03/09 →				FCP1975	LUCAS/TRW	
1.6 Cooper	88	03/09 →	FCP1561	BREMBO				
1.6 Cooper	88	03/09 →				FCP1975	LUCAS/TRW	
1.6 Cooper	90	03/10 →	FCP1561	BREMBO				
1.6 Cooper	90	03/10 →				FCP1975	LUCAS/TRW	
1.6 Cooper - Front disc 280mm	88	03/09 →	FCP1747	LUCAS/TRW				
1.6 Cooper - Front disc 280mm	88	03/09 →				FCP1975	LUCAS/TRW	
1.6 Cooper - Front disc 280mm	90	03/10 →	FCP1747	LUCAS/TRW				
1.6 Cooper - Front disc 280mm	90	03/10 →				FCP1975	LUCAS/TRW	
1.6 Cooper - Front disc 294mm	88	03/09 →	FCP4080	LUCAS/TRW				
1.6 Cooper - Front disc 294mm	88	03/09 →				FCP1975	LUCAS/TRW	
1.6 Cooper - Front disc 294mm	90	03/10 →	FCP4080	LUCAS/TRW				
1.6 Cooper - Front disc 294mm	90	03/10 →				FCP1975	LUCAS/TRW	
1.6 Cooper S	120	03/10 →	FCP1561	BREMBO				
1.6 Cooper S	120	03/10 →	FCP4080	LUCAS/TRW				
1.6 Cooper S	120	03/10 →				FCP1975	LUCAS/TRW	
1.6 Cooper S	128	03/09 →	FCP1561	BREMBO				
1.6 Cooper S	128	03/09 →	FCP4080	LUCAS/TRW				
1.6 Cooper S	128	03/09 →				FCP1975	LUCAS/TRW	
1.6 Cooper S	135	03/10 →	FCP1561	BREMBO				
1.6 Cooper S	135	03/10 →	FCP4080	LUCAS/TRW				
1.6 Cooper S	135	03/10 →				FCP1975	LUCAS/TRW	
1.6 Cooper S	135	03/10 →				FCP1975	LUCAS/TRW	
1.6 Cooper S JCW	155	03/08 →	FCP1561	BREMBO				
1.6 Cooper S JCW	155	03/08 →				FCP1975	LUCAS/TRW	
1.6 Cooper S JCW Tuning-Kit	147	03/10 →	FCP1561	BREMBO				
1.6 Cooper S JCW Tuning-Kit	147	03/10 →	FCP4080	LUCAS/TRW				
1.6 Cooper S JCW Tuning-Kit	147	03/10 →				FCP1975	LUCAS/TRW	
1.6 D Cooper	82	06/10 →	FCP1561	BREMBO				
1.6 D Cooper	82	06/10 →				FCP1975	LUCAS/TRW	
1.6 D Cooper - Front disc 280mm	82	06/10 →	FCP1747	LUCAS/TRW				
1.6 D Cooper - Front disc 280mm	82	06/10 →				FCP1975	LUCAS/TRW	
1.6 D Cooper - Front disc 294mm	82	06/10 →	FCP4080	LUCAS/TRW				
1.6 D Cooper - Front disc 294mm	82	06/10 →				FCP1975	LUCAS/TRW	
1.6 One	72	03/10 →	FCP1561	BREMBO				
1.6 One	72	03/10 →				FCP1975	LUCAS/TRW	
1.6 One - Front disc 280mm	72	03/10 →	FCP1747	LUCAS/TRW				
1.6 One - Front disc 280mm	72	03/10 →				FCP1975	LUCAS/TRW	
1.6 One - Front disc 294mm	72	03/10 →	FCP4080	LUCAS/TRW				
1.6 One - Front disc 294mm	72	03/10 →				FCP1975	LUCAS/TRW	
2.0 Cooper D	82	03/11 →	FCP1561	BREMBO				
2.0 Cooper D	82	03/11 →				FCP1975	LUCAS/TRW	
2.0 Cooper D - Front disc 280mm	82	03/11 →	FCP1747	LUCAS/TRW				
2.0 Cooper D - Front disc 280mm	82	03/11 →				FCP1975	LUCAS/TRW	
2.0 Cooper D - Front disc 294mm	82	03/11 →	FCP4080	LUCAS/TRW				
2.0 Cooper D - Front disc 294mm	82	03/11 →				FCP1975	LUCAS/TRW	
2.0 Cooper SD	100	03/11 →	FCP1561	BREMBO				
2.0 Cooper SD	100	03/11 →				FCP1975	LUCAS/TRW	
2.0 Cooper SD	105	03/11 →	FCP1561	BREMBO				
2.0 Cooper SD	105	03/11 →				FCP1975	LUCAS/TRW	
2.0 Cooper SD - Front disc 280mm	100	03/11 →	FCP1747	LUCAS/TRW				
2.0 Cooper SD - Front disc 280mm	100	03/11 →				FCP1975	LUCAS/TRW	
2.0 Cooper SD - Front disc 280mm	105	03/11 →	FCP1747	LUCAS/TRW				
2.0 Cooper SD - Front disc 280mm	105	03/11 →				FCP1975	LUCAS/TRW	
2.0 Cooper SD - Front disc 294mm	100	03/11 →	FCP4080	LUCAS/TRW				
2.0 Cooper SD - Front disc 294mm	100	03/11 →				FCP1975	LUCAS/TRW	
2.0 Cooper SD - Front disc 294mm	105	03/11 →	FCP4080	LUCAS/TRW				
2.0 Cooper SD - Front disc 294mm	105	03/11 →				FCP1975	LUCAS/TRW	

MINI CLUBMAN (F54)

John Cooper Works	170	11/15 →	FCP4872	Brembo				
One	75	02/15 →	FCP1747	LUCAS/TRW				
One D	85	02/15 →	FCP1747	LUCAS/TRW				

For material availability see page 16-18 / Per la disponibilità materiali vedere a pagina 16-18

...MINI	kW				NOTE			NOTE
MINI CLUBMAN (R55)								
John Cooper Works	141	10/08 → 02/10	**FCP4080**	LUCAS/TRW				
John Cooper Works	141	10/08 → 02/10				**FCP1975**	LUCAS/TRW	
MINI CLUBVAN (R55)								
Cooper	90	12/12 →	**FCP1561**	Brembo				
Cooper	90	12/12 →	**FCP1747**	LUCAS/TRW				
Cooper	90	12/12 →				**FCP1975**	LUCAS/TRW	
Cooper D	82	12/12 →	**FCP1561**	Brembo				
Cooper D	82	12/12 →	**FCP1747**	LUCAS/TRW				
Cooper D	82	12/12 →				**FCP1975**	LUCAS/TRW	
Cooper D	82	12/12 →	**FCP1747**	LUCAS/TRW				
Cooper D	82	12/12 →				**FCP1975**	LUCAS/TRW	
One	72	12/12 →	**FCP1561**	Brembo				
One	72	12/12 →	**FCP1747**	LUCAS/TRW				
One	72	12/12 →				**FCP1975**	LUCAS/TRW	
MINI Convertible (F57)								
Cooper	100	11/14 →	**FCP1747**	LUCAS/TRW				
Cooper D	85	12/14 →	**FCP1747**	LUCAS/TRW				
John Cooper Works	170	05/15 →	**FCP4872**	Brembo				
One	75	06/15 →	**FCP1747**	LUCAS/TRW				
MINI Convertible (R57)								
Cooper S	125	11/07 → 12/08	**FCP1561**	Brembo				
Cooper S	125	11/07 → 12/08	**FCP4080**	LUCAS/TRW				
Cooper S	125	11/07 → 12/08				**FCP1975**	LUCAS/TRW	
One	72	03/10 → 06/15	**FCP1561**	Brembo				
One	72	03/10 → 06/15	**FCP1747**	LUCAS/TRW				
One	72	03/10 → 06/15	**FCP4080**	LUCAS/TRW				
One	72	03/10 → 06/15				**FCP1975**	LUCAS/TRW	
MINI COUNTRYMAN (R60)								
1.6 Cooper	85	06/10 →	**FCP4080**	LUCAS/TRW				
1.6 Cooper	85	06/10 →				**FCP1806**	LUCAS/TRW	
1.6 Cooper	90	06/10 →	**FCP4080**	LUCAS/TRW				
1.6 Cooper	90	06/10 →				**FCP1806**	LUCAS/TRW	
1.6 Cooper D	82	06/10 →	**FCP4080**	LUCAS/TRW				
1.6 Cooper D	82	06/10 →				**FCP1806**	LUCAS/TRW	
1.6 Cooper DX	82	06/10 →	**FCP4080**	LUCAS/TRW				
1.6 Cooper DX	82	06/10 →				**FCP1806**	LUCAS/TRW	
1.6 Cooper S	120	06/10 →	**FCP4080**	LUCAS/TRW				
1.6 Cooper S	120	06/10 →				**FCP1806**	LUCAS/TRW	
1.6 Cooper S	135	06/10 →	**FCP4080**	LUCAS/TRW				
1.6 Cooper S	135	06/10 →				**FCP1806**	LUCAS/TRW	
1.6 Cooper S/Cooper SX	135	06/10 →	**FCP4080**	LUCAS/TRW				
1.6 Cooper S/Cooper SX	135	06/10 →				**FCP1806**	LUCAS/TRW	
1.6 Cooper SX	120	06/10 →	**FCP4080**	LUCAS/TRW				
1.6 Cooper SX	120	06/10 →				**FCP1806**	LUCAS/TRW	
1.6 One	72	06/10 →	**FCP4080**	LUCAS/TRW				
1.6 One	72	06/10 →				**FCP1806**	LUCAS/TRW	
1.6 One D	66	06/10 →	**FCP4080**	LUCAS/TRW				
1.6 One D	66	06/10 →				**FCP1806**	LUCAS/TRW	
1.6 S JCW	160	06/12 →	**FCP4080**	LUCAS/TRW				
1.6 S JCW	160	06/12 →				**FCP1806**	LUCAS/TRW	
1.6 S JCW Tuning-Kit	147	02/12 →	**FCP4080**	LUCAS/TRW				
1.6 S JCW Tuning-Kit	147	02/12 →				**FCP1806**	LUCAS/TRW	
2.0 Cooper D	82	03/11 →	**FCP4080**	LUCAS/TRW				
2.0 Cooper D	82	03/11 →				**FCP1806**	LUCAS/TRW	
2.0 Cooper DX	82	03/11 →	**FCP4080**	LUCAS/TRW				
2.0 Cooper DX	82	03/11 →				**FCP1806**	LUCAS/TRW	
2.0 Cooper SD	100	03/11 →	**FCP4080**	LUCAS/TRW				
2.0 Cooper SD	100	03/11 →				**FCP1806**	LUCAS/TRW	
2.0 Cooper SD	105	03/11 →	**FCP4080**	LUCAS/TRW				
2.0 Cooper SD	105	03/11 →				**FCP1806**	LUCAS/TRW	
2.0 Cooper SDX	100	02/11 →	**FCP4080**	LUCAS/TRW				
2.0 Cooper SDX	100	02/11 →				**FCP1806**	LUCAS/TRW	
2.0 Cooper SDX	105	03/11 →	**FCP4080**	LUCAS/TRW				
2.0 Cooper SDX	105	03/11 →				**FCP1806**	LUCAS/TRW	
Cooper	88	09/10 →	**FCP4080**	LUCAS/TRW				
Cooper	88	09/10 →				**FCP1806**	LUCAS/TRW	
Cooper ALL4	90	11/12 →	**FCP4080**	LUCAS/TRW				
Cooper ALL4	90	11/12 →	**FCP4080**	LUCAS/TRW				
Cooper ALL4	90	11/12 →				**FCP1806**	LUCAS/TRW	
Cooper ALL4	90	11/12 →				**FCP1806**	LUCAS/TRW	
Cooper S	140	07/14 →	**FCP4080**	LUCAS/TRW				
Cooper S	140	07/14 →				**FCP1806**	LUCAS/TRW	
Cooper S ALL4	140	07/14 →	**FCP4080**	LUCAS/TRW				

For material availability see page 16-18 / Per la disponibilità materiali vedere a pagina 16-18

FERODO RACING
Updated on November 2020



kW

...MINI

					NOTE			NOTE
...MINI COUNTRYMAN (R60)								
Cooper S ALL4	140	07/14 →				FCP1806	LUCAS/TRW	
John Cooper Works ALL4	155	09/12 →	FCP4080	LUCAS/TRW				
John Cooper Works ALL4	155	09/12 →				FCP1806	LUCAS/TRW	
MINI Coupe (R58)								
1.6 Cooper	85	09/11 →	FCP1561	BREMBO				
1.6 Cooper	85	09/11 →	FCP1747	LUCAS/TRW				
1.6 Cooper	85	09/11 →				FCP1975	LUCAS/TRW	
1.6 Cooper	90	09/11 →	FCP1747	LUCAS/TRW				
1.6 Cooper	90	09/11 →				FCP1975	LUCAS/TRW	
1.6 Cooper S	120	09/11 →	FCP4080	LUCAS/TRW				
1.6 Cooper S	120	09/11 →				FCP1975	LUCAS/TRW	
1.6 Cooper S	135	09/11 →	FCP4080	LUCAS/TRW				
1.6 Cooper S	135	09/11 →				FCP1975	LUCAS/TRW	
1.6 Cooper S JCW	155	09/11 →	FCP1561	BREMBO				
1.6 Cooper S JCW	155	09/11 →				FCP1975	LUCAS/TRW	
1.6 S JCW Tuning-Kit	147	09/11 →	FCP4080	LUCAS/TRW				
1.6 S JCW Tuning-Kit	147	09/11 →				FCP1975	LUCAS/TRW	
2.0 Cooper SD	100	09/11 →	FCP1561	BREMBO				
2.0 Cooper SD	100	09/11 →	FCP1747	LUCAS/TRW				
2.0 Cooper SD	100	09/11 →				FCP1975	LUCAS/TRW	
2.0 Cooper SD	105	09/11 →	FCP1747	LUCAS/TRW				
2.0 Cooper SD	105	09/11 →				FCP1975	LUCAS/TRW	
John Cooper Works	170	09/15 →	FCP1561	Brembo				
John Cooper Works	170	09/15 →				FCP1975	LUCAS/TRW	
MINI PACEMAN (R61)								
1.6 Cooper	90	01/13 →	FCP4080	LUCAS/TRW				
1.6 Cooper	90	01/13 →				FCP1806	LUCAS/TRW	
1.6 Cooper D	82	01/13 →	FCP4080	LUCAS/TRW				
1.6 Cooper D	82	01/13 →				FCP1806	LUCAS/TRW	
1.6 Cooper DX	82	01/13 →	FCP4080	LUCAS/TRW				
1.6 Cooper DX	82	01/13 →				FCP1806	LUCAS/TRW	
1.6 Cooper S	135	01/13 →	FCP4080	LUCAS/TRW				
1.6 Cooper S	135	01/13 →				FCP1806	LUCAS/TRW	
1.6 Cooper SX	135	01/13 →	FCP4080	LUCAS/TRW				
1.6 Cooper SX	135	01/13 →				FCP1806	LUCAS/TRW	
1.6 Cooper SX JCW	160	01/13 →	FCP4080	LUCAS/TRW				
1.6 Cooper SX JCW	160	01/13 →				FCP1806	LUCAS/TRW	
2.0 Cooper SD	105	01/13 →	FCP4080	LUCAS/TRW				
2.0 Cooper SD	105	01/13 →				FCP1806	LUCAS/TRW	
2.0 Cooper SDX	105	01/13 →	FCP4080	LUCAS/TRW				
2.0 Cooper SDX	105	01/13 →				FCP1806	LUCAS/TRW	
Cooper	88	05/13 →	FCP4080	LUCAS/TRW				
Cooper	88	05/13 →				FCP1806	LUCAS/TRW	
Cooper ALL4	90	07/14 →	FCP4080	LUCAS/TRW				
Cooper ALL4	90	07/14 →				FCP1806	LUCAS/TRW	
Cooper ALL4	90	11/14 →	FCP4080	LUCAS/TRW				
Cooper ALL4	90	11/14 →				FCP1806	LUCAS/TRW	
Cooper D	82	09/12 →	FCP4080	LUCAS/TRW				
Cooper D	82	09/12 →				FCP1806	LUCAS/TRW	
Cooper D ALL4	82	09/12 →	FCP4080	LUCAS/TRW				
Cooper D ALL4	82	09/12 →				FCP1806	LUCAS/TRW	
Cooper S	140	07/14 →	FCP4080	LUCAS/TRW				
Cooper S	140	07/14 →				FCP1806	LUCAS/TRW	
Cooper S ALL4	120	04/12 →	FCP4080	LUCAS/TRW				
Cooper S ALL4	120	04/12 →				FCP1806	LUCAS/TRW	
Cooper S ALL4	140	07/14 →	FCP4080	LUCAS/TRW				
Cooper S ALL4	140	07/14 →				FCP1806	LUCAS/TRW	
Cooper SD ALL4	100	10/12 →	FCP4080	LUCAS/TRW				
Cooper SD ALL4	100	10/12 →				FCP1806	LUCAS/TRW	
John Cooper Works	155	09/12 →	FCP4080	LUCAS/TRW				
John Cooper Works	155	09/12 →				FCP1806	LUCAS/TRW	
MINI Roadster (R59)								
1.6 Cooper	85	02/12 →	FCP1561	BREMBO				
1.6 Cooper	85	02/12 →	FCP4080	LUCAS/TRW				
1.6 Cooper	85	02/12 →				FCP1975	LUCAS/TRW	
1.6 Cooper	90	02/12 →	FCP1561	BREMBO				
1.6 Cooper	90	02/12 →	FCP4080	LUCAS/TRW				
1.6 Cooper	90	02/12 →				FCP1975	LUCAS/TRW	
1.6 Cooper S	120	02/12 →	FCP1561	BREMBO				
1.6 Cooper S	120	02/12 →	FCP4080	LUCAS/TRW				
1.6 Cooper S	120	02/12 →				FCP1975	LUCAS/TRW	
1.6 Cooper S	135	02/12 →	FCP1561	BREMBO				
1.6 Cooper S	135	02/12 →	FCP4080	LUCAS/TRW				
1.6 Cooper S	135	02/12 →				FCP1975	LUCAS/TRW	

For material availability see page 16-18 / Per la disponibilità materiali vedere a pagina 16-18



	kW				NOTE			NOTE
...MINI								
...MINI Roadster (R59)								
1.6 Cooper S JCW	155	02/12 →	**FCP1561**	BREMBO				
1.6 Cooper S JCW	155	02/12 →				**FCP1975**	LUCAS/TRW	
1.6 S JCW Tuning-Kit	147	02/12 →	**FCP4080**	LUCAS/TRW				
1.6 S JCW Tuning-Kit	147	02/12 →				**FCP1975**	LUCAS/TRW	
2.0 Cooper SD	100	02/12 →	**FCP1561**	BREMBO				
2.0 Cooper SD	100	02/12 →	**FCP1747**	LUCAS/TRW				
2.0 Cooper SD	100	02/12 →				**FCP1975**	LUCAS/TRW	
2.0 Cooper SD	105	02/12 →	**FCP1561**	BREMBO				
2.0 Cooper SD	105	02/12 →	**FCP1747**	LUCAS/TRW				
2.0 Cooper SD	105	02/12 →				**FCP1975**	LUCAS/TRW	
MITSUBISHI								
3000 GT, GTO								
3.0 (Turbo) Z16A 24V	210	08/92 → 04/96	**FCP765**	AKEBONO				
Carisma								
1.9 TDi DA4A	66	01/97 →	**FCP1093**	LUCAS/TRW				
CARISMA (DA_)								
1.8 (DA2A)	85	07/95 → 07/97	**FCP1093**	LUCAS/TRW				
1.8 16V GDI (DA2A)	92	09/97 → 06/06	**FCP1093**	LUCAS/TRW				
1.8 MSX - 16V (DA2A)	103	07/95 → 07/97	**FCP1093**	LUCAS/TRW				
CARISMA Saloon (DA_)								
1.8 (DA2A)	85	09/96 → 09/97	**FCP1093**	LUCAS/TRW				
1.8 16V GDI (DA2A)	92	09/97 → 06/06	**FCP1093**	LUCAS/TRW				
Galant								
2.0		05/90 → 12/92	**FCP765**	AKEBONO				
2.5 24V	125	01/93 → 03/97	**FCP765**	AKEBONO				
L200								
1.6 i L021P		01/79 → 10/86	**FCP170**	SUMITOMO				
2.5 D	51	08/93 → 08/96	**FCP765**	AKEBONO				
2.5 TD	64, 73	08/93 → 08/96	**FCP765**	AKEBONO				
Lancer								
1.6 i 16V	72	09/03 →	**FCP765**	AKEBONO				
2.0 Evo III		01/95 → 12/95	**FCP765**	AKEBONO				
2.0 Evo III		01/95 → 12/95				**FCP1283**	AKEBONO	
2.0 Evo IV		01/96 → 12/96	**FCP765**	AKEBONO				
2.0 Evo IV		01/96 → 12/96				**FCP1280**	AKEBONO	
2.0 Evo IX		01/05 → 11/07	**FCP1334**	BREMBO				
2.0 Evo IX		01/05 → 11/07				**FCP1562**	BREMBO	
2.0 Evo V		01/97 → 12/98	**FCP1334**	BREMBO				
2.0 Evo V		01/97 → 12/98				**FCP1562**	BREMBO	
2.0 Evo VI / Evo VII	206	01/99 →	**FCP1334**	BREMBO				
2.0 Evo VI / Evo VII	206	01/99 →	**FCP1562**	ATE				
2.0 Evo VI / Evo VII	206	01/99 →				**FCP1562**	BREMBO	
2.0 Evo VI / Evo VII - gravel	206	01/99 →	**FCP765**	AKEBONO				
2.0 Evo VI / Evo VII - gravel	206	01/99 →				**FCP1280**	AKEBONO	
2.0 Evo VI / Evo VII - tarmac	206	01/99 →	**FCP1334**	BREMBO				
2.0 Evo VI / Evo VII - tarmac	206	01/99 →				**FCP1562**	BREMBO	
2.0 Evo VIII	195	03/04 →	**FCP1334**	BREMBO				
2.0 Evo VIII	195	03/04 →				**FCP1562**	BREMBO	
2.0 Evo VIII - Alcon FQ400	195	03/04 →	**FRP3081**	ALCON				
2.0 Evo VIII - Alcon FQ400	195	03/04 →				**FRP3082**	ALCON	
2.0i 16V	99	12/03 →	**FCP765**	AKEBONO				
EVO IX-X Gr.N Asphalt	206	01/06 →	**FRP3088**	BREMBO				
EVO IX-X Gr.N Asphalt	206	01/06 →				**FRP308**	BREMBO	
EVO IX-X Gr.N Gravel	206	01/06 →	**FRP3087**	BREMBO				
EVO IX-X Gr.N Gravel	206	01/06 →				**FRP308**	BREMBO	
Ralliart	174	01/09 →	**FCP765**	AKEBONO				
LANCER Saloon (CY/Z_A)								
2.0 EVO X	221	06/08 →	**FCP1334**	BREMBO				
2.0 EVO X	221	06/08 →				**FCP4168**	BREMBO	

For material availability see page 16-18 / Per la disponibilità materiali vedere a pagina 16-18



kW

...MITSUBISHI

					NOTE			NOTE
Montero								
2.3 L034, L048		01/84 → 09/86	**FCP170**	SUMITOMO				
2.4 16V	82	04/91 → 08/94	**FCP765**	AKEBONO				
2.4 16V	82	04/91 → 08/94				**FCP1280**	AKEBONO	
2.5 TD	62	01/83 → 12/87	**FCP170**	SUMITOMO				
2.5 TD V24, V44	73	04/91 → 10/97	**FCP765**	AKEBONO				
2.5 TD V24, V44	73	04/91 → 10/97				**FCP1280**	AKEBONO	
2.8 TD V46 LWB	92	03/94 →	**FCP765**	AKEBONO				
2.8 V24, V44		04/91 → 10/97	**FCP765**	AKEBONO				
2.8 V24, V44		04/91 → 10/97				**FCP1280**	AKEBONO	
3.0 TD V23		04/91 → 10/97	**FCP765**	AKEBONO				
3.0 TD V23		04/91 → 10/97				**FCP1280**	AKEBONO	
3.5 V25, V45 24V	143, 153	04/94 → 10/97	**FCP765**	AKEBONO				
Montero Sport								
2.5 D	73	11/98 →	**FCP765**	AKEBONO				
3.0 i 24V	130	11/98 →	**FCP765**	AKEBONO				
Outlander								
2.0 i 4WD 16v	100	05/03 →	**FCP765**	AKEBONO				
2.0 i Turbo 4WD 16v	148	04/04 →	**FCP765**	AKEBONO				
2.4 i 4WD 16v	118	11/03 →	**FCP765**	AKEBONO				
Pajero								
2.3 TD L043	62	01/84 → 09/86	**FCP170**	SUMITOMO				
2.3 TD L048	62	01/84 → 09/86	**FCP170**	SUMITOMO				
2.4 (V21, 41) (II)	82	04/91 → 08/94	**FCP765**	AKEBONO				
2.4 (V21, 41) (II)	82	04/91 → 08/94				**FCP1280**	AKEBONO	
2.5 TD L044G	62	01/82 → 12/87	**FCP170**	SUMITOMO				
2.5 TD L049GW	62	01/82 → 12/87	**FCP170**	SUMITOMO				
2.5 TD V24, V44	73	04/91 →	**FCP765**	AKEBONO				
2.5 TD V24, V44	73	04/91 →				**FCP1280**	AKEBONO	
2.8 TD V46 LWB	92	01/93 → 12/00	**FCP765**	AKEBONO				
2.8 V24, V44		04/91 →	**FCP765**	AKEBONO				
2.8 V24, V44		04/91 →				**FCP1280**	AKEBONO	
3.0 TD V6 (V23, 43) (II)		04/91 →	**FCP765**	AKEBONO				
3.0 TD V6 (V23, 43) (II)		04/91 →				**FCP1280**	AKEBONO	
3.5 V25, V45 24V	143, 153	04/94 → 12/00	**FCP765**	AKEBONO				
PAJERO IV (V8_W, V9_W)								
3.2 DI-D (V88W, V98W)	118	02/07 →	**FCP1698**	SUMITOMO				
3.2 DI-D (V88W, V98W)	118	02/07 →				**FCP1021**	SUMITOMO	
3.2 DI-D (V88W, V98W)	125	02/07 →	**FCP1698**	SUMITOMO				
3.2 DI-D (V88W, V98W)	125	02/07 →				**FCP1021**	SUMITOMO	
3.2 DI-D 4WD	140	02/07 →	**FCP1698**	SUMITOMO				
3.2 DI-D 4WD	140	02/07 →				**FCP1021**	SUMITOMO	
3.2 DI-D 4WD (V98W, V88W)	147	01/09 →	**FCP1698**	SUMITOMO				
3.2 DI-D 4WD (V98W, V88W)	147	01/09 →				**FCP1021**	SUMITOMO	
3.8 V6	182	02/10 →	**FCP1698**	SUMITOMO				
3.8 V6	182	02/10 →				**FCP1021**	SUMITOMO	
3.8 V6 (V87W, V97W)	184	02/07 →	**FCP1698**	SUMITOMO				
3.8 V6 (V87W, V97W)	184	02/07 →				**FCP1021**	SUMITOMO	
PAJERO IV Van (V90, V80)								
3.2 DI-D	118	11/06 →	**FCP1698**	SUMITOMO				
3.2 DI-D	118	11/06 →				**FCP1021**	SUMITOMO	
3.2 TD 4WD	147	01/10 →	**FCP1698**	SUMITOMO				
3.2 TD 4WD	147	01/10 →				**FCP1021**	SUMITOMO	
Pajero Sport								
2.5 D	73	11/98 →	**FCP765**	AKEBONO				
3.0 i 24V	130	11/98 →	**FCP765**	AKEBONO				
Sapporo								
2.0 Coupe A123A, A164A		05/78 → 02/84	**FCP170**	SUMITOMO				
Shogun								
2.3 TD L048 LWB		01/84 → 09/86	**FCP170**	SUMITOMO				
2.4 i (V21/41) (II) 16V	82	01/91 → 08/94	**FCP765**	AKEBONO				
2.5 TD V24, V44	73	04/91 →	**FCP765**	AKEBONO				
2.5 TD V24, V44	73	04/91 →				**FCP1280**	AKEBONO	
2.8 TD V46 LWB	92	03/94 →	**FCP765**	AKEBONO				
2.8 TD V46 LWB	92	03/94 →				**FCP1280**	AKEBONO	
2.8 V24, V44		04/91 →	**FCP765**	AKEBONO				
2.8 V24, V44		04/91 →				**FCP1280**	AKEBONO	
3.0 V23, V43		04/91 →	**FCP765**	AKEBONO				
3.0 V23, V43		04/91 →				**FCP1280**	AKEBONO	

For material availability see page 16-18 / Per la disponibilità materiali vedere a pagina 16-18

		kW				NOTE			NOTE
...MITSUBISHI									
...Shogun									
3.5 V25, V45 24V	143, 153	04/94 →		FCP765	AKEBONO				
Shogun Sport									
2.5 D	73	03/00 →		FCP765	AKEBONO				
3.0 i 24V	130	03/00 →		FCP765	AKEBONO				
Sigma									
1.6 i AV161 V SW Estate		01/80 →	12/81	FCP170	SUMITOMO				
3.0 F16	130, 151	04/91 →	10/96	FCP765	AKEBONO				
Space Star									
1.3 16V	63	08/98 →		FCP1093	LUCAS/TRW				
1.6 i 16V		09/01 →		FCP1093	LUCAS/TRW				
1.8 16V	90	08/98 →		FCP1093	LUCAS/TRW				
1.9 Di	75	02/01 →		FCP1093	LUCAS/TRW				
MORGAN									
Four Four									
1.6 (Ford Engine)		01/68 →	01/86	FCP809	LUCAS/TRW				
Plus 8									
3.5 i V8 16V		03/84 →	05/90	FCP116	ATE				
3.5 V8 16V		01/66 →	12/73				FCP815	LUCAS/TRW	
3.5 V8 16V		01/83 →	03/84	FCP116	ATE				
NISSAN									
180 SX									
S13		01/96 →	01/99	FCP1430	SUMITOMO				
200SX (S13)									
1.8 S13 16V	124	04/89 →	09/91	FCP600	AKEBONO				
1.8 S13 16V	124	09/91 →	09/94	FCP691	SUMITOMO				
200SX (S14)									
2.0 i 16V Turbo	147	10/93 →	12/99	FCP986	SUMITOMO				
2.0 i 16V Turbo	147	10/93 →	12/99				FCP484	AKEBONO	
2.0 i S14 16V		10/94 →	05/01				FCP484	AKEBONO	
280ZX									
2.8 Fairlady (S130)		08/81 →	12/84				FCP484	AKEBONO	
300 ZX (Z32)									
3.0 Twin Turbo	197	05/90 →	09/95	FCP986	SUMITOMO				
3.0 Twin Turbo	208	05/90 →	09/95	FCP986	SUMITOMO				
300ZX (Z31)									
3.0 i		01/84 →	12/86				FCP484	AKEBONO	
3.0 i		01/87 →	08/87				FCP484	AKEBONO	
3.0 i		09/87 →	03/90				FCP484	AKEBONO	
350Z									
3.5 V6 24V	221	04/02 →		FCP1561	BREMBO				
3.5 V6 24V	221	04/02 →					FCP1562	BREMBO	
350Z		01/03 →	12/03	FCP1430	SUMITOMO				
350Z		01/03 →	12/03				FCP1693	AKEBONO	
Enthusiast / Touring / Grand Touring / Track		01/04 →	12/08	FCP1690	No BREMBO	Not 18" Wheels			
Enthusiast / Touring / Grand Touring / Track		01/04 →	12/08				FCP1693	AKEBONO	
370 Z									
3.7	241	06/09 →		FCP4172	AKEBONO				
3.7	241	06/09 →					FCP4173	AKEBONO	
Altima									
		01/93 →	12/01	FCP1430	SUMITOMO				
2.5 S / SL		01/06 →	12/06	FCP1430	SUMITOMO				
2.5 S / SL		01/06 →	12/06				FCP1693	AKEBONO	
3.5 SE / SL		01/06 →	12/06	FCP1430	SUMITOMO				
3.5 SE / SL		01/06 →	12/06				FCP1693	AKEBONO	
3.5 SE-R		01/06 →	12/06	FCP1786	SUMITOMO				

For material availability see page 16-18 / Per la disponibilità materiali vedere a pagina 16-18

FERODO RACING
Updated on November 2020

...NISSAN	kW				NOTE			NOTE
...Altima								
3.5 SE-R		01/06 → 12/06				FCP1693	AKEBONO	
Cherry								
1.0 i F10	33	01/77 → 12/79	FCP39	SUMITOMO				
1.0 N10	33, 37	11/78 → 04/82	FCP39	SUMITOMO				
1.2 N10	38	01/79 → 12/82	FCP39	SUMITOMO				
1.3 N10	44	11/78 → 04/82	FCP39	SUMITOMO				
1.4 N10	46	11/78 → 12/82	FCP39	SUMITOMO				
1.5 N10	51	11/78 → 12/82	FCP39	SUMITOMO				
Cherry Europe								
1.2 (RX920, ZX920)	46	01/83 → 12/85	FCP72	BENDIX				
1.2 (RX920, ZX920)	46	01/83 → 12/85	FCP441	ATE				
1.5 (RX920, ZX920)	69	01/83 → 12/85	FCP72	BENDIX				
1.5 (RX920, ZX920)	69	01/83 → 12/85	FCP441	ATE				
GT-R								
Nismo GT3 Race Car		01/15 →	FRP3155					
Juke								
1.5 dCi	81	06/10 →	FCP1430	SUMITOMO				
1.6	86	06/10 →	FCP1430	SUMITOMO				
1.6 DIG-T	140	06/10 →	FCP1430	SUMITOMO				
1.6 DIG-T 4x4	140	06/10 →	FCP1430	SUMITOMO				
Maxima								
2.0	103	01/95 →	FCP1430	SUMITOMO				
2.0	103	02/95 → 12/95	FCP691	SUMITOMO				
3.0 J30	125	06/89 → 09/94	FCP691	SUMITOMO				
Micra								
1.0 K11 16V	40	01/93 → 09/00	FCP859	LUCAS/TRW				
1.2 i K12 16V	59	01/03 →	FCP1617	LUCAS/TRW				
1.3 K11 16V	55	01/93 → 09/00	FCP859	LUCAS/TRW				
1.4 i 16V	60	09/00 → 01/03	FCP859	LUCAS/TRW				
1.4 i K12 16V	65	01/03 →	FCP1617	LUCAS/TRW				
1.5 D K11	42	05/98 → 01/03	FCP859	LUCAS/TRW				
1.5 Dci K12 16V	48	01/03 →	FCP1617	LUCAS/TRW				
NV400 Box								
2.3 dCi	107	11/11 →	FCP4327	AKEB/SUMI				
2.3 dCi	74	11/11 →	FCP4327	AKEB/SUMI				
2.3 dCi	92	11/11 →	FCP4327	AKEB/SUMI				
2.3 dCi	110	02/14 →	FCP4327	AKEB/SUMI				
2.3 dCi	120	06/14 →	FCP4327	AKEB/SUMI				
2.3 dCi	81	06/14 →	FCP4327	AKEB/SUMI				
2.3 dCi [RWD]	107	11/11 →	FCP4327	AKEB/SUMI				
2.3 dCi [RWD]	92	11/11 →	FCP4327	AKEB/SUMI				
2.3 dCi [RWD]	100	06/14 →	FCP4327	AKEB/SUMI				
2.3 dCi [RWD]	110	02/14 →	FCP4327	AKEB/SUMI				
2.3 dCi [RWD]	120	06/14 →	FCP4327	AKEB/SUMI				
NV400 Bus								
2.3 dCi	107	11/11 →	FCP4327	AKEB/SUMI				
2.3 dCi	74	11/11 →	FCP4327	AKEB/SUMI				
2.3 dCi	92	11/11 →	FCP4327	AKEB/SUMI				
2.3 dCi	100	06/14 →	FCP4327	AKEB/SUMI				
2.3 dCi	110	02/14 →	FCP4327	AKEB/SUMI				
2.3 dCi	120	06/14 →	FCP4327	AKEB/SUMI				
2.3 dCi	81	06/14 →	FCP4327	AKEB/SUMI				
NV400 Platform/Chassis								
2.3 dCi	107	11/11 →	FCP4327	AKEB/SUMI				
2.3 dCi	74	11/11 →	FCP4327	AKEB/SUMI				
2.3 dCi	92	11/11 →	FCP4327	AKEB/SUMI				
2.3 dCi	110	08/14 →	FCP4327	AKEB/SUMI				
2.3 dCi	120	06/14 →	FCP4327	AKEB/SUMI				
2.3 dCi [RWD]	107	11/11 →	FCP4327	AKEB/SUMI				
2.3 dCi [RWD]	92	11/11 →	FCP4327	AKEB/SUMI				
2.3 dCi [RWD]	100	06/14 →	FCP4327	AKEB/SUMI				
2.3 dCi [RWD]	110	08/14 →	FCP4327	AKEB/SUMI				
2.3 dCi [RWD]	120	06/14 →	FCP4327	AKEB/SUMI				

For material availability see page 16-18 / Per la disponibilità materiali vedere a pagina 16-18

	kW				NOTE			NOTE
...NISSAN								
Prairie								
2.0 KA24E		01/92 → 12/93	FCP600	AKEBONO				
2.0 M11	66	04/89 → 12/91	FCP600	AKEBONO				
2.0 M11	77	04/89 → 12/91	FCP600	AKEBONO				
2.0 M11	85	04/89 → 12/91	FCP600	AKEBONO				
2.4 KA24E	93	01/92 → 12/93	FCP600	AKEBONO				
PRAIRIE PRO (M11)								
2.0 i	72	10/88 → 04/92	FCP600	AKEBONO				
Primera								
1.6 i P12	78	03/02 →				FCP1540	ATE	
1.6 W10 SW Estate 16V	66, 75	01/90 → 10/96	FCP600	AKEBONO				
1.8 i P12	85	03/02 →				FCP1540	ATE	
1.9 dCi P12	88	03/03 →				FCP1540	ATE	
2.0 D W10 SW Estate	55	01/92 → 03/98	FCP600	AKEBONO				
2.0 D W10 SW Estate	55	01/90 → 10/96	FCP600	AKEBONO				
2.0 i P12	103	03/02 →				FCP1540	ATE	
2.0 i P12 SW Estate	103	03/02 →				FCP1540	ATE	
2.0 W10 Petrol SW Estate 16V	85	01/90 → 04/93	FCP600	AKEBONO				
2.2 dCi P12	102	03/03 →				FCP1540	ATE	
2.2 TD Di P12	93	03/02 →				FCP1540	ATE	
Silvia								
1.8 i S12 (180ZX) (Turbo)		01/83 → 12/86				FCP484	AKEBONO	
1.8 i S12 (180ZX) (Turbo)		01/87 → 12/89				FCP484	AKEBONO	
2.0 i S12 (200ZX)		01/83 → 12/89				FCP484	AKEBONO	
2.0 i S14 (200SX) (Turbo) 16V		04/94 →				FCP484	AKEBONO	
S15, S13		01/99 →	FCP1430	SUMITOMO				
Skyline								
GT-R (R35)	357	01/08 →	FRP3106	BREMBO				
GT-R (R35)	357	01/08 →				FCP1281	BREMBO	
GT-R (R35)	390	02/11 →	FRP3106	BREMBO				
GT-R (R35)	390	02/11 →				FCP1281	BREMBO	
R32 / R33 GTS		01/89 → 12/98	FCP986	SUMITOMO				
R33 GTR / R34		01/98 → 12/02	FCP1298	BREMBO				
Sunny								
1.2 B110		01/71 → 12/73	FCP39	SUMITOMO				
1.2 B210 (120Y)	38	01/73 → 12/75	FCP39	SUMITOMO				
Teana I (J31)								
2.0	103	10/03 → 06/08	FCP1430	SUMITOMO				
3.5	170	10/03 → 06/08	FCP1430	SUMITOMO				
Tiida (C11X&SC11X)								
1.5	78	09/07 →	FCP1430	SUMITOMO				
1.6	81	09/07 →	FCP1430	SUMITOMO				
1.8	93	09/07 →	FCP1430	SUMITOMO				
Tiida Hatchback								
1.5	80	05/04 → 02/07	FCP1430	SUMITOMO				
NSU								
Prinz								
	22	01/61 → 12/70	FCP3	ATE				
Spider								
Wankel	37	01/64 → 12/67	FCP3	ATE				

For material availability see page 16-18 / Per la disponibilità materiali vedere a pagina 16-18

FERODO RACING
Updated on November 2020

	kW				NOTE			NOTE
OLDSMOBILE								
Eighty Eight								
		01/74 → 12/85	FRP3057	KELGATE				
Ninety Eight								
		01/74 → 12/89	FRP3057	KELGATE				
Omega								
		01/75 → 12/79	FRP3057	KELGATE				
Toronado								
6.6 16V	105	01/72 → 12/78	FRP3057	KELGATE				
7.5 16V	140	01/72 → 12/78	FRP3057	KELGATE				
OPEL								
ADAM								
1.4 S	110	11/14 →	FCP1466	BOSCH	For PR Number JQ3, JQ4			
1.4 S	110	11/14 →	FCP1640	ATE	For PR Number J79			
1.4 S	110	11/14 →				FCP1858	LUCAS/TRW	
Rallye Cup		01/12 →	FCP1667					
Rallye Cup		01/12 →				FCP1858		
Rallye R2		01/14 →	FRP501					
Rallye R2		01/14 →				FCP1858		
Admiral								
2.8 E	118	01/68 → 12/73	FCP11	ATE				
2.8 E	118	01/68 → 12/73				FCP2	ATE	
2.8 S	97, 103	01/64 → 12/73	FCP11	ATE				
2.8 S	97, 103	01/64 → 12/73				FCP2	ATE	
Ascona (A)								
1.6		01/70 → 12/75	FCP2	ATE				
1.6 i		01/73 → 12/75	FCP2	ATE				
1.6 i S, Auto	51, 62	01/73 → 12/75	FCP2	ATE				
1.9	55, 66	01/70 → 12/75	FCP2	ATE				
1.9 i	55, 66	01/73 → 12/75	FCP2	ATE				
Ascona (B)								
1.1		01/78 → 12/81	FCP173	GM				
1.2	40, 44	09/75 → 08/78	FCP116	ATE				
1.2	40, 44	09/78 → 07/81	FCP173	GM				
1.3	44, 55	07/75 → 08/78	FCP116	ATE				
1.3	44, 55	09/78 → 07/81	FCP173	GM				
1.6	44, 55	07/75 → 08/78	FCP116	ATE				
1.6	44, 55	09/78 → 07/81	FCP173	GM				
1.9	55, 66	07/75 → 08/78	FCP116	ATE				
1.9	55, 66	09/78 → 07/81	FCP173	GM				
2.0	66, 74	07/75 → 08/78	FCP116	ATE				
Ascona (C)								
1.3	44, 55	08/81 → 12/88	FCP173	GM				
1.3	44, 55	12/83 → 12/88	FCP173	GM				
1.6	55	08/81 → 12/88	FCP173	GM				
1.6	55, 60	12/83 → 12/88	FCP173	GM				
1.8	85	08/81 → 12/83	FCP173	GM				
1.8	62	12/83 → 12/88	FCP173	GM				
1.8	74	12/83 → 12/88	FCP173	GM				
1.8	85	12/83 → 12/88	FCP173	GM				
2.0	81	01/81 → 12/89	FCP173	GM				
2.0	85	08/82 → 12/88	FCP173	GM				
2.0 GT Sport	95	12/83 → 02/89	FCP173	GM				
ASCONA B (81_, 86_, 87_, 88_)								
2.0 D	43	08/78 → 08/81	FCP173	GM				
2.0 E	81	08/79 → 08/81	FCP173	GM				
2.0 N	66	08/77 → 08/81	FCP173	GM				
2.0 S	74	08/77 → 08/81	FCP173	GM				
Astra								
1.4	40, 60	09/91 → 02/98	FCP584	ATE	ABS			
1.4	40, 60	09/91 → 02/98	FCP732	ATE				
1.4 16V	66	09/91 → 02/98	FCP584	ATE	ABS			
1.4 16V	66	09/91 → 02/98	FCP732	ATE				
1.4 i F	40, 60	01/94 → 02/98	FCP732	ATE				

For material availability see page 16-18 / Per la disponibilità materiali vedere a pagina 16-18

...OPEL	kW				NOTE			NOTE
...Astra								
1.4 i F 16V	66	01/94 → 02/98	FCP732	ATE				
1.4 i SW Estate F 16V	66	01/96 → 02/98	FCP584	ATE				
1.4 i SW Estate F 16V	66	01/96 → 02/98	FCP732	ATE				
1.4 SW Estate	40, 60	09/91 → 02/98	FCP584	ATE	ABS			
1.4 SW Estate	40, 60	09/91 → 02/98	FCP732	ATE				
1.4 SW Estate 16V	66	09/91 → 02/98	FCP584	ATE	ABS			
1.4 SW Estate 16V	66	09/91 → 02/98	FCP732	ATE				
1.6	52	09/91 → 02/98	FCP584	ATE	ABS			
1.6	52	09/91 → 02/98	FCP732	ATE				
1.6	55	09/91 → 02/98	FCP584	ATE	ABS			
1.6	55	09/91 → 02/98	FCP732	ATE				
1.6	74	09/91 → 02/98	FCP584	ATE	ABS			
1.6	74	09/91 → 02/98	FCP732	ATE				
1.6 SW Estate	52	09/91 → 02/98	FCP584	ATE	ABS			
1.6 SW Estate	52	09/91 → 02/98	FCP732	ATE				
1.6 SW Estate	55	09/91 → 02/98	FCP584	ATE	ABS			
1.6 SW Estate	55	09/91 → 02/98	FCP732	ATE				
1.6 SW Estate	74	09/91 → 02/98	FCP584	ATE	ABS			
1.6 SW Estate	74	09/91 → 02/98	FCP732	ATE				
1.7 D F	42, 44	01/94 → 02/98	FCP732	ATE				
1.7 D F	42, 44	09/91 → 02/98	FCP584	ATE	ABS			
1.7 D F	42, 44	09/91 → 02/98	FCP732	ATE				
1.7 D F SW Estate	42, 44	09/91 → 02/98	FCP584	ATE	ABS			
1.7 D F SW Estate	42, 44	09/91 → 02/98	FCP732	ATE				
1.7 TD F	50	01/94 → 02/98	FCP584	ATE				
1.7 TD F	50	01/94 → 02/98	FCP732	ATE				
1.7 TD F	50	09/91 → 02/98	FCP584	ATE	ABS			
1.7 TD F	50	09/91 → 02/98	FCP732	ATE				
1.8 F	66, 92	09/91 → 02/98	FCP584	ATE	ABS			
1.8 F	66, 92	09/91 → 02/98	FCP732	ATE				
1.8 GSi 16V	92	09/91 → 02/98	FCP584	ATE				
1.8 GSi 16V	92	09/91 → 02/98				FCP586	ATE	
1.8 i F	66, 92	01/95 → 02/98	FCP584	ATE				
1.8 i F	66, 92	01/95 → 02/98	FCP732	ATE				
2.0 F	85, 100	09/91 → 02/98	FCP584	ATE				
2.0 F	85, 100	09/91 → 02/98				FCP586	ATE	
Astra G								
1.4 16V	44	03/98 → 05/01	FCP1293	ATE				
1.4 16V	44	03/98 → 05/01				FCP1294	BOSCH	
1.4 16V	60	03/98 → 05/01	FCP1293	ATE				
1.4 16V	60	03/98 → 05/01				FCP1294	BOSCH	
1.4 16V	60	06/01 → 03/04	FCP1293	ATE				
1.4 16V	60	06/01 → 03/04				FCP1294	BOSCH	
1.4 16V	66	03/98 → 05/01	FCP1293	ATE				
1.4 16V	66	03/98 → 05/01				FCP1294	BOSCH	
1.4 16V	66	06/98 → 07/04	FCP1293	ATE				
1.4 16V	66	06/98 → 07/04				FCP1521	LUCAS/TRW	
1.4 16V	66	06/01 → 03/04	FCP1293	ATE				
1.4 16V	66	06/01 → 03/04				FCP1294	BOSCH	
1.6	55	02/98 → 09/00	FCP1293	ATE				
1.6	55	02/98 → 09/00				FCP1521	LUCAS/TRW	
1.6	55	03/98 → 05/01	FCP1293	ATE				
1.6	55	03/98 → 05/01				FCP1294	BOSCH	
1.6	55	06/01 → 03/04	FCP1293	ATE				
1.6	55	06/01 → 03/04				FCP1294	BOSCH	
1.6	74	03/98 → 05/01	FCP1293	ATE				
1.6	74	03/98 → 05/01				FCP1294	BOSCH	
1.7 TD	50	02/98 → 08/00	FCP1293	ATE				
1.7 TD	50	02/98 → 08/00				FCP1521	LUCAS/TRW	
1.7 TD	50	03/98 → 05/01	FCP1293	ATE				
1.7 TD	50	03/98 → 05/01				FCP1294	BOSCH	
1.7 TD	50	06/01 → 03/04	FCP1293	ATE				
1.7 TD	50	06/01 → 03/04				FCP1294	BOSCH	
1.7 TD	60	03/98 → 05/01	FCP1293	ATE				
1.7 TD	60	03/98 → 05/01				FCP1294	BOSCH	
1.8 16V	66	03/98 → 05/01	FCP1295	ATE				
1.8 16V	66	03/98 → 05/01				FCP1294	BOSCH	
1.8 16V	85	02/98 → 09/00	FCP1293	ATE	256mm disc			
1.8 16V	85	02/98 → 09/00	FCP1295	ATE	280mm disc			
1.8 16V	85	02/98 → 09/00				FCP1521	LUCAS/TRW	
1.8 16V	85	03/98 → 05/01	FCP1295	ATE				
1.8 16V	85	03/98 → 05/01				FCP1294	BOSCH	
1.8 16V	85	06/01 → 03/04	FCP1295	ATE				
1.8 16V	85	06/01 → 03/04				FCP1294	BOSCH	
1.8 16V	92	03/98 → 05/01	FCP1295	ATE				
1.8 16V	92	03/98 → 05/01				FCP1294	BOSCH	

For material availability see page 16-18 / Per la disponibilità materiali vedere a pagina 16-18

FERODO RACING
Updated on November 2020

...OPEL										
		kW				NOTE				NOTE
...Astra G										
2.0 16V		100	02/98 → 07/04	**FCP1293**	ATE	256mm disc				
2.0 16V		100	02/98 → 07/04	**FCP1295**	ATE	280mm disc				
2.0 16V		100	02/98 → 07/04				**FCP1521**	LUCAS/TRW		
2.0 16V		100	03/98 → 05/01	**FCP1295**	ATE					
2.0 16V		100	03/98 → 05/01				**FCP1294**	BOSCH		
2.0 16V		100	06/01 → 03/04	**FCP1295**	ATE					
2.0 16V		100	06/01 → 03/04				**FCP1294**	BOSCH		
2.0 16V		110	03/98 → 05/01	**FCP1295**	ATE					
2.0 16V		110	03/98 → 05/01				**FCP1294**	BOSCH		
2.0 16V		85	03/98 → 05/01	**FCP1295**	ATE					
2.0 16V		85	03/98 → 05/01				**FCP1294**	BOSCH		
2.0 DTi 16V		74	03/98 → 05/01	**FCP1295**	ATE					
2.0 DTi 16V		74	03/98 → 05/01				**FCP1294**	BOSCH		
2.0 DTi 16V		74	08/99 → 07/04	**FCP1293**	ATE	256mm disc				
2.0 DTi 16V		74	08/99 → 07/04	**FCP1295**	ATE	280mm disc				
2.0 DTi 16V		74	08/99 → 07/04				**FCP1521**	LUCAS/TRW		
2.0 DTi 16V		74	06/01 → 03/04	**FCP1295**	ATE					
2.0 DTi 16V		74	06/01 → 03/04				**FCP1294**	BOSCH		
ASTRA G Box (F70)										
1.6		55	01/99 → 09/00	**FCP1293**	ATE					
1.6		55	01/99 → 09/00				**FCP1521**	LUCAS/TRW		
1.6		62	09/00 → 04/05	**FCP1293**	ATE	256mm disc				
1.6		62	09/00 → 04/05	**FCP1295**	ATE	280mm disc				
1.6		62	09/00 → 04/05				**FCP1521**	LUCAS/TRW		
1.7 TD		50	01/99 → 04/05	**FCP1293**	ATE					
1.7 TD		50	01/99 → 04/05				**FCP1521**	LUCAS/TRW		
2.0 DI		60	01/99 → 04/05	**FCP1293**	ATE	256mm disc				
2.0 DI		60	01/99 → 04/05	**FCP1295**	ATE	280mm disc				
2.0 DI		60	01/99 → 04/05				**FCP1521**	LUCAS/TRW		
ASTRA G Convertible (F67)										
1.6		76	01/03 → 10/05	**FCP1293**	ATE					
1.6		76	01/03 → 10/05				**FCP1521**	LUCAS/TRW		
1.6 16V		74	03/01 → 10/05	**FCP1293**	ATE	256mm disc				
1.6 16V		74	03/01 → 10/05	**FCP1295**	ATE	280mm disc				
1.6 16V		74	03/01 → 10/05				**FCP1521**	LUCAS/TRW		
1.8 16V		92	03/01 → 10/05	**FCP1293**	ATE	256mm disc				
1.8 16V		92	03/01 → 10/05	**FCP1295**	ATE	280mm disc				
1.8 16V		92	03/01 → 10/05				**FCP1521**	LUCAS/TRW		
2.0 16V Turbo		147	11/02 → 10/05	**FCP1068**	ATE					
2.0 16V Turbo		147	11/02 → 10/05				**FCP1521**	LUCAS/TRW		
2.0 OPC		141	03/02 → 10/05	**FCP1068**	ATE					
2.0 OPC		141	03/02 → 10/05				**FCP1521**	LUCAS/TRW		
2.2 16V		108	03/01 → 10/05	**FCP1295**	ATE					
2.2 16V		108	03/01 → 10/05				**FCP1521**	LUCAS/TRW		
2.2 DTI		92	09/02 → 10/05	**FCP1295**	ATE					
2.2 DTI		92	09/02 → 10/05				**FCP1521**	LUCAS/TRW		
ASTRA G Coupe (F07_)										
1.6 16V		74	03/00 → 05/05	**FCP1293**	ATE					
1.6 16V		74	03/00 → 05/05				**FCP1521**	LUCAS/TRW		
1.6 16V		76	03/00 → 05/05	**FCP1293**	ATE	256mm disc				
1.6 16V		76	03/00 → 05/05	**FCP1295**	ATE	280mm disc				
1.6 16V		76	03/00 → 05/05				**FCP1521**	LUCAS/TRW		
1.8 16V		85	03/00 → 10/00	**FCP1293**	ATE	256mm disc				
1.8 16V		85	03/00 → 10/00	**FCP1295**	ATE	280mm disc				
1.8 16V		85	03/00 → 10/00				**FCP1521**	LUCAS/TRW		
1.8 16V		92	09/00 → 05/05	**FCP1295**	ATE					
1.8 16V		92	09/00 → 05/05				**FCP1521**	LUCAS/TRW		
2.0 16V Turbo		140	09/00 → 08/01	**FCP1068**	ATE	280mm disc				
2.0 16V Turbo		140	09/00 → 08/01	**FCP1295**	ATE	280mm disc				
2.0 16V Turbo		140	09/00 → 08/01				**FCP1521**	LUCAS/TRW		
2.0 16V Turbo		141	06/01 → 03/04	**FCP1295**	ATE					
2.0 16V Turbo		141	06/01 → 03/04				**FCP1294**	BOSCH		
2.0 16V Turbo		141	08/01 → 05/05	**FCP1068**	ATE	280mm disc				
2.0 16V Turbo		141	08/01 → 05/05	**FCP1295**	ATE	280mm disc				
2.0 16V Turbo		141	08/01 → 05/05				**FCP1521**	LUCAS/TRW		
2.0 16V Turbo		147	11/02 → 05/05	**FCP1068**	ATE	280mm disc				
2.0 16V Turbo		147	11/02 → 05/05	**FCP1295**	ATE	280mm disc				
2.0 16V Turbo		147	11/02 → 05/05				**FCP1521**	LUCAS/TRW		
2.2 16V		108	09/00 → 05/05	**FCP1295**	ATE					
2.2 16V		108	09/00 → 05/05				**FCP1521**	LUCAS/TRW		
2.2 DTI		92	09/02 → 05/05	**FCP1295**	ATE					
2.2 DTI		92	09/02 → 05/05				**FCP1521**	LUCAS/TRW		

For material availability see page 16-18 / Per la disponibilità materiali vedere a pagina 16-18

...OPEL

	kW				NOTE			NOTE
ASTRA G Estate (F35_)								
1.2 16V	48	02/98 → 09/00	**FCP1293**	ATE				
1.2 16V	48	02/98 → 09/00				**FCP1521**	LUCAS/TRW	
1.2 16V	55	09/00 → 07/04	**FCP1293**	ATE				
1.2 16V	55	09/00 → 07/04				**FCP1521**	LUCAS/TRW	
1.4	66	09/07 → 12/09	**FCP1293**	ATE				
1.4	66	09/07 → 12/09				**FCP1521**	LUCAS/TRW	
1.6	62	09/00 → 07/04	**FCP1293**	ATE				
1.6	62	09/00 → 07/04				**FCP1521**	LUCAS/TRW	
1.6	62	06/01 → 03/04	**FCP1293**	ATE				
1.6	62	06/01 → 03/04				**FCP1294**	BOSCH	
1.6	76	12/02 → 07/09	**FCP1293**	ATE				
1.6	76	12/02 → 07/09				**FCP1521**	LUCAS/TRW	
1.6 16V	74	02/98 → 07/04	**FCP1293**	ATE	256mm disc			
1.6 16V	74	02/98 → 07/04	**FCP1295**	ATE	280mm disc			
1.6 16V	74	02/98 → 07/04				**FCP1521**	LUCAS/TRW	
1.6 CNG	71	03/03 → 07/04	**FCP1293**	ATE	256mm disc			
1.6 CNG	71	03/03 → 07/04	**FCP1295**	ATE	280mm disc			
1.6 CNG	71	03/03 → 07/04				**FCP1521**	LUCAS/TRW	
1.7 CDTI	59	04/03 → 07/09	**FCP1293**	ATE				
1.7 CDTI	59	04/03 → 07/09				**FCP1521**	LUCAS/TRW	
1.7 DTI 16V	55	02/00 → 07/04	**FCP1293**	ATE				
1.7 DTI 16V	55	02/00 → 07/04				**FCP1521**	LUCAS/TRW	
1.8 16V	92	09/00 → 07/04	**FCP1293**	ATE	256mm disc			
1.8 16V	92	09/00 → 07/04	**FCP1295**	ATE	280mm disc			
1.8 16V	92	09/00 → 07/04				**FCP1521**	LUCAS/TRW	
1.8 16V	92	06/01 → 03/04	**FCP1295**	ATE				
1.8 16V	92	06/01 → 03/04				**FCP1294**	BOSCH	
2.0 DI	60	02/98 → 07/04	**FCP1293**	ATE	256mm disc			
2.0 DI	60	02/98 → 07/04	**FCP1295**	ATE	280mm disc			
2.0 DI	60	02/98 → 07/04				**FCP1521**	LUCAS/TRW	
2.0 OPC	141	09/02 → 07/04	**FCP1068**	ATE				
2.0 OPC	141	09/02 → 07/04				**FCP1521**	LUCAS/TRW	
2.0 OPC	147	11/02 → 07/04	**FCP1068**	ATE				
2.0 OPC	147	11/02 → 07/04				**FCP1521**	LUCAS/TRW	
2.2 16V	108	03/01 → 07/04	**FCP1295**	ATE				
2.2 16V	108	03/01 → 07/04				**FCP1521**	LUCAS/TRW	
2.2 DTI	86	09/02 → 07/04	**FCP1295**	ATE				
2.2 DTI	86	09/02 → 07/04				**FCP1521**	LUCAS/TRW	
2.2 DTI	92	09/02 → 07/04	**FCP1295**	ATE				
2.2 DTI	92	09/02 → 07/04				**FCP1521**	LUCAS/TRW	
ASTRA G Hatchback (F48_, F08_)								
1.2 16V	48	02/98 → 09/00	**FCP1293**	ATE				
1.2 16V	48	02/98 → 09/00				**FCP1521**	LUCAS/TRW	
1.2 16V	55	09/00 → 01/05	**FCP1293**	ATE				
1.2 16V	55	09/00 → 01/05				**FCP1521**	LUCAS/TRW	
1.4	66	09/07 → 12/09	**FCP1293**	ATE				
1.4	66	09/07 → 12/09				**FCP1521**	LUCAS/TRW	
1.4 16V	66	02/98 → 01/05	**FCP1293**	ATE				
1.4 16V	66	02/98 → 01/05				**FCP1521**	LUCAS/TRW	
1.6	55	02/98 → 09/00	**FCP1293**	ATE				
1.6	55	02/98 → 09/00				**FCP1521**	LUCAS/TRW	
1.6	62	09/00 → 01/05	**FCP1293**	ATE				
1.6	62	09/00 → 01/05				**FCP1521**	LUCAS/TRW	
1.6	76	12/02 → 12/09	**FCP1293**	ATE				
1.6	76	12/02 → 12/09				**FCP1521**	LUCAS/TRW	
1.6 16V	74	02/98 → 01/05	**FCP1293**	ATE	256mm disc			
1.6 16V	74	02/98 → 01/05	**FCP1295**	ATE	280mm disc			
1.6 16V	74	02/98 → 01/05				**FCP1521**	LUCAS/TRW	
1.7 CDTI	59	04/03 → 01/05	**FCP1293**	ATE				
1.7 CDTI	59	04/03 → 01/05				**FCP1521**	LUCAS/TRW	
1.7 DTI 16V	55	02/00 → 01/05	**FCP1293**	ATE				
1.7 DTI 16V	55	02/00 → 01/05				**FCP1521**	LUCAS/TRW	
1.7 TD	50	02/98 → 08/00	**FCP1293**	ATE				
1.7 TD	50	02/98 → 08/00				**FCP1521**	LUCAS/TRW	
1.8 16V	85	02/98 → 09/00	**FCP1293**	ATE	256mm disc			
1.8 16V	85	02/98 → 09/00	**FCP1295**	ATE	280mm disc			
1.8 16V	85	02/98 → 09/00				**FCP1521**	LUCAS/TRW	
1.8 16V	92	09/00 → 01/05	**FCP1293**	ATE	256mm disc			
1.8 16V	92	09/00 → 01/05	**FCP1295**	ATE	280mm disc			
1.8 16V	92	09/00 → 01/05				**FCP1521**	LUCAS/TRW	
2.0 16V	100	02/98 → 01/05	**FCP1293**	ATE	256mm disc			
2.0 16V	100	02/98 → 01/05	**FCP1295**	ATE	280mm disc			
2.0 16V	100	02/98 → 01/05				**FCP1521**	LUCAS/TRW	
2.0 16V OPC	118	11/99 → 09/02	**FCP1068**	ATE				
2.0 16V OPC	118	11/99 → 09/02				**FCP1521**	LUCAS/TRW	
2.0 DI	60	02/98 → 01/05	**FCP1293**	ATE	256mm disc			

For material availability see page 16-18 / Per la disponibilità materiali vedere a pagina 16-18

FERODO RACING

Updated on November 2020

...OPEL

...ASTRA G Hatchback (F48_, F08_)

	kW								
2.0 DI	60	02/98 → 01/05	FCP1295	ATE	280mm disc			
2.0 DI	60	02/98 → 01/05				FCP1521	LUCAS/TRW	
2.0 DTI 16V	74	08/99 → 01/05	FCP1293	ATE	256mm disc			
2.0 DTI 16V	74	08/99 → 01/05	FCP1295	ATE	280mm disc			
2.0 DTI 16V	74	08/99 → 01/05				FCP1521	LUCAS/TRW	
2.0 OPC	141	09/02 → 01/05	FCP1068	ATE				
2.0 OPC	141	09/02 → 01/05				FCP1521	LUCAS/TRW	
2.0 OPC	147	11/02 → 01/05	FCP1068	ATE				
2.0 OPC	147	11/02 → 01/05				FCP1521	LUCAS/TRW	
2.2 16V	108	06/00 → 01/05	FCP1295	ATE				
2.2 16V	108	06/00 → 01/05				FCP1521	LUCAS/TRW	
2.2 DTI	86	09/02 → 01/05	FCP1295	ATE				
2.2 DTI	86	09/02 → 01/05				FCP1521	LUCAS/TRW	
2.2 DTI	92	09/02 → 01/05	FCP1295	ATE				
2.2 DTI	92	09/02 → 01/05				FCP1521	LUCAS/TRW	

ASTRA G Saloon (F69_)

1.2 16V	48	09/98 → 09/00	FCP1293	ATE				
1.2 16V	48	09/98 → 09/00				FCP1521	LUCAS/TRW	
1.2 16V	55	09/00 → 01/05	FCP1293	ATE				
1.2 16V	55	09/00 → 01/05				FCP1521	LUCAS/TRW	
1.4	66	09/07 → 12/09	FCP1293	ATE				
1.4	66	09/07 → 12/09				FCP1521	LUCAS/TRW	
1.4 16V	66	09/98 → 01/05	FCP1293	ATE				
1.4 16V	66	09/98 → 01/05				FCP1521	LUCAS/TRW	
1.6	55	09/98 → 09/00	FCP1293	ATE				
1.6	55	09/98 → 09/00				FCP1521	LUCAS/TRW	
1.6	62	09/00 → 01/05	FCP1293	ATE				
1.6	62	09/00 → 01/05				FCP1521	LUCAS/TRW	
1.6	76	12/02 → 01/05	FCP1293	ATE				
1.6	76	12/02 → 01/05				FCP1521	LUCAS/TRW	
1.6 16V	74	09/98 → 01/05	FCP1293	ATE	256mm disc			
1.6 16V	74	09/98 → 01/05	FCP1295	ATE	280mm disc			
1.6 16V	74	09/98 → 01/05				FCP1521	LUCAS/TRW	
1.7 CDTI	59	04/03 → 01/05	FCP1293	ATE				
1.7 CDTI	59	04/03 → 01/05				FCP1521	LUCAS/TRW	
1.7 DTI 16V	55	02/00 → 01/05	FCP1293	ATE				
1.7 DTI 16V	55	02/00 → 01/05				FCP1521	LUCAS/TRW	
1.7 TD	50	09/98 → 08/00	FCP1293	ATE				
1.7 TD	50	09/98 → 08/00				FCP1521	LUCAS/TRW	
1.8 16V	85	09/98 → 09/00	FCP1293	ATE	256mm disc			
1.8 16V	85	09/98 → 09/00	FCP1295	ATE	280mm disc			
1.8 16V	85	09/98 → 09/00				FCP1521	LUCAS/TRW	
1.8 16V	92	06/00 → 01/05	FCP1293	ATE	256mm disc			
1.8 16V	92	06/00 → 01/05	FCP1295	ATE	280mm disc			
1.8 16V	92	06/00 → 01/05				FCP1521	LUCAS/TRW	
2.0 16V	100	09/98 → 01/05	FCP1293	ATE	256mm disc			
2.0 16V	100	09/98 → 01/05	FCP1295	ATE	280mm disc			
2.0 16V	100	09/98 → 01/05				FCP1521	LUCAS/TRW	
2.0 DI	60	09/98 → 01/05	FCP1293	ATE	256mm disc			
2.0 DI	60	09/98 → 01/05	FCP1295	ATE	280mm disc			
2.0 DI	60	09/98 → 01/05				FCP1521	LUCAS/TRW	
2.0 DTI 16V	74	08/99 → 01/05	FCP1293	ATE	256mm disc			
2.0 DTI 16V	74	08/99 → 01/05	FCP1295	ATE	280mm disc			
2.0 DTI 16V	74	08/99 → 01/05				FCP1521	LUCAS/TRW	
2.2 16V	108	03/01 → 01/05	FCP1295	ATE				
2.2 16V	108	03/01 → 01/05				FCP1521	LUCAS/TRW	
2.2 DTI	86	09/02 → 01/05	FCP1295	ATE				
2.2 DTI	86	09/02 → 01/05				FCP1521	LUCAS/TRW	
2.2 DTI	92	09/02 → 01/05	FCP1295	ATE				
2.2 DTI	92	09/02 → 01/05				FCP1521	LUCAS/TRW	

ASTRA H (L48)

1.2	59	08/05 →	FCP1640	ATE				
1.2	59	08/05 →				FCP1521	LUCAS/TRW	
1.3 CDTI	66	08/05 →	FCP1640	ATE				
1.3 CDTI	66	08/05 →				FCP1521	LUCAS/TRW	
1.4	55	04/04 → 10/04	FCP1640	ATE				
1.4	55	04/04 → 10/04				FCP1521	LUCAS/TRW	
1.4	59	04/04 → 10/04	FCP1640	ATE				
1.4	59	04/04 → 10/04				FCP1521	LUCAS/TRW	
1.4	66	03/04 →	FCP1640	ATE				
1.4	66	03/04 →				FCP1521	LUCAS/TRW	
1.4 LPG	66	08/09 →	FCP1640	ATE				
1.4 LPG	66	08/09 →				FCP1521	LUCAS/TRW	
1.6	77	03/04 →	FCP1640	ATE				
1.6	77	03/04 →				FCP1521	LUCAS/TRW	

For material availability see page 16-18 / Per la disponibilità materiali vedere a pagina 16-18

...OPEL	kW				NOTE				NOTE
...ASTRA H (L48)									
1.6	85	12/06 →	FCP1640	ATE					
1.6	85	12/06 →				FCP1521	LUCAS/TRW		
1.6 Turbo	132	02/07 →	FCP1640	ATE					
1.6 Turbo	132	02/07 →				FCP1521	LUCAS/TRW		
1.7 CDTI	59	03/04 →	FCP1640	ATE					
1.7 CDTI	59	03/04 →				FCP1521	LUCAS/TRW		
1.7 CDTI	74	03/04 →	FCP1640	ATE					
1.7 CDTI	74	03/04 →				FCP1521	LUCAS/TRW		
1.7 CDTI	81	02/07 →	FCP1640	ATE					
1.7 CDTI	81	02/07 →				FCP1521	LUCAS/TRW		
1.7 CDTI	92	02/07 →	FCP1640	ATE					
1.7 CDTI	92	02/07 →				FCP1521	LUCAS/TRW		
1.8	103	01/06 →	FCP1640	ATE					
1.8	103	01/06 →				FCP1521	LUCAS/TRW		
1.8	92	03/04 →	FCP1640	ATE					
1.8	92	03/04 →				FCP1521	LUCAS/TRW		
1.9 CDTI	110	09/04 →	FCP1640	ATE					
1.9 CDTI	110	09/04 →				FCP1521	LUCAS/TRW		
1.9 CDTI	74	09/05 →	FCP1640	ATE					
1.9 CDTI	74	09/05 →				FCP1521	LUCAS/TRW		
1.9 CDTI	88	06/04 →	FCP1640	ATE					
1.9 CDTI	88	06/04 →				FCP1521	LUCAS/TRW		
1.9 CDTI 16V	88	04/04 →	FCP1640	ATE					
1.9 CDTI 16V	88	04/04 →				FCP1521	LUCAS/TRW		
2.0 Turbo	125	03/04 →	FCP1640	ATE					
2.0 Turbo	125	03/04 →				FCP1521	LUCAS/TRW		
2.0 Turbo	147	09/04 →	FCP1640	ATE					
2.0 Turbo	147	09/04 →				FCP1521	LUCAS/TRW		
2.0 Turbo	177	03/05 →	FCP1520	ATE					
2.0 Turbo	177	03/05 →				FCP1521	LUCAS/TRW		
ASTRA H Estate (L35)									
1.3 CDTI	66	08/05 →	FCP1640	ATE					
1.3 CDTI	66	08/05 →				FCP1521	LUCAS/TRW		
1.4	55	08/04 →	FCP1640	ATE					
1.4	55	08/04 →				FCP1521	LUCAS/TRW		
1.4	66	08/04 →	FCP1640	ATE					
1.4	66	08/04 →				FCP1521	LUCAS/TRW		
1.4 LPG	66	08/09 →	FCP1640	ATE					
1.4 LPG	66	08/09 →				FCP1521	LUCAS/TRW		
1.6	77	08/04 →	FCP1640	ATE					
1.6	77	08/04 →				FCP1521	LUCAS/TRW		
1.6	85	12/06 →	FCP1640	ATE					
1.6	85	12/06 →				FCP1521	LUCAS/TRW		
1.6 LPG	85	08/09 →	FCP1640	ATE					
1.6 LPG	85	08/09 →				FCP1521	LUCAS/TRW		
1.6 Turbo	132	02/07 →	FCP1640	ATE					
1.6 Turbo	132	02/07 →				FCP1521	LUCAS/TRW		
1.7 CDTI	59	08/04 →	FCP1640	ATE					
1.7 CDTI	59	08/04 →				FCP1521	LUCAS/TRW		
1.7 CDTI	74	08/04 →	FCP1640	ATE					
1.7 CDTI	74	08/04 →				FCP1521	LUCAS/TRW		
1.7 CDTI	81	02/07 →	FCP1640	ATE					
1.7 CDTI	81	02/07 →				FCP1521	LUCAS/TRW		
1.7 CDTI	92	02/07 →	FCP1640	ATE					
1.7 CDTI	92	02/07 →				FCP1521	LUCAS/TRW		
1.8	103	08/05 →	FCP1640	ATE					
1.8	103	08/05 →				FCP1521	LUCAS/TRW		
1.8	92	08/04 →	FCP1640	ATE					
1.8	92	08/04 →				FCP1521	LUCAS/TRW		
1.9 CDTI	110	09/04 →	FCP1640	ATE					
1.9 CDTI	110	09/04 →				FCP1521	LUCAS/TRW		
1.9 CDTI	74	09/05 →	FCP1640	ATE					
1.9 CDTI	74	09/05 →				FCP1521	LUCAS/TRW		
1.9 CDTI	88	09/05 →	FCP1640	ATE					
1.9 CDTI	88	09/05 →				FCP1521	LUCAS/TRW		
1.9 CDTI 16V	88	08/04 →	FCP1640	ATE					
1.9 CDTI 16V	88	08/04 →				FCP1521	LUCAS/TRW		
2.0 Turbo	125	08/04 →	FCP1640	ATE					
2.0 Turbo	125	08/04 →				FCP1521	LUCAS/TRW		
2.0 Turbo	147	09/04 →	FCP1640	ATE					
2.0 Turbo	147	09/04 →				FCP1521	LUCAS/TRW		

For material availability see page 16-18 / Per la disponibilità materiali vedere a pagina 16-18

FERODO RACING
Updated on November 2020

...OPEL

	kW				NOTE			NOTE
ASTRA H GTC (L08)								
1.2	59	08/05 →	FCP1640	ATE				
1.2	59	08/05 →				FCP1521	LUCAS/TRW	
1.3 CDTI	66	04/05 →	FCP1640	ATE				
1.3 CDTI	66	04/05 →				FCP1521	LUCAS/TRW	
1.4	55	03/05 →	FCP1640	ATE				
1.4	55	03/05 →				FCP1521	LUCAS/TRW	
1.4	66	03/05 →	FCP1640	ATE				
1.4	66	03/05 →				FCP1521	LUCAS/TRW	
1.6	77	03/05 →	FCP1640	ATE				
1.6	77	03/05 →				FCP1521	LUCAS/TRW	
1.6	85	12/06 →	FCP1640	ATE				
1.6	85	12/06 →				FCP1521	LUCAS/TRW	
1.6 Turbo	132	02/07 →	FCP1640	ATE				
1.6 Turbo	132	02/07 →				FCP1521	LUCAS/TRW	
1.7 CDTI	59	03/05 →	FCP1640	ATE				
1.7 CDTI	59	03/05 →				FCP1521	LUCAS/TRW	
1.7 CDTi	74	03/05 →	FCP1640	ATE				
1.7 CDTi	74	03/05 →				FCP1521	LUCAS/TRW	
1.7 CDTI	81	02/07 →	FCP1640	ATE				
1.7 CDTI	81	02/07 →				FCP1521	LUCAS/TRW	
1.7 CDTI	92	02/07 →	FCP1640	ATE				
1.7 CDTI	92	02/07 →				FCP1521	LUCAS/TRW	
1.8	103	01/06 →	FCP1640	ATE				
1.8	103	01/06 →				FCP1521	LUCAS/TRW	
1.8	92	03/05 →	FCP1640	ATE				
1.8	92	03/05 →				FCP1521	LUCAS/TRW	
1.9 CDTi	110	03/05 →	FCP1640	ATE				
1.9 CDTi	110	03/05 →				FCP1521	LUCAS/TRW	
1.9 CDTI	74	01/06 →	FCP1640	ATE				
1.9 CDTI	74	01/06 →				FCP1521	LUCAS/TRW	
1.9 CDTI	88	09/05 →	FCP1640	ATE				
1.9 CDTI	88	09/05 →				FCP1521	LUCAS/TRW	
1.9 CDTi 16V	88	03/05 →	FCP1640	ATE				
1.9 CDTi 16V	88	03/05 →				FCP1521	LUCAS/TRW	
2.0 Turbo	125	03/05 →	FCP1640	ATE				
2.0 Turbo	125	03/05 →				FCP1521	LUCAS/TRW	
2.0 Turbo	147	03/05 →	FCP1640	ATE				
2.0 Turbo	147	03/05 →				FCP1521	LUCAS/TRW	
2.0 Turbo	177	08/05 →	FCP1520	ATE				
2.0 Turbo	177	08/05 →				FCP1521	LUCAS/TRW	
ASTRA H Saloon (L69)								
1.3 CDTi	66	02/07 →	FCP1640	ATE				
1.3 CDTi	66	02/07 →				FCP1521	LUCAS/TRW	
1.6	85	02/07 →	FCP1640	ATE				
1.6	85	02/07 →				FCP1521	LUCAS/TRW	
1.7 CDTi	74	02/07 →	FCP1640	ATE				
1.7 CDTi	74	02/07 →				FCP1521	LUCAS/TRW	
1.7 CDTi	81	02/07 →	FCP1640	ATE				
1.7 CDTi	81	02/07 →				FCP1521	LUCAS/TRW	
1.8	103	02/07 →	FCP1640	ATE				
1.8	103	02/07 →				FCP1521	LUCAS/TRW	
ASTRA H TwinTop (L67)								
1.6	77	09/05 →	FCP1640	ATE				
1.6	77	09/05 →				FCP1521	LUCAS/TRW	
1.6	85	12/06 →	FCP1640	ATE				
1.6	85	12/06 →				FCP1521	LUCAS/TRW	
1.6 Turbo	132	02/07 →	FCP1640	ATE				
1.6 Turbo	132	02/07 →				FCP1521	LUCAS/TRW	
1.8	103	09/05 →	FCP1640	ATE				
1.8	103	09/05 →				FCP1521	LUCAS/TRW	
1.8	92	09/05 →	FCP1640	ATE				
1.8	92	09/05 →				FCP1521	LUCAS/TRW	
1.9 CDTi	110	09/05 →	FCP1640	ATE				
1.9 CDTi	110	09/05 →				FCP1521	LUCAS/TRW	
2.0 Turbo	125	09/05 →	FCP1640	ATE				
2.0 Turbo	125	09/05 →				FCP1521	LUCAS/TRW	
2.0 Turbo	147	09/05 →	FCP1640	ATE				
2.0 Turbo	147	09/05 →				FCP1521	LUCAS/TRW	
ASTRA H Van (L70)								
1.3 CDTI	66	08/05 →	FCP1640	ATE				
1.3 CDTI	66	08/05 →				FCP1521	LUCAS/TRW	
1.6	76	02/04 → 11/04	FCP1640	ATE				
1.7 CDTI	74	03/04 →	FCP1640	ATE				
1.7 CDTI	74	03/04 →				FCP1521	LUCAS/TRW	

For material availability see page 16-18 / Per la disponibilità materiali vedere a pagina 16-18

...OPEL									
	kW				NOTE				NOTE
...ASTRA H Van (L70)									
1.7 CDTI	81	02/07 →	FCP1640	ATE					
1.7 CDTI	81	02/07 →				FCP1521	LUCAS/TRW		
1.7 CDTI	92	02/07 →	FCP1640	ATE					
1.7 CDTI	92	02/07 →				FCP1521	LUCAS/TRW		
1.9 CDTI	110	09/04 →	FCP1640	ATE					
1.9 CDTI	110	09/04 →				FCP1521	LUCAS/TRW		
1.9 CDTI	88	09/05 →	FCP1640	ATE					
1.9 CDTI	88	09/05 →				FCP1521	LUCAS/TRW		
1.9 CDTI 16V	88	08/04 →	FCP1640	ATE					
1.9 CDTI 16V	88	08/04 →				FCP1521	LUCAS/TRW		
ASTRA J (P10)									
1.3 CDTI	70	12/09 →	FCP4262	MANDO					
1.4	64	12/09 →	FCP4262	MANDO	Disc Diam mm:276				
1.4	74	12/09 →	FCP4262	MANDO	Disc Diam mm:276				
1.4 LPG	103	01/12 →	FCP4262	MANDO	Disc Diam mm:276				
1.4 Turbo	103	12/09 →	FCP4262	MANDO					
1.4 Turbo	88	10/10 →	FCP4262	MANDO	Disc Diam mm:276				
1.6	85	12/09 →	FCP4262	MANDO	Disc Diam mm:276				
1.6 CDTi	100	01/14 →	FCP4262	MANDO	Disc Diam mm:276				
1.6 CDTi	81	02/14 →	FCP4262	MANDO	Disc Diam mm:276				
1.6 SIDI	125	12/12 →	FCP1334	BREMBO	Disc Diam mm:276				
1.6 SIDI	125	12/12 →	FCP4262	MANDO	Disc Diam mm:276				
1.6 Turbo	132	12/09 →	FCP4262	MANDO					
1.7 CDTI	74	10/10 →	FCP4262	MANDO					
1.7 CDTI	81	12/09 →	FCP4262	MANDO					
1.7 CDTI	92	12/09 →	FCP4262	MANDO					
1.7 CDTI	96	12/09 →	FCP4262	MANDO	Disc Diam mm:276				
2.0 BiTurbo CDTI	143	12/12 →	FCP1334	BREMBO	Disc Diam mm:276				
2.0 BiTurbo CDTI	143	12/12 →	FCP4262	MANDO	Disc Diam mm:276				
2.0 CDTI	118	12/09 →	FCP4262	MANDO	For 276mm Discs				
2.0 CDTI	121	06/11 →	FCP4262	MANDO	Disc Diam mm:276				
ASTRA J GTC									
1.6 CDTI	100	07/14 →	FCP4262	MANDO	Disc Diam mm:276				
1.6 CDTI	81	07/14 →	FCP4262	MANDO	Disc Diam mm:276				
1.6 SIDI	125	12/12 →	FCP1334	BREMBO	Disc Diam mm:276				
1.6 SIDI	125	12/12 →	FCP4262	MANDO	Disc Diam mm:276				
1.6 SIDI	147	07/13 →	FCP1334	BREMBO	Disc Diam mm:276				
1.6 SIDI	147	07/13 →	FCP4262	MANDO	Disc Diam mm:276				
2.0 BiTurbo CDTI	143	10/12 →	FCP1334	BREMBO	Disc Diam mm:276				
2.0 BiTurbo CDTI	143	10/12 →	FCP4262	MANDO	Disc Diam mm:276				
ASTRA J Saloon									
1.3 CDTI	70	06/12 →	FCP4262	MANDO	Disc Diam mm:276				
1.4	74	06/12 →	FCP4262	MANDO	Disc Diam mm:276				
1.4 LPG	103	07/14 →	FCP4262	MANDO	Disc Diam mm:276				
1.4 Turbo	103	06/12 →	FCP4262	MANDO	Disc Diam mm:276				
1.6	85	06/12 →	FCP4262	MANDO	Disc Diam mm:276				
1.6 CDTi	100	01/14 →	FCP4262	MANDO	Disc Diam mm:276				
1.6 CDTi	81	04/14 →	FCP4262	MANDO	Disc Diam mm:276				
1.6 SIDI	125	12/12 →	FCP1334	BREMBO	Disc Diam mm:276				
1.6 SIDI	125	12/12 →	FCP4262	MANDO	Disc Diam mm:276				
1.6 Turbo	132	06/12 →	FCP4262	MANDO	Disc Diam mm:276				
1.7 CDTI	81	06/12 →	FCP4262	MANDO	Disc Diam mm:276				
1.7 CDTI	96	06/12 →	FCP4262	MANDO	Disc Diam mm:276				
ASTRA J Sports Tourer (P10)									
1.3 CDTI	70	10/10 →	FCP4262	MANDO	Disc Diam mm:276				
1.4	64	10/10 → 10/15	FCP4262	MANDO	Disc Diam mm:276				
1.4	74	10/10 →	FCP4262	MANDO					
1.4 LPG	103	01/12 →	FCP4262	MANDO	Disc Diam mm:276				
1.4 Turbo	103	10/10 →	FCP4262	MANDO					
1.4 Turbo	88	10/10 →	FCP4262	MANDO	Disc Diam mm:276				
1.6	85	10/10 →	FCP4262	MANDO	Disc Diam mm:276				
1.6 CDTi	100	01/14 →	FCP4262	MANDO	Disc Diam mm:276				
1.6 CDTi	81	02/14 →	FCP4262	MANDO	Disc Diam mm:276				
1.6 SIDI	125	12/12 →	FCP1334	BREMBO	Disc Diam mm:276				
1.6 SIDI	125	12/12 →	FCP4262	MANDO	Disc Diam mm:276				
1.6 Turbo	132	10/10 →	FCP4262	MANDO					
1.7 CDTI	74	10/10 →	FCP4262	MANDO	Disc Diam mm:276				
1.7 CDTI	81	10/10 →	FCP4262	MANDO					
1.7 CDTI	92	10/10 →	FCP4262	MANDO					
1.7 CDTI	96	10/10 →	FCP4262	MANDO	Disc Diam mm:276				
2.0 BiTurbo CDTI	143	12/12 →	FCP1334	BREMBO	Disc Diam mm:276				
2.0 BiTurbo CDTI	143	12/12 →	FCP4262	MANDO	Disc Diam mm:276				
2.0 CDTI	118	10/10 →	FCP4262	MANDO	Disc Diam mm:276				

For material availability see page 16-18 / Per la disponibilità materiali vedere a pagina 16-18

FERODO RACING

Updated on November 2020

...OPEL	kW				NOTE			NOTE
...ASTRA J Sports Tourer (P10)								
2.0 CDTI	121	08/11 →	FCP4262	MANDO	Disc Diam mm:276			
2.0 CDTI	96	10/10 →	FCP4262	MANDO	Disc Diam mm:276			
Calibra								
2.0	85	09/89 → 12/96	FCP584	ATE				
2.0	85	09/89 → 12/96				FCP586	ATE	
2.0 (Turbo) 16V	150	09/89 → 12/96	FCP685	ATE				
2.0 (Turbo) 16V	150	09/89 → 12/96				FCP586	ATE	
2.0 i Turbo 16V	150	01/95 → 12/96				FCP586	ATE	
2.5 24V	125	09/89 → 12/94	FCP685	ATE				
2.5 24V	125	09/89 → 12/94				FCP586	ATE	
2.5 24V	125	01/95 → 05/98	FCP1068	ATE				
2.5 24V	125	01/95 → 05/98				FCP586	ATE	
COMBO								
1.2	33	07/94 →	FCP732	ATE				
1.2 E		08/84 →	FCP732	ATE				
1.4	44, 60	07/94 →	FCP732	ATE				
1.7 D		08/84 →	FCP732	ATE				
1.7 D	44	07/94 →	FCP732	ATE				
COMBO Box Body / Estate								
1.2 i 16V	55	09/00 →	FCP1424	LUCAS/TRW				
1.3 CDTI 16V	51	08/05 →	FCP1640	ATE				
1.3 CDTI 16V	51	08/05 →				FCP1521	LUCAS/TRW	
1.3 CDTI 16V	55	10/05 →	FCP1640	ATE				
1.3 CDTI 16V	55	10/05 →				FCP1521	LUCAS/TRW	
1.4 i 16V	66	09/00 →	FCP1424	LUCAS/TRW				
1.4 i 16V	66	08/05 →	FCP1640	ATE				
1.4 i 16V	66	08/05 →				FCP1521	LUCAS/TRW	
1.6	64	10/01 →	FCP1424	LUCAS/TRW				
1.6	64	10/01 →				FCP1521	LUCAS/TRW	
1.6 CNG 16V	69	06/06 →	FCP1640	ATE				
1.6 CNG 16V	69	06/06 →				FCP1521	LUCAS/TRW	
1.6 CNG 16V	71	04/05 →	FCP1640	ATE				
1.6 CNG 16V	71	04/05 →				FCP1521	LUCAS/TRW	
1.7 CDTI 16V	74	12/04 →	FCP1640	ATE				
1.7 CDTI 16V	74	12/04 →				FCP1521	LUCAS/TRW	
1.7 DI 16V	48	10/01 →	FCP1424	LUCAS/TRW				
1.7 DI 16V	48	10/01 →				FCP1521	LUCAS/TRW	
1.7 DTI 16V	55	10/01 →	FCP1424	LUCAS/TRW				
1.7 DTI 16V	55	10/01 →				FCP1521	LUCAS/TRW	
1.8 i 16V	92	09/00 →	FCP1424	LUCAS/TRW				
COMBO Tour								
1.3 CDTI 16V	51	10/04 →	FCP1640	ATE				
1.3 CDTI 16V	51	10/04 →				FCP1521	LUCAS/TRW	
1.3 CDTI 16V	55	10/05 →	FCP1640	ATE				
1.3 CDTI 16V	55	10/05 →				FCP1521	LUCAS/TRW	
1.4	66	10/04 →	FCP1640	ATE				
1.4	66	10/04 →				FCP1521	LUCAS/TRW	
1.6	64	10/01 →	FCP1640	ATE				
1.6	64	10/01 →				FCP1521	LUCAS/TRW	
1.6 CNG	69	06/06 →	FCP1640	ATE				
1.6 CNG	69	06/06 →				FCP1521	LUCAS/TRW	
1.6 CNG	71	04/05 →	FCP1640	ATE				
1.6 CNG	71	04/05 →				FCP1521	LUCAS/TRW	
1.7 CDTI 16V	74	12/04 →	FCP1640	ATE				
1.7 CDTI 16V	74	12/04 →				FCP1521	LUCAS/TRW	
1.7 DI 16V	48	10/01 →	FCP1640	ATE				
1.7 DI 16V	48	10/01 →				FCP1521	LUCAS/TRW	
1.7 DTI 16V	55	10/01 →	FCP1640	ATE				
1.7 DTI 16V	55	10/01 →				FCP1521	LUCAS/TRW	
Commodore (A)								
2.5		01/67 → 12/71	FCP11	ATE				
Commodore (B)								
2.5 Berlina	85, 96	01/72 → 08/77	FCP11	ATE				
2.5 Berlina	85, 96	01/72 → 08/77				FCP2	ATE	
2.5 Berlina	85, 96	08/74 → 08/77	FCP11	ATE				
2.5 Berlina	85, 96	08/74 → 08/77				FCP2	ATE	
2.5 GS	85	01/72 → 08/77	FCP11	ATE				
2.8	103	01/72 → 08/77	FCP11	ATE				
2.8	103	01/72 → 08/77				FCP2	ATE	
2.8	103	08/74 → 08/77	FCP11	ATE				

For material availability see page 16-18 / Per la disponibilità materiali vedere a pagina 16-18

	kW				NOTE			NOTE
...OPEL								
...Commodore (B)								
2.8	103	08/74 → 08/77				FCP2	ATE	
2.8	103, 118	01/72 → 08/77	FCP11	ATE				
2.8	103, 118	01/72 → 08/77				FCP2	ATE	
2.8	103, 118	08/74 → 08/77	FCP11	ATE				
2.8	103, 118	08/74 → 08/77				FCP2	ATE	
Commodore (C)								
2.5	85, 96	08/77 → 07/82	FCP11	ATE				
2.5	85, 96	12/80 → 07/82	FCP11	ATE				
CORSA A								
1.0	33	02/83 → 08/91	FCP173	GM	Vented			
1.0 S		08/91 → 02/93	FCP732	ATE				
1.2	33	07/84 → 08/91	FCP173	GM				
1.2	33	08/91 → 02/93	FCP732	ATE				
1.2	40	02/83 → 06/84	FCP173	GM				
1.3	44, 51	07/84 → 08/91	FCP173	GM				
1.3	51	02/83 → 06/84	FCP173	GM				
1.3	55	09/91 → 03/93	FCP732	ATE				
1.4	44	07/84 → 08/91	FCP173	GM				
1.4	55	07/84 → 08/91	FCP173	GM				
1.4	60	07/84 → 08/91	FCP173	GM				
1.4 N	44, 55	08/91 → 02/93	FCP732	ATE				
1.4 SE	60	08/91 → 02/93	FCP732	ATE				
1.5 D	37	07/84 → 08/91	FCP173	GM				
1.5 D	37	08/91 → 02/93	FCP732	ATE				
1.5 TD	53	08/91 → 02/93	FCP732	ATE				
1.6	55	07/84 → 08/91	FCP173	GM	Vented			
1.6	55	08/91 → 02/93	FCP732	ATE				
1.6	60, 74	07/84 → 08/91	FCP173	GM				
1.6	60, 74	08/91 → 02/93	FCP732	ATE				
CORSA B								
1.0	40	03/93 → 08/00	FCP732	ATE				
1.2	33	03/93 → 08/00	FCP732	ATE				
1.4 N		03/93 → 08/00	FCP732	ATE				
1.5 D	37	03/93 → 08/00	FCP732	ATE				
1.5 TD	49	03/93 → 08/00	FCP732	ATE				
1.6	78, 80	03/93 → 08/00	FCP732	ATE				
1.6 GSi 16V	78	03/93 → 08/00	FCP732	ATE				
1.7 D	44	03/93 → 08/00	FCP732	ATE				
CORSA B (S93)								
1.4 i	40	03/93 → 09/00	FCP732	ATE				
1.4 i	44	03/93 → 09/00	FCP732	ATE				
1.4 i 16V	66	09/94 → 09/00	FCP732	ATE				
1.4 Si	60	03/93 → 09/00	FCP732	ATE				
CORSA C (F08, F68)								
1.0	43	09/00 →	FCP1424	LUCAS/TRW				
1.2	55	09/00 →	FCP1424	LUCAS/TRW				
1.4	66	09/00 →	FCP1424	LUCAS/TRW				
1.4 Twinport	66	06/03 → 12/09	FCP1424	LUCAS/TRW				
1.4 Twinport	66	06/03 → 12/09				FCP1521	LUCAS/TRW	
1.7 CDTI	74	06/03 → 12/09	FCP1640	ATE				
1.7 Di	48	09/00 →	FCP1424	LUCAS/TRW				
1.7 DTi	55	09/00 →	FCP1424	LUCAS/TRW				
1.8 i 16V	92	09/00 →	FCP1424	LUCAS/TRW				
CORSA C Box (F08, W5L)								
1.7 CDTi	74	08/03 →	FCP1640	ATE				
1.7 CDTi	74	08/03 →				FCP1521	LUCAS/TRW	
CORSA D								
1.0	44	07/06 →	FCP1466	BOSCH				
1.0	48	01/10 →	FCP1466	BOSCH				
1.2	51	06/10 →	FCP1466	BOSCH				
1.2	59	07/06 →	FCP1466	BOSCH				
1.2	63	06/10 →	FCP1466	BOSCH				
1.3 CDTi 16v	55	07/06 → 07/08	FCP1466	BOSCH				
1.3 CDTi 16v	55	08/08 →	FCP1467	BOSCH				
1.3 CDTi 16v	66	07/06 → 06/10	FCP1467	BOSCH				
1.3 CDTi 16v	70	11/09 →	FCP1467	BOSCH				
1.4	64	09/09 →	FCP1466	BOSCH				
1.4	66	07/06 →	FCP1466	BOSCH				
1.4	74	06/10 →	FCP1466	BOSCH				

For material availability see page 16-18 / Per la disponibilità materiali vedere a pagina 16-18

FERODO RACING
Updated on November 2020

...OPEL	kW				NOTE			NOTE
...CORSA D								
1.6 16v Turbo (OPC Nurburgring Edition)	154	06/11 →	**FCP1667**	BREMBO				
1.6 16v Turbo (OPC Nurburgring Edition)	154	06/11 →	**FCP1640**	ATE				
1.6 16v Turbo (OPC Nurburgring Edition)	154	06/11 →				**FCP1858**	BOSCH	
1.6 16v Turbo (OPC)	141	02/07 →	**FCP1640**	ATE				
1.6 16v Turbo (OPC)	141	02/07 →				**FCP1858**	BOSCH	
1.6 16v Turbo (OPC)	141	03/07 →	**FCP1667**	BREMBO				
1.6 Turbo	110	02/07 →	**FCP1640**	ATE				
1.6 Turbo	110	02/07 →				**FCP1858**	BOSCH	
CORSA E (X15)								
1.6 Turbo (08, 68)	152	03/15 →	**FCP1667**	BREMBO	OPC version			
1.6 Turbo (08, 68)	152	03/15 →	**FCP1640**	ATE	Pr number : J79			
Diplomat								
2.8 E	118	01/68 → 12/73	**FCP11**	ATE				
2.8 E	118	01/68 → 12/73				**FCP2**	ATE	
2.8 i	97, 103	01/64 → 12/73	**FCP11**	ATE				
5.4 E 16V	169	01/68 → 12/73	**FCP11**	ATE				
5.4 E 16V	169	01/68 → 12/73				**FCP2**	ATE	
5.4 i 16V	169	01/64 → 12/73	**FCP11**	ATE				
Kadett (B)								
1.0		01/67 → 12/73	**FCP3**	ATE				
1.1		01/65 → 12/72	**FCP3**	ATE				
1.2		01/67 → 12/73	**FCP3**	ATE				
1.5	53	01/67 → 12/72	**FCP2**	ATE				
1.9	72	01/67 → 12/72	**FCP2**	ATE				
Kadett (C)								
1.0		01/73 → 07/79	**FCP2**	ATE				
1.2	40, 44	09/73 → 07/79	**FCP2**	ATE				
1.6	55	09/73 → 07/79	**FCP2**	ATE				
1.9 i		01/75 → 07/79	**FCP448**	ATE				
2.0 i Rallye/GTE		01/75 → 07/79	**FCP448**	ATE				
Kadett (D)								
1.0	30, 33	08/79 → 07/83	**FCP173**	GM				
1.2 Saloon/SW Estate	39	08/79 → 07/83	**FCP173**	GM				
1.2 Saloon/SW Estate	40	07/83 → 09/84	**FCP173**	GM				
1.2 SW Estate	40	08/83 → 09/84	**FCP173**	GM				
1.3	44, 55	07/83 → 09/84	**FCP173**	GM				
1.3 Automatic	44, 55	07/83 → 09/84	**FCP173**	GM				
1.3 Automatic, SW Estate	44, 55	08/83 → 09/84	**FCP173**	GM				
1.3 Saloon/SW Estate + Automatic	44, 55	08/79 → 09/84	**FCP173**	GM				
1.3 SW Estate	44, 55	08/83 → 09/84	**FCP173**	GM				
1.6	40, 66	07/83 → 09/84	**FCP173**	GM				
1.6 Saloon/SW Estate	40, 66	08/79 → 09/84	**FCP173**	GM				
1.6 SW Estate	40, 66	08/83 → 09/84	**FCP173**	GM				
1.8	85	08/79 → 07/83	**FCP173**	GM				
Kadett (E)								
1.2 D	40	09/85 → 10/91	**FCP173**	GM				
1.2 Saloon/SW Estate	40	09/84 → 10/91	**FCP173**	GM				
1.3 D	44, 55	09/85 → 10/91	**FCP173**	GM				
1.3 Saloon/SW Estate	44, 55	09/84 → 10/91	**FCP173**	GM				
1.4 D	44	09/85 → 10/91	**FCP173**	GM				
1.4 D	55	09/85 → 10/91	**FCP173**	GM				
1.4 D	60	09/85 → 10/91	**FCP173**	GM				
1.4 Saloon/SW Estate	44, 55	09/84 → 10/91	**FCP173**	GM				
1.5 TD	53	01/89 → 12/91	**FCP173**	GM	Vented			
1.5 TD Caravan		01/85 → 12/91	**FCP173**	GM				
1.6	55	09/84 → 10/91	**FCP173**	GM				
1.6	60	09/84 → 10/91	**FCP173**	GM				
1.6	75	09/84 → 10/91	**FCP173**	GM				
1.6 Break S		09/84 → 10/91	**FCP173**	GM				
1.6 D	40	09/85 → 12/91	**FCP173**	GM				
1.6 D	40	01/89 → 12/91	**FCP173**	GM	Vented			
1.6 D Caravan	40	01/85 → 12/88	**FCP173**	GM				
1.6 D Caravan	40	01/89 → 12/91	**FCP173**	GM				
1.7 D	42	01/89 → 12/91	**FCP173**	GM				
1.7 D Caravan	42	01/85 → 12/91	**FCP173**	GM				
1.8	62	08/83 → 10/91	**FCP173**	GM				
1.8	62	01/85 → 12/91	**FCP584**	ATE				
1.8	66	08/83 → 10/91	**FCP173**	GM				
1.8	66	01/85 → 12/91	**FCP584**	ATE				
1.8	74	08/83 → 10/91	**FCP173**	GM				

For material availability see page 16-18 / Per la disponibilità materiali vedere a pagina 16-18

...OPEL	kW				NOTE			NOTE
...Kadett (E)								
1.8	74	01/85 → 12/91	**FCP584**	ATE				
1.8 D		09/85 → 10/91	**FCP173**	GM				
2.0	85	01/85 → 12/91	**FCP584**	ATE				
2.0 16V	85	09/84 → 08/88	**FCP173**	GM				
2.0 D	85	09/85 → 10/91	**FCP173**	GM				
2.0 Gsi 16V	110, 115	08/88 → 10/91	**FCP584**	ATE				
2.0 Gsi 16V	110, 115	08/88 → 10/91				**FCP586**	ATE	
2.0 Not 16V	85	09/84 → 10/91	**FCP173**	GM				
KADETT E Estate (T85)								
1.8 i	85	09/84 → 08/86	**FCP584**	ATE				
Kapitan								
2.8 E	97	01/68 → 12/73	**FCP11**	ATE				
2.8 E	97	01/68 → 12/73				**FCP2**	ATE	
2.8 Not E	97	01/64 → 12/73	**FCP11**	ATE				
Manta (A)								
1.2	40, 44	10/70 → 08/74	**FCP2**	ATE				
1.2	40, 44	09/74 → 08/75	**FCP116**	ATE				
1.6	51, 55	10/70 → 08/74	**FCP2**	ATE				
1.6	51, 55	09/74 → 08/75	**FCP116**	ATE				
1.9	66	10/70 → 08/74	**FCP2**	ATE				
1.9	66	09/74 → 08/75	**FCP116**	ATE				
1.9	72	10/70 → 08/74	**FCP2**	ATE				
1.9	72	09/74 → 08/75	**FCP116**	ATE				
1.9	81	10/70 → 08/74	**FCP2**	ATE				
1.9	81	09/74 → 08/75	**FCP116**	ATE				
Manta (B)								
1.2	44	09/75 → 08/78	**FCP116**	ATE				
1.2	44	09/78 → 06/88	**FCP173**	GM	Solid			
1.3	44, 55	09/78 → 06/88	**FCP173**	GM	Solid			
1.6	44, 55	09/75 → 08/78	**FCP116**	ATE				
1.6	44, 55	09/78 → 06/88	**FCP173**	GM	Solid			
1.8	66	09/78 → 06/88	**FCP173**	GM	Solid			
1.9	55, 66	09/78 → 06/88	**FCP173**	GM	Solid			
1.9	55	09/75 → 08/78	**FCP116**	ATE				
1.9	66	09/75 → 08/78	**FCP116**	ATE				
1.9	77	09/75 → 08/78	**FCP116**	ATE				
2.0	66	09/75 → 08/78	**FCP116**	ATE				
2.0	66	09/78 → 06/88	**FCP173**	GM	Solid			
2.0	74	09/75 → 08/78	**FCP116**	ATE				
2.0	74	09/78 → 06/88	**FCP173**	GM	Solid			
2.0	81	09/75 → 08/78	**FCP116**	ATE				
2.0	81	09/78 → 06/88	**FCP173**	GM	Solid			
2.4 16V	106	09/78 → 06/88	**FCP173**	GM	Solid			
MANTA B CC (53_, 55_)								
2.0	92	08/81 → 07/88	**FCP4489**	BOSCH				
MERIVA								
1.3 CDTI	51	04/05 → 05/10	**FCP1640**	ATE				
1.3 CDTI	51	04/05 → 05/10				**FCP1521**	LUCAS/TRW	
1.3 CDTI	55	09/03 → 05/10	**FCP1640**	ATE				
1.3 CDTI	55	09/03 → 05/10				**FCP1521**	LUCAS/TRW	
1.4 16V Twinport	66	07/04 → 05/10	**FCP1640**	ATE	Rims 15"			
1.4 16V Twinport	66	07/04 → 05/10				**FCP1521**	LUCAS/TRW	
1.4 16V Twinport LPG	66	07/04 → 05/10	**FCP1640**	ATE	Rims 15"			
1.4 16V Twinport LPG	66	07/04 → 05/10				**FCP1521**	LUCAS/TRW	
1.6	64	05/03 → 05/10	**FCP1424**	LUCAS/TRW				
1.6	64	05/03 → 05/10				**FCP1521**	LUCAS/TRW	
1.6	77	01/06 → 05/10	**FCP1640**	ATE				
1.6	77	01/06 → 05/10				**FCP1521**	LUCAS/TRW	
1.6 16V	74	05/03 → 01/06	**FCP1640**	ATE				
1.6 16V	74	05/03 → 01/06				**FCP1521**	LUCAS/TRW	
1.6 Turbo	132	09/05 → 05/10	**FCP1640**	ATE				
1.6 Turbo	132	09/05 → 05/10				**FCP1521**	LUCAS/TRW	
1.7 CDTI	74	09/03 → 05/10	**FCP1640**	ATE				
1.7 CDTI	74	09/03 → 05/10				**FCP1521**	LUCAS/TRW	
1.7 CDTI	92	09/06 → 05/10	**FCP1640**	ATE				
1.7 CDTI	92	09/06 → 05/10				**FCP1521**	LUCAS/TRW	
1.7 DTI	55	09/03 → 05/10	**FCP1640**	ATE				
1.7 DTI	55	09/03 → 05/10				**FCP1521**	LUCAS/TRW	
1.8	92	05/03 → 05/10	**FCP1640**	ATE				
1.8	92	05/03 → 05/10				**FCP1521**	LUCAS/TRW	

For material availability see page 16-18 / Per la disponibilità materiali vedere a pagina 16-18

FERODO RACING
Updated on November 2020

...OPEL

	kW				NOTE			NOTE
MERIVA B								
1.3 CDTI	55	06/10 →	FCP1640	ATE				
1.3 CDTI	55	06/10 →				FCP1521	LUCAS/TRW	
1.3 CDTI	70	06/10 →	FCP1640	ATE				
1.3 CDTI	70	06/10 →				FCP1521	LUCAS/TRW	
1.4	103	06/10 →	FCP1640	ATE				
1.4	103	06/10 →				FCP1521	LUCAS/TRW	
1.4	88	06/10 →	FCP1640	ATE				
1.4	88	06/10 →				FCP1521	LUCAS/TRW	
1.4	74	06/10 →	FCP1640	ATE				
1.4	74	06/10 →				FCP1521	LUCAS/TRW	
1.4 LPG	88	06/11 →	FCP1640	ATE				
1.4 LPG	88	06/11 →				FCP1521	LUCAS/TRW	
1.7 CDTI	74	06/10 →	FCP1640	ATE				
1.7 CDTI	74	06/10 →				FCP1521	LUCAS/TRW	
1.7 CDTI	81	06/10 →	FCP1640	ATE				
1.7 CDTI	81	06/10 →				FCP1521	LUCAS/TRW	
1.7 CDTI	96	06/10 →	FCP1640	ATE				
1.7 CDTI	96	06/10 →				FCP1521	LUCAS/TRW	
Monza								
2.0	85	01/83 → 07/83	FCP11	ATE				
2.0	85	01/83 → 07/83				FCP2	ATE	
2.0	85	08/83 → 06/86				FCP2	ATE	
2.2	85	08/83 → 06/86				FCP2	ATE	
2.5		01/78 → 12/82	FCP11	ATE				
2.5	96	01/83 → 07/83	FCP11	ATE				
2.5	96	01/83 → 07/83				FCP2	ATE	
2.5	96	08/83 → 06/86				FCP2	ATE	
2.8		01/78 → 12/82	FCP11	ATE				
2.8	103	01/83 → 07/83	FCP11	ATE				
2.8	103	01/83 → 07/83				FCP2	ATE	
2.8	103	08/83 → 06/86				FCP2	ATE	
3.0		01/78 → 12/82	FCP11	ATE				
3.0	115, 132	08/83 → 06/86				FCP2	ATE	
3.0	132	01/83 → 07/83	FCP11	ATE				
3.0	132	01/83 → 07/83				FCP2	ATE	
Olympia								
1.1		01/67 → 12/72	FCP3	ATE				
1.5		01/67 → 12/72	FCP2	ATE				
1.9		01/67 → 12/72	FCP2	ATE				
Omega (A)								
1.8	65, 85	09/86 → 08/88	FCP173	GM				
1.8 Caravan	65, 85	09/89 → 03/94	FCP584	ATE				
1.8 i	65, 85	09/88 → 08/89	FCP173	GM				
2.0	73, 74	09/88 → 03/94	FCP584	ATE				
2.0	85, 90	09/86 → 08/88	FCP173	GM				
2.3 D	54	09/86 → 08/88	FCP173	GM				
2.3 D	74	08/88 → 03/94	FCP584	ATE				
2.3 TD	66	09/86 → 08/88	FCP173	GM				
2.3 TD	74	09/88 → 03/94	FCP584	ATE				
2.4	92	09/86 → 08/88	FCP173	GM				
2.4	92	09/88 → 03/94	FCP584	ATE				
Omega (B)								
2.0 16V	85, 100	04/94 →	FCP685	ATE				
Omega Lotus								
3.6 V6 32V	265, 281	09/90 → 03/94	FRP212	ATE				
3.6 V6 32V	265, 281	09/90 → 03/94				FCP2	ATE	
Rekord (C)								
1.5	40	08/69 → 01/72	FCP2	ATE				
1.7 Sprint	55	01/67 → 12/71	FCP448	ATE				
1.9 Sprint	55, 71	01/67 → 12/71	FCP448	ATE				
Rekord (D)								
1.7	44	01/74 → 04/81	FCP116	ATE				
1.7 i	44	01/77 → 04/81	FCP116	ATE				
1.9	55	01/74 → 04/81	FCP116	ATE				
1.9 i	55	01/77 → 04/81	FCP116	ATE				
2.0	43	01/74 → 04/81	FCP116	ATE				
2.0	66	01/74 → 04/81	FCP116	ATE				
2.0	74	09/75 → 08/77	FCP116	ATE				
2.0	81	01/74 → 04/81	FCP116	ATE				

For material availability see page 16-18 / Per la disponibilità materiali vedere a pagina 16-18

kW				NOTE			NOTE
...OPEL							
...Rekord (D)							
2.1 D	44	01/74 → 04/81	**FCP116**	ATE			
2.3 D	48	01/74 → 04/81	**FCP116**	ATE			
Rekord (E)							
1.7	44	04/81 → 12/86	**FCP173**	GM			
1.7	44	08/82 → 12/86	**FCP173**	GM			
1.8	66	04/81 → 07/82	**FCP173**	GM			
1.8	55	07/82 → 07/86	**FCP173**	GM			
1.8	66	07/82 → 07/86	**FCP173**	GM			
1.8	74	07/82 → 07/86	**FCP173**	GM			
1.9	55	04/81 → 12/86	**FCP173**	GM			
1.9	55	08/82 → 12/86	**FCP173**	GM			
2.0	66	09/77 → 10/82	**FCP173**	GM	Vented		
2.0 D	43	09/77 → 10/82	**FCP173**	GM	Vented		
2.0 E	81	09/77 → 10/84	**FCP173**	GM	Vented		
2.0 i		01/77 → 12/86	**FCP173**	GM			
2.1 D	44	04/81 → 07/86	**FCP173**	GM			
2.1 D	44	07/82 → 07/86	**FCP173**	GM			
2.2	85	07/82 → 07/86	**FCP173**	GM			
2.2 i	85	09/85 → 07/86	**FCP173**	GM			
2.3 D	48	04/81 → 07/82	**FCP173**	GM			
2.3 D	52, 63	07/82 → 07/86	**FCP173**	GM			
SENATOR A (29_)							
2.0 E	85	03/83 → 10/84	**FCP11**	ATE			
2.2 E	85	11/84 → 08/87				**FCP2**	ATE
2.2 TD	63	11/84 → 08/87				**FCP2**	ATE
2.5	85	05/78 → 12/80	**FCP11**	ATE			
2.5	85	05/78 → 12/80				**FCP2**	ATE
2.5 E	100	01/83 → 08/84	**FCP11**	ATE			
2.5 E	100	01/83 → 08/84				**FCP2**	ATE
2.5 E	103	09/84 → 08/87				**FCP2**	ATE
2.8	103	02/78 → 04/81	**FCP11**	ATE			
2.8	103	02/78 → 04/81				**FCP2**	ATE
3.0	110	04/78 → 07/82	**FCP11**	ATE			
3.0	110	04/78 → 07/82				**FCP2**	ATE
3.0	115	09/85 → 08/87				**FCP2**	ATE
3.0 E	132	02/78 → 12/86	**FCP11**	ATE			
3.0 E	132	02/78 → 12/86				**FCP2**	ATE
Signum (F48)							
1.8	103	08/05 → 03/07	**FCP1520**	ATE			
1.8	90	02/03 → 07/05	**FCP1520**	ATE			
1.8	90	02/03 → 07/05				**FCP1540**	ATE
1.9 CDTi	110	04/04 →	**FCP1520**	ATE			
1.9 CDTi	74	08/05 → 02/08	**FCP1520**	ATE			
1.9 CDTi	88	04/04 →	**FCP1520**	ATE			
2.0 DTi	74	05/03 → 04/04	**FCP1520**	ATE			
2.0 DTi	74	05/03 → 04/04				**FCP1540**	ATE
2.0 Turbo	129	05/03 → 12/08	**FCP1520**	ATE			
2.0 Turbo	129	05/03 → 12/08				**FCP1540**	ATE
2.2 DGi	114	02/03 → 09/08	**FCP1520**	ATE			
2.2 DGi	114	02/03 → 09/08				**FCP1540**	ATE
2.2 DTi	92	05/03 → 04/04	**FCP1520**	ATE			
2.2 DTi	92	05/03 → 04/04				**FCP1540**	ATE
3.0 V6 CDTi	130	05/03 → 07/05	**FCP1520**	ATE			
3.0 V6 CDTi	130	05/03 → 07/05				**FCP1540**	ATE
3.2 V6 DGi	155	04/03 → 07/05	**FCP1520**	ATE			
Speedster							
2.2 2.2i	108	10/00 →	**FCP1562**	BREMBO			
2.2 2.2i	108	10/00 →				**FCP1560**	BREMBO
Tigra							
1.4 16V	66	09/94 → 12/00	**FCP732**	ATE			
1.6 16V	78	09/94 → 12/00	**FCP732**	ATE			
Tigra Twin Top							
1.3 CDTi	51	06/04 →	**FCP1424**	LUCAS/TRW			
1.4	66	06/04 →	**FCP1424**	LUCAS/TRW			
1.8	92	06/04 →	**FCP1424**	LUCAS/TRW			

For material availability see page 16-18 / Per la disponibilità materiali vedere a pagina 16-18

FERODO RACING
Updated on November 2020

...OPEL	kW				NOTE			NOTE
Vectra (A)								
1.4		09/88 → 08/91	FCP173	GM				
1.4		09/91 → 09/95	FCP732	ATE				
1.6	55	09/88 → 08/91	FCP173	GM				
1.6	55	09/91 → 09/95	FCP732	ATE				
1.6	60	09/88 → 08/91	FCP173	GM				
1.6	60	09/91 → 09/95	FCP732	ATE				
1.6	65	09/88 → 08/91	FCP173	GM				
1.6	65	09/91 → 09/95	FCP732	ATE				
1.7 D	44	09/88 → 08/91	FCP173	GM				
1.7 D	44	09/91 → 09/95	FCP732	ATE				
1.7 TD	60	09/91 → 09/95	FCP732	ATE				
1.8	65	09/88 → 08/91	FCP173	GM				
1.8	65	09/88 → 08/91	FCP584	ATE				
1.8	65	09/88 → 08/91				FCP586	ATE	
1.8	65, 66	01/88 → 09/95	FCP584	ATE				
1.8	66	09/91 → 09/95	FCP732	ATE				
1.8 S	65, 66	01/88 → 09/95	FCP584	ATE				
1.8 S	65, 66	01/88 → 09/95				FCP586	ATE	
2.0	85	09/88 → 09/95	FCP584	ATE				
2.0	85	09/88 → 09/95				FCP586	ATE	
2.0 D 16V	74	09/88 → 09/95	FCP584	ATE				
2.0 D 16V	74	09/88 → 09/95				FCP586	ATE	
2.0 Turbo 4x4 16V	150	09/92 → 09/95	FCP685	ATE				
2.0 Turbo 4x4 16V	150	09/92 → 09/95				FCP586	ATE	
2.5	85	01/88 → 12/95	FCP584	ATE				
2.5	85	01/88 → 12/95				FCP586	ATE	
2.5 24V	125	09/91 → 09/95	FCP732	ATE				
2.5 4 x 4 24V	125	09/91 → 09/95	FCP584	ATE				
2.5 i		01/93 → 09/95	FCP685	ATE				
2.5 i		01/93 → 09/95				FCP586	ATE	
Vectra (B)								
2.0	100	10/95 → 04/02	FCP1068	ATE				
2.0 16V	100	10/95 → 04/02	FCP1068	ATE				
2.5 V6 24V	125	10/95 → 04/02	FCP1068	ATE				
Vectra (F35)								
1.6	77	10/06 → 08/08	FCP1520	ATE				
1.6 16V	74	06/04 → 09/05	FCP1520	ATE				
1.8	103	08/05 → 08/08	FCP1520	ATE				
1.8	90	07/03 → 09/05	FCP1520	ATE				
1.9 CDTi	110	04/04 →	FCP1520	ATE				
1.9 CDTi	74	06/05 → 08/08	FCP1520	ATE				
1.9 CDTi	88	04/04 →	FCP1520	ATE				
2.0	129	10/03 → 08/08	FCP1520	ATE				
2.0 DTi	74	07/03 → 08/05	FCP1520	ATE				
2.2 DGi	114	07/03 → 08/08	FCP1520	ATE				
2.2 DTi	92	10/03 → 07/04	FCP1520	ATE				
Vectra (F68)								
1.6	74	08/05 → 08/08	FCP1520	ATE				
1.6	77	01/06 → 08/08	FCP1520	ATE				
1.8	103	08/05 → 08/08	FCP1520	ATE				
1.8	81	08/02 → 12/06	FCP1520	ATE				
1.8	81	08/02 → 12/06				FCP1540	ATE	
1.8	90	04/02 → 09/05	FCP1520	ATE				
1.8	90	04/02 → 09/05				FCP1540	ATE	
1.9 CDTi	110	04/04 →	FCP1520	ATE				
1.9 CDTi	74	06/05 → 08/08	FCP1520	ATE				
1.9 CDTi	88	04/04 →	FCP1520	ATE				
2.0	129	02/03 → 08/08	FCP1520	ATE				
2.0 DTi	74	04/02 → 08/05	FCP1520	ATE				
2.0 DTi	74	04/02 → 08/05				FCP1540	ATE	
2.2	108	08/02 → 04/04	FCP1520	ATE				
2.2	108	08/02 → 04/04				FCP1540	ATE	
2.2 DGi	114	05/04 → 08/08	FCP1520	ATE				
2.2 DTi	92	08/02 → 07/04	FCP1520	ATE				
2.2 DTi	92	08/02 → 07/04				FCP1540	ATE	
3.0 CDTi	130	02/03 → 07/05	FCP1520	ATE				
3.0 CDTi	130	02/03 → 07/05				FCP1540	ATE	
3.2	155	08/02 → 07/05	FCP1520	ATE				
3.2	155	08/02 → 07/05				FCP1540	ATE	

For material availability see page 16-18 / Per la disponibilità materiali vedere a pagina 16-18

...OPEL	kW				NOTE			NOTE
Vectra (F69)								
1.6	77	08/05 → 08/08	FCP1520	ATE				
1.6 16V	74	04/02 → 09/05	FCP1520	ATE				
1.8	103	08/05 → 08/08	FCP1520	ATE				
1.8	81	04/02 → 07/03	FCP1520	ATE				
1.8	81	04/02 → 07/03				FCP1540	ATE	
1.8	90	04/02 → 09/05	FCP1520	ATE				
1.8	90	04/02 → 09/05				FCP1540	ATE	
1.9 CDTi	110	04/04 →	FCP1520	ATE				
1.9 CDTi	74	10/05 → 08/08	FCP1520	ATE				
1.9 CDTi	88	04/04 →	FCP1520	ATE				
2.0	129	02/03 → 08/08	FCP1520	ATE				
2.0 DTi	74	04/02 → 08/05	FCP1520	ATE				
2.0 DTi	74	04/02 → 08/05				FCP1540	ATE	
2.2	108	04/02 → 04/04	FCP1520	ATE				
2.2	108	04/02 → 04/04				FCP1540	ATE	
2.2 DGi	114	05/04 → 08/08	FCP1520	ATE				
2.2 DTi	86	04/02 → 12/04	FCP1520	ATE				
2.2 DTi	86	04/02 → 12/04				FCP1540	ATE	
2.2 DTi	92	04/02 → 07/04	FCP1520	ATE				
2.2 DTi	92	04/02 → 07/04				FCP1540	ATE	
3.0 CDTi	130	02/03 → 07/05	FCP1520	ATE				
3.0 CDTi	130	02/03 → 07/05				FCP1540	ATE	
3.2	155	08/02 → 07/05	FCP1520	ATE				
3.2	155	08/02 → 07/05				FCP1540	ATE	
ZAFIRA (M75)								
2.0 Turbo OPC	177	11/05 →	FCP1520	ATE				
ZAFIRA A (F75_)								
1.6 16V	74	04/99 →	FCP1295	ATE				
1.6 16V	74	04/99 → 06/05	FCP1295	ATE				
1.6 16V	74	04/99 →				FCP1294	BOSCH	
1.6 16V	74	04/99 → 06/05				FCP1521	LUCAS/TRW	
1.6 CNG	71	09/01 → 06/05	FCP1295	ATE				
1.6 CNG	71	09/01 → 06/05				FCP1521	LUCAS/TRW	
1.8 16V	85	04/99 →	FCP1295	ATE				
1.8 16V	85	04/99 → 09/00	FCP1295	ATE				
1.8 16V	85	04/99 →				FCP1294	BOSCH	
1.8 16V	85	04/99 → 09/00				FCP1521	LUCAS/TRW	
1.8 16V	92	09/00 → 06/05	FCP1295	ATE				
1.8 16V	92	09/00 → 06/05				FCP1521	LUCAS/TRW	
2.0 DI 16V	60	10/99 → 05/01	FCP1295	ATE				
2.0 DI 16V	60	10/99 → 06/05	FCP1293	ATE	256mm disc			
2.0 DI 16V	60	10/99 → 06/05	FCP1295	ATE	280mm disc			
2.0 DI 16V	60	10/99 → 05/01				FCP1294	BOSCH	
2.0 DI 16V	60	10/99 → 06/05				FCP1521	LUCAS/TRW	
2.0 DTi 16V	74	07/00 →	FCP1295	ATE				
2.0 DTi 16V	74	07/00 →				FCP1294	BOSCH	
2.0 DTi 16V	74	09/00 → 06/05	FCP1295	ATE				
2.0 DTi 16V	74	09/00 → 06/05				FCP1521	LUCAS/TRW	
2.0 OPC	141	09/01 → 06/05	FCP1068	ATE				
2.0 OPC	141	09/01 → 06/05				FCP1521	LUCAS/TRW	
2.0 OPC	147	11/02 → 06/05	FCP1068	ATE				
2.0 OPC	147	11/02 → 06/05				FCP1521	LUCAS/TRW	
2.2 16V	108	09/00 → 06/05	FCP1295	ATE				
2.2 16V	108	09/00 → 06/05				FCP1521	LUCAS/TRW	
2.2 DTI 16V	86	01/02 → 06/05	FCP1295	ATE				
2.2 DTI 16V	86	01/02 → 06/05				FCP1521	LUCAS/TRW	
2.2 DTI 16V	92	01/02 → 06/05	FCP1295	ATE				
2.2 DTI 16V	92	01/02 → 06/05				FCP1521	LUCAS/TRW	
ZAFIRA B (A05)								
1.6	77	07/05 →	FCP1640	ATE				
1.6	77	07/05 →				FCP1521	LUCAS/TRW	
1.6	85	01/08 →	FCP1640	ATE				
1.6	85	01/08 →				FCP1521	LUCAS/TRW	
1.6 CNG	69	01/06 →	FCP1640	ATE				
1.6 CNG	69	01/06 →				FCP1521	LUCAS/TRW	
1.6 CNG Turbo	110	02/09 →	FCP1640	ATE				
1.6 CNG Turbo	110	02/09 →				FCP1521	LUCAS/TRW	
1.7 CDTI	81	01/08 →	FCP1640	ATE				
1.7 CDTI	81	01/08 →				FCP1521	LUCAS/TRW	
1.7 CDTI	92	01/08 →	FCP1640	ATE				
1.7 CDTI	92	01/08 →				FCP1521	LUCAS/TRW	
1.8	103	07/05 →	FCP1640	ATE				
1.8	103	07/05 →				FCP1521	LUCAS/TRW	
1.9 CDTI	110	07/05 →	FCP1640	ATE				

For material availability see page 16-18 / Per la disponibilità materiali vedere a pagina 16-18

FERODO RACING
Updated on November 2020

	kW				NOTE			NOTE
...OPEL								
...ZAFIRA B (A05)								
1.9 CDTI	110	07/05 →				FCP1521	LUCAS/TRW	
1.9 CDTI	74	07/05 →	FCP1640	ATE				
1.9 CDTI	74	07/05 →				FCP1521	LUCAS/TRW	
1.9 CDTI	88	07/05 →	FCP1640	ATE				
1.9 CDTI	88	07/05 →				FCP1521	LUCAS/TRW	
2.0	147	07/05 →	FCP1640	ATE				
2.0	147	07/05 →				FCP1521	LUCAS/TRW	
2.0	177	01/06 →	FCP1520	ATE				
2.0	177	01/06 →				FCP1521	LUCAS/TRW	
2.2	110	07/05 →	FCP1640	ATE				
2.2	110	07/05 →				FCP1521	LUCAS/TRW	
ZAFIRA B Van								
1.6 CNG Turbo	110	02/09 →	FCP1640	ATE				
1.6 CNG Turbo	110	02/09 →				FCP1521	LUCAS/TRW	
1.7 CDTI	81	01/08 →	FCP1640	ATE				
1.7 CDTI	81	01/08 →				FCP1521	LUCAS/TRW	
1.7 CDTI	92	01/08 →	FCP1640	ATE				
1.7 CDTI	92	01/08 →				FCP1521	LUCAS/TRW	
1.8	103	07/05 →	FCP1295	ATE				
1.8	103	07/05 →				FCP1521	LUCAS/TRW	
PEUGEOT								
1007								
1.4 HDi	50	04/05 →	FCP1399	BOSCH				
1.4 i	55	04/05 →	FCP1399	BOSCH				
1.6 i 16V	80	04/05 →	FCP1399	BOSCH				
104								
0.9 / 0.9 Coupe'	33	09/76 → 10/83	FCP253	CITROEN	09/76 ->			
1.0	32	01/73 → 12/88	FCP72	BENDIX				
1.1	49	01/73 → 12/88	FCP72	BENDIX				
1.1 / 1.1 Coupe'	49	09/76 → 06/80	FCP253	CITROEN	09/76 ->			
1.2	42	01/72 → 12/88	FCP72	BENDIX				
1.2	42	08/79 → 06/83	FCP253	CITROEN				
1.4	52	01/72 → 12/88	FCP72	BENDIX				
106								
1.0	33, 37	09/91 → 01/96	FCP393	BENDIX				
1.0	33, 37	09/91 → 01/96	FCP535	ATE				
1.0	37	02/96 →	FCP535	ATE				
1.1	40, 44	09/91 → 12/95	FCP393	BENDIX				
1.1	40, 44	09/91 → 12/95	FCP535	ATE				
1.1	40, 44	01/96 →	FCP535	ATE				
1.3	72	01/94 → 03/96	FCP393	BENDIX				
1.3	72	01/94 → 03/96	FCP535	ATE				
1.3i Rallye	72	01/93 → 04/96	FCP876	ATE				
1.3i Rallye	72	01/93 → 04/96				FCP558	BENDIX	
1.4 D	37	09/91 → 03/96	FCP393	BENDIX				
1.4 D	37	09/91 → 03/96	FCP535	ATE				
1.4 i XSi	68	09/91 → 03/96	FCP393	BENDIX				
1.4 Not XSi	51	09/91 → 03/96	FCP393	BENDIX				
1.4 Not XSi	51	09/91 → 03/96	FCP535	ATE				
1.4 Not XSi	55	09/91 → 03/96	FCP393	BENDIX				
1.4 Not XSi	55	09/91 → 03/96	FCP535	ATE				
1.4 Not XSi	58	09/91 → 03/96	FCP393	BENDIX				
1.4 Not XSi	58	09/91 → 03/96	FCP535	ATE				
1.5 D	42	06/94 → 03/96	FCP393	BENDIX				
1.5 D	42	06/94 → 03/96	FCP535	ATE				
1.6 i	66	01/94 → 03/96	FCP393	BENDIX				
1.6 i	66	01/94 → 03/96	FCP434	LUCAS/TRW				
1.6 i	66	01/94 → 03/96	FCP535	ATE				
1.6 i	66	01/94 → 03/96	FCP876	ATE				
1.6 i 16V	87	01/94 → 03/96	FCP876	ATE				
1.6 i 16V	87	01/94 → 03/96				FCP558	BENDIX	ABS
1.6 i GTi 16V	87	01/96 →	FCP876	ATE				
1.6 i GTi 16V	87	01/96 →				FCP558	BENDIX	ABS
1.6 i Rallye	76	01/96 → 12/99	FCP876	ATE				
1.6 i Rallye	76	01/96 → 12/99				FCP558	BENDIX	ABS

For material availability see page 16-18 / Per la disponibilità materiali vedere a pagina 16-18

...PEUGEOT	kW				NOTE			NOTE
107								
1.0	50	06/05 →	**FCP1790**	BOSCH				
1.4 HDi	40	06/05 →	**FCP1790**	BOSCH				
205								
1.0	32	02/83 → 07/90	**FCP393**	BENDIX				
1.0	32	02/83 → 07/90	**FCP434**	LUCAS/TRW				
1.0	33	07/87 → 07/90	**FCP393**	BENDIX				
1.0	33	07/87 → 07/90	**FCP434**	LUCAS/TRW				
1.0	37	07/87 → 07/90	**FCP393**	BENDIX				
1.0	37	07/87 → 07/90	**FCP434**	LUCAS/TRW				
1.1	36	02/83 → 07/87	**FCP393**	BENDIX				
1.1	36	02/83 → 07/87	**FCP434**	LUCAS/TRW				
1.1	40	02/83 → 07/87	**FCP393**	BENDIX				
1.1	40	02/83 → 07/87	**FCP434**	LUCAS/TRW				
1.1	44	02/83 → 07/87	**FCP393**	BENDIX				
1.1	44	02/83 → 07/87	**FCP434**	LUCAS/TRW				
1.1 i	36	01/85 → 07/87	**FCP393**	BENDIX				
1.1 i	40	01/85 → 07/87	**FCP393**	BENDIX				
1.1 i	44	01/85 → 07/87	**FCP393**	BENDIX				
1.3 Rallye	72, 74	01/87 → 12/93	**FCP393**	BENDIX				
1.4	44	02/83 → 12/94	**FCP393**	BENDIX				
1.4	44	02/83 → 12/94	**FCP434**	LUCAS/TRW				
1.4	58	02/83 → 12/94	**FCP393**	BENDIX				
1.4	58	02/83 → 12/94	**FCP434**	LUCAS/TRW				
1.4	59	02/83 → 12/94	**FCP393**	BENDIX				
1.4	59	02/83 → 12/94	**FCP434**	LUCAS/TRW				
1.6 i CTi, GTi	77, 85	03/84 → 08/92	**FCP393**	BENDIX				
1.6 i CTi, GTi	77, 85	03/84 → 08/92	**FCP434**	LUCAS/TRW				
1.6 i CTi, GTi	77, 85	03/84 → 08/92				**FCP558**	BENDIX	
1.8 D	44	10/83 → 12/94	**FCP393**	BENDIX				
1.8 D	44	10/83 → 12/94	**FCP434**	LUCAS/TRW				
1.8 D	44	01/85 → 07/87	**FCP393**	BENDIX				
1.8 TD	58	10/83 → 12/94	**FCP434**	LUCAS/TRW				
1.8 TD	58	09/91 → 12/94	**FCP393**	BENDIX				
1.8 TD	58	09/91 → 12/94	**FCP434**	LUCAS/TRW				
1.9 D	47	01/83 → 12/94	**FCP393**	BENDIX				
1.9 D	47	01/83 → 12/94	**FCP434**	LUCAS/TRW				
1.9 i CTi, Gentry	77	10/91 → 12/93	**FCP393**	BENDIX				
1.9 i CTi, Gentry	77	10/91 → 12/93	**FCP845**	LUCAS/TRW				
1.9 i CTi, Gentry	77	10/91 → 12/93				**FCP558**	BENDIX	
205 I (741A/C)								
1.6	55	08/86 → 10/87	**FCP393**	BENDIX				
1.6	55	08/86 → 10/87	**FCP434**	LUCAS/TRW				
1.9 GTI	75	03/87 → 10/87	**FCP845**	LUCAS/TRW				
1.9 GTI	75	03/87 → 10/87				**FCP558**	BENDIX	
1.9 GTI	94	10/86 → 10/87	**FCP845**	LUCAS/TRW				
1.9 GTI	94	10/86 → 10/87				**FCP558**	BENDIX	
205 I Convertible (741B, 20D)								
1.6 CJ	65	08/92 → 12/94	**FCP393**	BENDIX				
1.6 CJ	65	08/92 → 12/94	**FCP434**	LUCAS/TRW				
205 II (20A/C)								
1.6	66	08/90 → 07/92	**FCP393**	BENDIX				
1.6	66	08/90 → 07/92	**FCP434**	LUCAS/TRW				
1.9 GTI	75	10/87 → 05/89	**FCP845**	LUCAS/TRW				
1.9 GTI	75	10/87 → 05/89				**FCP558**	BENDIX	
1.9 GTI	88	10/87 → 10/94	**FCP845**	LUCAS/TRW				
1.9 GTI	88	10/87 → 10/94				**FCP558**	BENDIX	
1.9 GTI	94	01/87 → 12/98	**FCP845**	LUCAS/TRW				
1.9 GTI	94	10/87 → 09/98				**FCP558**	BENDIX	
1.9 GTI Cat	75	10/87 → 07/94	**FCP845**	LUCAS/TRW				
1.9 GTI Cat	75	10/87 → 07/94				**FCP558**	BENDIX	
206								
1.1	44	08/98 →	**FCP393**	BENDIX				
1.1	44	08/98 →	**FCP1378**	BOSCH				
1.4	55	08/98 →	**FCP393**	BENDIX				
1.4	55	08/98 →	**FCP1378**	BOSCH				
1.4 HDi	70	09/01 →	**FCP1378**	BOSCH				
1.4 HDi SW	50	07/02 →	**FCP1378**	BOSCH				
1.4 i SW	55	07/02 →	**FCP1378**	BOSCH				
1.6	66	08/98 → 11/00	**FCP393**	BENDIX				
1.6	66	08/98 → 11/00	**FCP1378**	BOSCH				
1.6 CC 16V	80	07/00 →	**FCP1370**	BOSCH				

For material availability see page 16-18 / Per la disponibilità materiali vedere a pagina 16-18

FERODO RACING
Updated on November 2020



kW

...PEUGEOT

					NOTE			NOTE
...206								
1.6 CC 16V	80	07/00 →				FCP558	BENDIX	
1.6 CC 16V	80	09/00 →	FCP1370	BOSCH				
1.6 CC 16V	80	09/00 →				FCP558	BENDIX	
1.6 i , CC 16V	80	09/00 →	FCP1399	BOSCH				
1.6 i , CC 16V	80	09/00 →				FCP558	BENDIX	
1.6 i SW 16V	80	07/02 →	FCP1399	BOSCH				
1.6 i SW 16V	80	07/02 →				FCP558	BENDIX	
1.6 Kit car Super 1600		01/02 →	FRP1077	BREMBO				
1.6 Kit car Super 1600		01/02 →				FCP809	LUCAS/TRW	
1.6 XS Coupe	120	01/02 →	FRP219					
1.6 XS Coupe	120	01/02 →				FCP558	BENDIX	
1.9 D	51	08/98 → 11/00	FCP393	BENDIX				
1.9 D	51	08/98 → 11/00	FCP1378	BOSCH				
2.0 16V, CC 16V	99	08/98 →	FCP1370	BOSCH				
2.0 16V, CC 16V	99	08/98 →	FCP1378	BOSCH				
2.0 16V, CC 16V	99	08/98 →				FCP558	BENDIX	
2.0 Coupe circuit + rallye	130	01/02 →	FRP219					
2.0 Coupe circuit + rallye	130	01/02 →				FCP558	BENDIX	
2.0 HDi	66	08/98 →	FCP1370	BOSCH				
2.0 HDi	66	08/98 →				FCP558	BENDIX	
2.0 HDi	66	12/99 →	FCP1370	BOSCH				
2.0 HDi	66	12/99 →	FCP1399	BOSCH				
2.0 HDi	66	12/99 →				FCP558	BENDIX	
2.0 HDi SW	66	07/02 →	FCP1399	BOSCH				
2.0 HDi SW	66	07/02 →				FCP558	BENDIX	
2.0 i S16, CC 16V	100	04/99 →	FCP1370	BOSCH				
2.0 i S16, CC 16V	100	04/99 →	FCP1399	BOSCH				
2.0 i S16, CC 16V	100	04/99 →				FCP558	BENDIX	
2.0 RC		01/99 →	FCP1467	BOSCH				
2.0 XS 16V	100	01/02 →	FCP1399	BOSCH				
2.0 XS 16V	100	01/02 →				FCP558	BENDIX	
2.0 XS 16V	100	07/02 →	FCP1399	BOSCH				
207								
1.6 RC	128	02/07 →	FCP1641	ATE				
1.6 RC	128	02/07 →				FCP1491	LUCAS/TRW	
1.6 Turbo	110	02/07 →	FCP1641	ATE				
1.6 Turbo	110	02/07 →				FCP1469	BOSCH	
2.0 S2000 - Asphalt		01/07 →	FRP3088	BREMBO				
2.0 S2000 - Asphalt		01/07 →				FRP3101	BREMBO	
2.0 S2000 - Gravel		01/07 →	FRP3101	BREMBO				
2.0 S2000 - Gravel		01/07 →				FRP3101	BREMBO	
Rally R3		01/09 →	FRP3107	AP RACING				
Rally R3		01/09 →				FCP1469	BOSCH	
207 (WA_, WC_)								
1.4	53	02/06 →	FCP1399	Bosch				
1.4 16V	65	02/06 →	FCP1399	Bosch				
1.4 16V	65	02/06 →				FCP1491	LUCAS/TRW	
1.4 16V	70	03/11 →	FCP1399	Bosch	for vehicles without ESP			
1.4 16V	70	03/11 →				FCP1491	LUCAS/TRW	
1.4 HDi	50	02/06 →	FCP1399	Bosch				
1.6 HDi	66	02/06 →	FCP1399	Bosch	266mm disc			
1.6 HDi	66	02/06 →				FCP1491	LUCAS/TRW	
1.6 HDi	68	11/09 →	FCP1399	Bosch	266mm disc			
1.6 HDi	68	11/09 →				FCP1491	LUCAS/TRW	
207 Saloon								
1.4	54	12/07 →	FCP1399	Bosch	266mm disc			
1.4 Bioflex	60	11/08 →	FCP1399	Bosch				
207 Sw (WK_)								
1.4	54	06/07 →	FCP1399	Bosch				
1.6 HDi	68	11/09 →	FCP1399	Bosch				
1.6 HDi	68	11/09 →				FCP1491	LUCAS/TRW	
207 Van								
1.4 HDi	50	04/07 →	FCP1399	Bosch				
1.6 HDi	66	04/07 →	FCP1399	Bosch	266mm disc			
1.6 HDi	66	04/07 →				FCP1491	LUCAS/TRW	

For material availability see page 16-18 / Per la disponibilità materiali vedere a pagina 16-18

...PEUGEOT

	kW				NOTE			NOTE
208								
1.0	50	03/12 →	**FCP1399**	Bosch	266mm disc			
1.0	50	03/12 →	**FCP1641**	ATE	302mm disc			
1.0	50	03/12 →				**FCP1491**	LUCAS/TRW	
1.2	60	03/12 →	**FCP1399**	Bosch	266mm disc			
1.2	60	03/12 →	**FCP1641**	ATE	302mm disc			
1.2	60	03/12 →				**FCP1491**	LUCAS/TRW	
1.4	70	03/12 →	**FCP1399**	Bosch	266mm disc			
1.4	70	03/12 →	**FCP1641**	ATE	302mm disc			
1.4	70	03/12 →				**FCP1491**	LUCAS/TRW	
1.4 HDi	50	03/12 →	**FCP1399**	Bosch	266mm disc			
1.4 HDi	50	03/12 →	**FCP1641**	ATE	302mm disc			
1.4 HDi	50	03/12 →				**FCP1491**	LUCAS/TRW	
1.6	115	03/12 →	**FCP1399**	Bosch	266mm disc			
1.6	115	03/12 →	**FCP1641**	ATE	302mm disc			
1.6	115	03/12 →				**FCP1491**	LUCAS/TRW	
1.6	88	03/12 →	**FCP1399**	Bosch	266mm disc			
1.6	88	03/12 →	**FCP1641**	ATE	302mm disc			
1.6	88	03/12 →				**FCP1491**	LUCAS/TRW	
1.6 GTi	147	08/12 →	**FCP1399**	Bosch	266mm disc			
1.6 GTi	147	08/12 →	**FCP1641**	ATE	302mm disc			
1.6 GTi	147	08/12 →				**FCP1491**	LUCAS/TRW	
1.6 GTi	153	10/14 →	**FCP1348**	BREMBO	323mm disc			
1.6 GTi	153	10/14 →	**FCP1399**	Bosch	266mm disc			
1.6 GTi	153	10/14 →	**FCP1641**	ATE	302mm disc			
1.6 GTi	153	10/14 →				**FCP1491**	LUCAS/TRW	
1.6 HDi	68	03/12 →	**FCP1399**	Bosch	266mm disc			
1.6 HDi	68	03/12 →	**FCP1641**	ATE	302mm disc			
1.6 HDi	68	03/12 →				**FCP1491**	LUCAS/TRW	
1.6 HDi	84	03/12 →	**FCP1399**	Bosch	266mm disc			
1.6 HDi	84	03/12 →	**FCP1641**	ATE	302mm disc			
1.6 HDi	84	03/12 →				**FCP1491**	LUCAS/TRW	
R2 Rally		01/13 →	**FRP1077**	ALCON				
R2 Rally		01/13 →				**FCP809**	LUCAS/TRW	
304								
1.1	43	01/79 → 12/81	**FCP72**	BENDIX				
1.3	47	08/77 → 03/81	**FCP72**	BENDIX				
1.4 D		01/79 → 12/81	**FCP72**	BENDIX				
1.4 D M20	33	08/77 → 10/79	**FCP72**	BENDIX				
1.5 D	36	01/79 → 12/81	**FCP72**	BENDIX				
305								
		07/82 → 04/91	**FCP434**	LUCAS/TRW				
All ->Ch.8987000		07/82 → 04/91	**FCP393**	BENDIX				
All Ch.8987001->		07/82 → 04/91	**FCP393**	BENDIX				
305 I (581A)								
1.3	44	11/77 → 09/82	**FCP72**	BENDIX				
1.5	54	11/79 → 09/82	**FCP72**	BENDIX				
1.5	65	05/80 → 09/82	**FCP72**	BENDIX				
1.5 Diesel	36	11/77 → 09/82	**FCP72**	BENDIX				
306								
1.1	44	02/93 → 03/97	**FCP393**	BENDIX				
1.4	55	02/93 → 03/97	**FCP393**	BENDIX				
1.4	55	02/93 → 08/00	**FCP876**	ATE	ABS			
1.4	55	03/97 → 08/00	**FCP1378**	BOSCH				
1.4 i		01/93 → 04/97	**FCP876**	ATE				
1.4 i	55	09/95 → 03/97	**FCP393**	BENDIX				
1.4 i	55	09/95 → 03/97	**FCP876**	ATE				
1.4 SW Estate	55	03/97 → 08/00	**FCP1112**	LUCAS/TRW	ABS			
1.6	66	02/93 → 08/95	**FCP393**	BENDIX				
1.6	66	02/93 → 08/00	**FCP876**	ATE				
1.6 i	66	09/95 → 02/97	**FCP393**	BENDIX				
1.6 i	66	09/95 → 02/97	**FCP876**	ATE				
1.6 SW Estate	66	03/97 → 08/00	**FCP1112**	LUCAS/TRW	ABS			
1.8	44, 74	02/93 → 02/97	**FCP393**	BENDIX				
1.8	44, 74	02/93 → 08/00	**FCP876**	ATE				
1.8 16V	82	03/97 → 08/00	**FCP1112**	LUCAS/TRW				
1.8 D	44, 74	02/93 → 02/97	**FCP393**	BENDIX				
1.8 D	44, 74	02/93 → 08/00	**FCP876**	ATE				
1.8 D	44, 74	01/95 → 02/97	**FCP393**	BENDIX				
1.8 D	44, 74	01/95 → 02/97	**FCP876**	ATE				
1.8 i	44, 74	01/95 → 02/97	**FCP393**	BENDIX				
1.8 i	44, 74	01/95 → 02/97	**FCP876**	ATE				
1.9 D	50	05/99 → 08/00	**FCP1112**	LUCAS/TRW				
1.9 D	51	05/99 → 08/00	**FCP1112**	LUCAS/TRW				

For material availability see page 16-18 / Per la disponibilità materiali vedere a pagina 16-18

FERODO RACING
Updated on November 2020

...PEUGEOT

	kW				NOTE			NOTE
...306								
1.9 D	66	05/99 → 08/00	**FCP1112**	LUCAS/TRW				
1.9 D Saloon	50	03/97 → 08/00	**FCP876**	ATE				
1.9 D Saloon	51	03/97 → 08/00	**FCP876**	ATE				
1.9 D Saloon/SW Estate	66	03/97 → 08/00	**FCP876**	ATE				
1.9 D SW Estate	50	03/97 → 08/00	**FCP1112**	LUCAS/TRW	ABS			
1.9 D SW Estate	51	03/97 → 08/00	**FCP1112**	LUCAS/TRW	ABS			
1.9 D SW Estate	66	03/97 → 08/00	**FCP1112**	LUCAS/TRW	ABS			
1.9 TD		05/99 → 08/00	**FCP1112**	LUCAS/TRW				
1.9 TD	66, 69	02/93 → 02/97	**FCP393**	BENDIX				
1.9 TD	66, 69	02/93 → 08/00	**FCP876**	ATE				
1.9 TD	66, 69	01/95 → 02/97	**FCP393**	BENDIX				
1.9 TD	66, 69	01/95 → 02/97	**FCP876**	ATE				
1.9 TD SW Estate	66, 69	03/97 → 08/00	**FCP1112**	LUCAS/TRW				
2.0 HDi Saloon/SW Estate	66	01/99 → 08/00	**FCP1112**	LUCAS/TRW				
2.0 HDi Saloon/SW Estate	66	01/99 → 08/00	**FCP1370**	BOSCH				
2.0 HDi Saloon/SW Estate	66	01/99 → 08/00				**FCP558**	BENDIX	
2.0 i GTI 16V	120	03/97 → 08/00	**FCP406**	LUCAS/TRW				
2.0 i GTI 16V	120	03/97 → 08/00	**FCP565**	LUCAS/TRW				
2.0 i GTI 16V	120	03/97 → 08/00	**FCP1112**	LUCAS/TRW				
2.0 i GTI 16V	120	03/97 → 08/00				**FCP558**	BENDIX	
306 (7B, N3, N5)								
2.0 S16	110	02/93 → 02/97	**FCP1133**	LUCAS/TRW				
2.0 S16	110	02/93 → 02/97				**FCP558**	BENDIX	
2.0 S16	110	03/97 → 05/01	**FCP1112**	LUCAS/TRW				
2.0 S16	110	03/97 → 05/01				**FCP558**	BENDIX	
2.0 S16	112	02/93 → 02/97	**FCP1133**	LUCAS/TRW				
2.0 S16	112	02/93 → 02/97				**FCP558**	BENDIX	
2.0 S16	112	03/97 → 05/01	**FCP1112**	LUCAS/TRW				
2.0 S16	112	03/97 → 05/01				**FCP558**	BENDIX	
2.0 ST	89	02/93 → 02/97	**FCP1133**	LUCAS/TRW				
2.0 ST	89	02/93 → 02/97				**FCP558**	BENDIX	
2.0 ST	89	03/97 → 05/01	**FCP1112**	LUCAS/TRW				
2.0 ST	89	03/97 → 05/01				**FCP558**	BENDIX	
306 Convertible (7D, N3, N5)								
2.0 16V	97	03/97 → 04/02	**FCP1063**	LUCAS/TRW				
306 Hatchback (7A, 7C, N3, N5)								
1.9 D	50	06/94 → 05/01	**FCP393**	BENDIX				
1.9 D	50	06/94 → 05/01	**FCP876**	ATE				
1.9 D	51	04/93 → 05/99	**FCP393**	BENDIX				
1.9 D	51	04/93 → 05/99	**FCP876**	ATE				
1.9 D	69	04/93 → 04/97	**FCP393**	BENDIX				
1.9 D	69	04/93 → 04/97	**FCP876**	ATE				
1.9 DT	66	05/93 → 05/01	**FCP393**	BENDIX				
1.9 DT	66	05/93 → 05/01	**FCP876**	ATE				
2.0 16V	97	03/97 → 05/01	**FCP1063**	LUCAS/TRW				
307								
1.4 HDi		03/01 →	**FCP1467**	BOSCH				
1.4 HDi		03/01 →				**FCP541**	LUCAS/TRW	
1.4 HDi	51	03/01 →	**FCP1399**	BOSCH				
1.4 HDi	51	03/01 →				**FCP558**	BENDIX	
1.4 i		03/01 →	**FCP1467**	BOSCH				
1.4 i		03/01 →				**FCP541**	LUCAS/TRW	
1.4 i	55	03/01 →	**FCP1399**	BOSCH				
1.4 i	55	03/01 →				**FCP558**	BENDIX	
1.6 i 16V	80	03/01 →	**FCP1467**	BOSCH				
1.6 i 16V	80	03/01 →				**FCP541**	LUCAS/TRW	
1.6 i SW 16V	80	03/01 →	**FCP1467**	BOSCH				
1.6 i SW 16V	80	03/01 →				**FCP541**	LUCAS/TRW	
2.0 HDi	79	03/01 →	**FCP1467**	BOSCH				
2.0 HDi	79	03/01 →				**FCP541**	LUCAS/TRW	
2.0 Hdi SW	79	03/01 →	**FCP1467**	BOSCH				
2.0 Hdi SW	79	03/01 →				**FCP541**	LUCAS/TRW	
2.0 i 16V	100	03/01 →	**FCP1467**	BOSCH				
2.0 i 16V	100	03/01 →				**FCP541**	LUCAS/TRW	
2.0 i SW 16V	79	03/01 →	**FCP1467**	BOSCH				
2.0 i SW 16V	79	03/01 →				**FCP541**	LUCAS/TRW	

For material availability see page 16-18 / Per la disponibilità materiali vedere a pagina 16-18

...PEUGEOT	kW				NOTE			NOTE
308								
1.6 GTi 270	200	06/15 →	**FRP3135**	ALCON				
309								
1.1	40, 43	09/85 → 08/92	**FCP393**	BENDIX				
1.1	40, 43	09/85 → 08/92	**FCP434**	LUCAS/TRW				
1.1 i	40, 44	07/89 → 08/92	**FCP393**	BENDIX				
1.2		01/87 → 10/91	**FCP393**	BENDIX				
1.2		01/87 → 10/91	**FCP434**	LUCAS/TRW				
1.2 i		07/89 → 10/91	**FCP393**	BENDIX				
1.3	47, 52	09/85 → 10/91	**FCP393**	BENDIX				
1.3	47, 52	09/85 → 10/91	**FCP434**	LUCAS/TRW				
1.3 i	47	06/89 → 10/91	**FCP393**	BENDIX				
1.4		01/85 → 05/91	**FCP434**	LUCAS/TRW				
1.4	48	06/91 → 02/93	**FCP393**	BENDIX				
1.4	48	06/91 → 02/93	**FCP434**	LUCAS/TRW				
1.4	50	06/91 → 02/93	**FCP393**	BENDIX				
1.4	50	06/91 → 02/93	**FCP434**	LUCAS/TRW				
1.4	55	06/91 → 02/93	**FCP393**	BENDIX				
1.4	55	06/91 → 02/93	**FCP434**	LUCAS/TRW				
1.8		01/85 → 08/89	**FCP434**	LUCAS/TRW				
1.8 D	43	09/89 → 02/93	**FCP393**	BENDIX				
1.8 D	43	09/89 → 02/93	**FCP434**	LUCAS/TRW				
1.8 D	44	09/89 → 02/93	**FCP393**	BENDIX				
1.8 D	44	09/89 → 02/93	**FCP434**	LUCAS/TRW				
1.8 D	58	09/89 → 02/93	**FCP393**	BENDIX				
1.8 D	58	09/89 → 02/93	**FCP434**	LUCAS/TRW				
1.9 D	47	07/86 → 02/93	**FCP393**	BENDIX				
1.9 D	47	07/86 → 02/93	**FCP434**	LUCAS/TRW				
1.9 i GTi	89, 96	02/87 → 02/93	**FCP845**	LUCAS/TRW				
1.9 i GTi	89, 96	02/87 → 02/93				**FCP558**	BENDIX	
309 I (10C, 10A)								
1.6	53	08/87 → 07/89	**FCP393**	BENDIX				
1.6	53	08/87 → 07/89	**FCP434**	LUCAS/TRW				
1.6	55	10/85 → 07/89	**FCP393**	BENDIX				
1.6	55	10/85 → 07/89	**FCP434**	LUCAS/TRW				
1.6	76	11/85 → 09/88	**FCP393**	BENDIX				
1.6	76	11/85 → 09/88	**FCP434**	LUCAS/TRW				
1.6 Cat	55	09/86 → 12/89	**FCP393**	BENDIX				
1.6 Cat	55	09/86 → 12/89	**FCP434**	LUCAS/TRW				
309 II (3C, 3A)								
1.6	65	07/89 → 12/93	**FCP393**	BENDIX				
1.6	65	07/89 → 12/93	**FCP434**	LUCAS/TRW				
405								
1.4 i Saloon	50	07/92 → 10/96	**FCP393**	BENDIX				
1.4 i Saloon	50	07/92 → 10/96				**FCP541**	LUCAS/TRW	
1.4 i Saloon	55	07/92 → 10/96	**FCP393**	BENDIX				
1.4 i Saloon	55	07/92 → 10/96				**FCP541**	LUCAS/TRW	
1.4 i Saloon	58	07/92 → 10/96	**FCP393**	BENDIX				
1.4 i Saloon	58	07/92 → 10/96				**FCP541**	LUCAS/TRW	
1.4 i SW Estate	55	02/94 → 02/97	**FCP393**	BENDIX				
1.4 i SW Estate	55	02/94 → 02/97				**FCP541**	LUCAS/TRW	
1.4 i SW Estate	55, 58	07/92 → 01/94	**FCP393**	BENDIX				
1.4 i SW Estate	55, 58	07/92 → 01/94				**FCP541**	LUCAS/TRW	
1.4 Saloon	50	06/87 → 10/96	**FCP393**	BENDIX				
1.4 Saloon	50	06/87 → 10/96	**FCP1133**	LUCAS/TRW				
1.4 Saloon	55	06/87 → 10/96	**FCP393**	BENDIX				
1.4 Saloon	55	06/87 → 10/96	**FCP1133**	LUCAS/TRW				
1.4 Saloon	58	06/87 → 10/96	**FCP393**	BENDIX				
1.4 Saloon	58	06/87 → 10/96	**FCP1133**	LUCAS/TRW				
1.4 SW Estate	55, 58	06/87 → 02/97	**FCP393**	BENDIX				
1.4 SW Estate	55, 58	06/87 → 02/97	**FCP1133**	LUCAS/TRW				
1.6 SW Estate	65, 66	02/94 → 02/97	**FCP393**	BENDIX				
1.6 SW Estate	65, 66	02/94 → 02/97	**FCP1133**	LUCAS/TRW				
1.6 SW Estate	65, 66	02/94 → 02/97				**FCP541**	LUCAS/TRW	
1.7 TD Saloon & SW Estate		06/88 → 06/90	**FCP393**	BENDIX				
1.7 TD Saloon & SW Estate		06/88 → 06/90				**FCP541**	LUCAS/TRW	
1.8 i Saloon	74	01/92 → 10/96	**FCP393**	BENDIX				
1.8 i Saloon	74	01/92 → 10/96				**FCP541**	LUCAS/TRW	
1.8 i SW Estate	74	01/92 → 01/94	**FCP393**	BENDIX				
1.8 i SW Estate	74	02/94 → 02/97	**FCP393**	BENDIX				
1.8 i SW Estate	74	02/94 → 02/97				**FCP541**	LUCAS/TRW	
1.8 Saloon	74	06/87 → 10/96	**FCP393**	BENDIX				
1.8 Saloon	74	06/87 → 10/96	**FCP1133**	LUCAS/TRW				
1.8 Saloon	74	06/87 → 10/96				**FCP541**	LUCAS/TRW	

For material availability see page 16-18 / Per la disponibilità materiali vedere a pagina 16-18

FERODO RACING
Updated on November 2020

...PEUGEOT

	kW				NOTE			NOTE
...405								
1.8 SW Estate	74	06/87 → 02/97	**FCP393**	BENDIX				
1.8 SW Estate	74	06/87 → 02/97	**FCP1133**	LUCAS/TRW				
1.8 SW Estate	74	06/87 → 02/97				**FCP541**	LUCAS/TRW	
1.8 TD Saloon	66	07/90 → 08/92	**FCP393**	BENDIX				
1.8 TD Saloon	66	07/90 → 08/92				**FCP541**	LUCAS/TRW	
1.8 TD Saloon	66	09/92 → 10/96	**FCP393**	BENDIX				
1.8 TD Saloon	66	09/92 → 10/96				**FCP541**	LUCAS/TRW	
1.8 TD SW Estate	66	07/90 → 08/92	**FCP393**	BENDIX				
1.8 TD SW Estate	66	07/90 → 08/92				**FCP541**	LUCAS/TRW	
1.8 TD SW Estate	66	09/92 → 01/94	**FCP393**	BENDIX				
1.8 TD SW Estate	66	09/92 → 01/94				**FCP541**	LUCAS/TRW	
1.8 TD Saloon	66	06/87 → 10/96	**FCP393**	BENDIX				
1.8 TD Saloon	66	06/87 → 10/96	**FCP1133**	LUCAS/TRW				
1.8 TD Saloon	66	06/87 → 10/96				**FCP541**	LUCAS/TRW	
1.8 TD SW Estate	66	06/87 → 01/94	**FCP393**	BENDIX				
1.8 TD SW Estate	66	06/87 → 01/94	**FCP1133**	LUCAS/TRW				
1.8 TD SW Estate	66	06/87 → 01/94				**FCP541**	LUCAS/TRW	
1.9 i Saloon	70	07/92 → 10/96	**FCP393**	BENDIX				
1.9 i Saloon	70	07/92 → 10/96				**FCP541**	LUCAS/TRW	
1.9 i Saloon	80	07/92 → 10/96	**FCP393**	BENDIX				
1.9 i Saloon	80	07/92 → 10/96				**FCP541**	LUCAS/TRW	
1.9 i Saloon	88	07/92 → 10/96	**FCP393**	BENDIX				
1.9 i Saloon	88	07/92 → 10/96				**FCP541**	LUCAS/TRW	
1.9 MI 16 16V	108, 118	01/87 → 12/92	**FCP1133**	LUCAS/TRW				
1.9 MI 16 16V	108, 118	01/87 → 12/92				**FCP541**	LUCAS/TRW	
1.9 Saloon	70	06/87 → 10/96	**FCP393**	BENDIX				
1.9 Saloon	70	06/87 → 10/96	**FCP1133**	LUCAS/TRW				
1.9 Saloon	70	06/87 → 10/96				**FCP541**	LUCAS/TRW	
1.9 Saloon	80	06/87 → 10/96	**FCP393**	BENDIX				
1.9 Saloon	80	06/87 → 10/96	**FCP1133**	LUCAS/TRW				
1.9 Saloon	80	06/87 → 10/96				**FCP541**	LUCAS/TRW	
1.9 Saloon	88	06/87 → 10/96	**FCP393**	BENDIX				
1.9 Saloon	88	06/87 → 10/96	**FCP1133**	LUCAS/TRW				
1.9 Saloon	88	06/87 → 10/96				**FCP541**	LUCAS/TRW	
1.9 SW Estate	50	02/94 → 02/97	**FCP393**	BENDIX				
1.9 SW Estate	50	02/94 → 02/97	**FCP1133**	LUCAS/TRW				
1.9 SW Estate	50	02/94 → 02/97				**FCP541**	LUCAS/TRW	
1.9 SW Estate	77, 80	06/87 → 01/94	**FCP393**	BENDIX				
1.9 SW Estate	77, 80	06/87 → 01/94	**FCP1133**	LUCAS/TRW				
1.9 SW Estate	77, 80	06/87 → 01/94				**FCP541**	LUCAS/TRW	
1.9 TD	92	08/92 → 12/96	**FCP1133**	LUCAS/TRW				
1.9 TD	92	08/92 → 12/96				**FCP541**	LUCAS/TRW	
2.0 i MI 16 16V	110	08/92 → 12/96	**FCP1133**	LUCAS/TRW				
2.0 i MI 16 16V	110	08/92 → 12/96				**FCP541**	LUCAS/TRW	
2.0 Saloon, SW Estate	89	08/92 → 02/97	**FCP1133**	LUCAS/TRW				
2.0 Saloon, SW Estate	89	08/92 → 02/97				**FCP541**	LUCAS/TRW	
405 I (15B)								
1.6	53	07/87 → 12/92	**FCP393**	BENDIX				
1.6	53	07/87 → 12/92				**FCP541**	LUCAS/TRW	
1.6	55	07/87 → 06/88	**FCP393**	BENDIX				
1.6	55	07/87 → 06/88				**FCP541**	LUCAS/TRW	
1.6	65	07/87 → 12/92	**FCP393**	BENDIX				
1.6	65	07/87 → 12/92				**FCP541**	LUCAS/TRW	
1.6	66	10/89 → 12/92	**FCP393**	BENDIX				
1.6	66	10/89 → 12/92				**FCP541**	LUCAS/TRW	
1.6	69	01/87 → 12/92	**FCP393**	BENDIX				
1.6	69	01/87 → 12/92				**FCP541**	LUCAS/TRW	
1.6 4x4	65	04/88 → 07/92	**FCP393**	BENDIX				
1.6 4x4	65	04/88 → 07/92				**FCP541**	LUCAS/TRW	
405 I Break (15E)								
1.6	65	10/88 → 08/92	**FCP393**	BENDIX				
1.6	65	10/88 → 08/92	**FCP1133**	LUCAS/TRW				
1.6	65	10/88 → 08/92				**FCP541**	LUCAS/TRW	
1.6	66	10/88 → 08/92	**FCP393**	BENDIX				
1.6	66	10/88 → 08/92	**FCP1133**	LUCAS/TRW				
1.6	66	10/88 → 08/92				**FCP541**	LUCAS/TRW	
1.6	68	05/88 → 07/92	**FCP393**	BENDIX				
1.6	68	05/88 → 07/92	**FCP1133**	LUCAS/TRW				
1.6	68	05/88 → 07/92				**FCP541**	LUCAS/TRW	
1.6 SRi 4x4	65	04/88 → 07/92	**FCP393**	BENDIX				
1.6 SRi 4x4	65	04/88 → 07/92	**FCP1133**	LUCAS/TRW				
1.6 SRi 4x4	65	04/88 → 07/92				**FCP541**	LUCAS/TRW	

For material availability see page 16-18 / Per la disponibilità materiali vedere a pagina 16-18

...PEUGEOT	kW				NOTE			NOTE
405 II (4B)								
1.6	65	08/92 → 10/95	**FCP393**	BENDIX				
1.6	65	08/92 → 10/95	**FCP1133**	LUCAS/TRW				
1.6	65	08/92 → 10/95				**FCP541**	LUCAS/TRW	
1.6	66	08/92 → 05/97	**FCP393**	BENDIX				
405 II Break (4E)								
1.6	65	08/92 → 10/96	**FCP393**	LUCAS/TRW				
1.6	65	08/92 → 10/96				**FCP541**	LUCAS/TRW	
1.6	68	08/92 → 08/94	**FCP393**	LUCAS/TRW				
1.6	68	08/92 → 08/94				**FCP541**	LUCAS/TRW	
406								
2.0 Coupe 16V	99	05/97 →	**FCP1063**	LUCAS/TRW				
2.0 HDi	66, 81	04/99 →	**FCP1063**	LUCAS/TRW				
2.0 Saloon, SW Estate	99	10/95 →	**FCP1063**	LUCAS/TRW				
2.1 TD Saloon, SW Estate	80	10/95 → 10/97	**FCP1063**	LUCAS/TRW				
3.0 Coupe V6 24V	140	02/97 →	**FCP1348**	BREMBO				
406 (8B)								
1.9 TD	66	01/96 → 05/04	**FCP1063**	LUCAS/TRW				
1.9 TD	68	01/96 → 05/04	**FCP1063**	LUCAS/TRW				
1.9 TD	69	10/95 → 10/97	**FCP1063**	LUCAS/TRW				
2.0 16V	100	08/00 → 06/04	**FCP1063**	LUCAS/TRW				
2.0 16V	99	01/99 → 08/00	**FCP1063**	LUCAS/TRW				
2.0 16V	97	11/95 → 05/04	**FCP1063**	LUCAS/TRW				
2.0 16V HPi	103	05/01 → 05/04	**FCP1063**	LUCAS/TRW				
2.0 HDi 110	79	08/01 → 05/04	**FCP1063**	LUCAS/TRW				
2.0 HDI 110	80	06/98 → 08/01	**FCP1063**	LUCAS/TRW				
2.0 HDI 90	66	02/99 → 05/04	**FCP1063**	LUCAS/TRW				
2.0 Turbo	108	04/96 → 05/04	**FCP1063**	LUCAS/TRW				
2.1 TD 12V	80	01/96 → 05/04	**FCP1063**	LUCAS/TRW				
2.2	116	07/00 → 05/04	**FCP1063**	LUCAS/TRW				
2.2 HDi	98	03/00 → 05/04	**FCP1063**	LUCAS/TRW				
3.0 24V	140	10/96 → 05/04	**FCP1063**	LUCAS/TRW				
3.0 V6	152	03/00 → 05/04	**FCP1063**	LUCAS/TRW				
406 Break (8E/F)								
1.8 16V	85	10/00 → 10/04	**FCP1063**	LUCAS/TRW				
1.8 16V	81	10/96 → 10/00	**FCP1063**	LUCAS/TRW				
1.9 D	55	10/96 → 10/04	**FCP1063**	LUCAS/TRW				
1.9 TD	66	10/96 → 10/04	**FCP1063**	LUCAS/TRW				
2.0 16V	100	10/00 → 10/04	**FCP1063**	LUCAS/TRW				
2.0 16V	99	01/99 → 10/00	**FCP1063**	LUCAS/TRW				
2.0 16V	97	10/96 → 10/04	**FCP1063**	LUCAS/TRW				
2.0 16V HPi	103	05/01 → 10/04	**FCP1063**	LUCAS/TRW				
2.0 HDi 110	79	08/01 → 10/04	**FCP1063**	LUCAS/TRW				
2.0 HDI 110	80	02/99 → 04/04	**FCP1063**	LUCAS/TRW				
2.0 HDI 90	66	02/99 → 10/04	**FCP1063**	LUCAS/TRW				
2.0 Turbo	108	10/96 → 10/04	**FCP1063**	LUCAS/TRW				
2.1 TD 12V	80	10/96 → 10/04	**FCP1063**	LUCAS/TRW				
2.2	116	07/00 → 10/04	**FCP1063**	LUCAS/TRW				
2.2 HDI	98	03/00 → 10/04	**FCP1063**	LUCAS/TRW				
3.0 24V	140	10/96 → 10/04	**FCP1063**	LUCAS/TRW				
3.0 V6	152	03/00 → 10/04	**FCP1063**	LUCAS/TRW				
406 Coupe (8C)								
2.0 16V	100	10/00 → 12/04	**FCP1063**	LUCAS/TRW				
2.0 16V	99	01/99 → 10/00	**FCP1063**	LUCAS/TRW				
2.0 16V	97	03/97 → 12/04	**FCP1063**	LUCAS/TRW				
2.0 16V	99	04/99 → 09/04	**FCP1063**	LUCAS/TRW				
2.2	116	03/02 → 12/04	**FCP1063**	LUCAS/TRW				
2.2 HDI	98	03/00 → 12/04	**FCP1063**	LUCAS/TRW				
407								
1.6 1.6 Hdi 110 FAP, SW Estate 16V	80	05/04 →	**FCP1725**	LUCAS/TRW				
1.6 1.6 HDi 110 FAP	80	05/04 →	**FCP1725**	LUCAS/TRW				
1.8 1.08	85	05/04 →	**FCP1725**	LUCAS/TRW				
1.8 1.8 16V	125	09/05 →	**FCP1725**	LUCAS/TRW				
1.8 1.8i ,SW Estate 16V	85	05/04 →	**FCP1725**	LUCAS/TRW				
2 2.0 HDi 135 FAP	100	05/04 →	**FCP1725**	LUCAS/TRW				
2.0 2.0 16V	140	09/05 →	**FCP1725**	LUCAS/TRW				
2.0 2.0 Hdi 135 FAP, SW Estate 16V	100	05/04 →	**FCP1725**	LUCAS/TRW				
2.0 2.00	100	05/04 →	**FCP1725**	LUCAS/TRW				
2.0 2.0i 16V	100	05/04 →	**FCP1725**	LUCAS/TRW				

For material availability see page 16-18 / Per la disponibilità materiali vedere a pagina 16-18

FERODO RACING
Updated on November 2020



kW

					NOTE			NOTE
...PEUGEOT								
407 Estate								
1.8 1.8 16V	125	09/05 →	**FCP1725**	LUCAS/TRW				
2.0 2.0 16V	140	09/05 →	**FCP1725**	LUCAS/TRW				
607								
2.2 16V		01/99 →	**FCP1063**	LUCAS/TRW				
2.2 HDi 16V	100	01/99 →	**FCP1063**	LUCAS/TRW				
607 (9D, 9U)								
2.0	100	02/00 →	**FCP1063**	LUCAS/TRW				
2.0 HDi	79	03/01 → 07/04	**FCP1063**	LUCAS/TRW				
2.0 HDI	80	05/00 →	**FCP1063**	LUCAS/TRW				
2.2 16V	116	02/00 →	**FCP1063**	LUCAS/TRW				
2.2 HDI	98	02/00 →	**FCP1063**	LUCAS/TRW				
806								
1.9 TD	68	01/94 → 07/02	**FCP565**	LUCAS/TRW				
1.9 TD	68	01/94 → 07/02				**FCP850**	ATE	
2.0	89	01/94 → 07/02	**FCP565**	LUCAS/TRW				
2.0	89	01/94 → 07/02				**FCP850**	ATE	
2.0 (Turbo)	104	10/95 → 07/02	**FCP565**	LUCAS/TRW				
2.0 (Turbo)	104	10/95 → 07/02				**FCP850**	ATE	
2.0 HDi	80	05/99 → 07/02	**FCP565**	LUCAS/TRW				
2.0 HDi	80	05/99 → 07/02				**FCP850**	ATE	
2.1 TD	80	04/96 → 07/02	**FCP565**	LUCAS/TRW				
2.1 TD	80	04/96 → 07/02				**FCP850**	ATE	
Enterprise								
All Models		01/94 →	**FCP876**	ATE				
Expert								
1.9 D 900 Kg	51	10/95 →	**FCP565**	LUCAS/TRW				
1.9 TD 900 Kg	66, 69	10/95 →	**FCP565**	LUCAS/TRW				
Partner								
1.1	44	07/96 → 09/01	**FCP1112**	LUCAS/TRW				
1.4	55	07/96 → 09/01	**FCP1112**	LUCAS/TRW				
1.6 i 16V	80	10/00 → 09/01	**FCP1112**	LUCAS/TRW				
1.7 D		09/96 → 09/01	**FCP1112**	LUCAS/TRW				
1.8 D	44	07/96 → 09/01	**FCP1112**	LUCAS/TRW				
1.9 D	51	07/96 → 09/01	**FCP1112**	LUCAS/TRW				
2.0 HDi	66	01/00 → 09/01	**FCP1112**	LUCAS/TRW				
Partner/Ranch								
1.1 i	44	07/96 → 09/01	**FCP1112**	LUCAS/TRW				
1.1 i	44	10/01 →	**FCP1399**	BOSCH				
1.4 i	55	07/96 → 09/01	**FCP1112**	LUCAS/TRW				
1.4 i	55	10/01 →	**FCP1399**	BOSCH				
1.6 i 16V	80	10/01 →	**FCP1399**	BOSCH				
1.8 i	66	05/97 → 09/01	**FCP1112**	LUCAS/TRW				
1.9 D	51	07/96 → 09/01	**FCP1112**	LUCAS/TRW				
1.9 D	51	10/01 →	**FCP1399**	BOSCH				
2.0 HDi	66	12/99 → 09/01	**FCP1112**	LUCAS/TRW				
2.0 HDi	66	10/01 →	**FCP1399**	BOSCH				
RCZ								
1.6 THP 270	199	06/13 →	**FRP3135**	ALCON	Versione R - KtypeNr=52427			
PININFARINA								
SPIDEREUROPA (DS)								
2000	76	11/84 → 11/85				**FCP22**	BENDIX	
2000	77	03/82 → 09/85				**FCP22**	BENDIX	
2000 Volumex	99	06/83 → 11/85				**FCP22**	BENDIX	

PIPER

	kW				NOTE			NOTE
PIPER								
GTT								
1.7		01/68 → 12/74	FCP809	LUCAS/TRW				
1.7		01/68 → 12/74				FCP809	LUCAS/TRW	
POLSKI								
125								
1.3	50	01/75 →	FCP29	BENDIX				
PX Linda 160		01/84 →	FCP29	BENDIX				
PX1300, 1500		01/75 → 12/84	FCP29	BENDIX				
Baltic								
		06/78 →	FCP29	BENDIX				
Polonez								
1.5		06/78 → 06/90	FCP29	BENDIX				
PONTIAC								
2+2								
		01/69 → 12/81	FRP3057	KELGATE				
		01/82 → 12/86	FRP3058	KELGATE				
Bonneville								
4.9 16V	112	01/75 → 12/77	FRP3057	KELGATE				
5.7 16V	125	01/75 → 12/77	FRP3057	KELGATE				
6.6 16V	105	01/75 → 12/77	FRP3057	KELGATE				
Cataline								
		01/69 → 12/81	FRP3057	KELGATE				
		01/82 → 12/86	FRP3058	KELGATE				
Firebird								
		01/82 → 12/88	FRP3058	KELGATE				
		01/82 → 12/88				FRP3058	KELGATE	
3.8	86	01/72 → 12/81	FRP3057	KELGATE				
4.1	83	01/72 → 12/81	FRP3057	KELGATE				
4.9 16V	112	01/72 → 12/81	FRP3057	KELGATE				
5.0 16V	119	01/72 → 12/81	FRP3057	KELGATE				
5.7 16V	132	01/72 → 12/81	FRP3057	KELGATE				
6.6 16V	138	01/72 → 12/81	FRP3057	KELGATE				
7.5 16V	140	01/72 → 12/81	FRP3057	KELGATE				
Firebird, Trans Am								
		01/69 → 12/78	FRP3057	KELGATE				
		01/79 → 12/81	FRP3057	KELGATE				
		01/79 → 12/81				FRP3058	KELGATE	
Grand Am								
		01/69 → 12/77	FRP3057	KELGATE				
		01/78 → 12/81	FRP3058	KELGATE				
Grand Prix								
		01/69 → 12/77	FRP3057	KELGATE				
		01/78 → 12/87	FRP3058	KELGATE				
Grandville								
		01/69 → 12/81	FRP3057	KELGATE				
		01/82 → 12/86	FRP3058	KELGATE				
GTO								
		01/69 → 12/77	FRP3057	KELGATE				
		01/78 → 12/81	FRP3058	KELGATE				
Judge								
		01/69 → 12/77	FRP3057	KELGATE				
		01/78 → 12/81	FRP3058	KELGATE				

For material availability see page 16-18 / Per la disponibilità materiali vedere a pagina 16-18

FERODO RACING
Updated on November 2020

	kW				NOTE			NOTE
...PONTIAC								
Le Mans								
4.1	83	01/75 → 12/77	**FRP3057**	KELGATE				
5.7 16V	114	01/75 → 12/77	**FRP3057**	KELGATE				
6.6 16V	105	01/75 → 12/77	**FRP3057**	KELGATE				
6.6 16V	105	01/78 → 12/81	**FRP3058**	KELGATE				
Parisienne								
		01/84 → 12/89	**FRP3057**	KELGATE				
Phoenix								
		01/69 → 12/79	**FRP3057**	KELGATE				
Safari Wagon								
2.8		01/84 → 12/89	**FRP3057**	KELGATE				
Solstice								
2.4 VVTi	132	03/05 →				**FCP1931**	ATE	
Tempest								
		01/69 → 12/77	**FRP3057**	KELGATE				
		01/78 → 12/81	**FRP3058**	KELGATE				
Ventura								
		01/69 → 12/79	**FRP3057**	KELGATE				
PORSCHE								
1600								
1.6		01/64 → 12/65	**FCP2**	ATE				
1.6		01/64 → 12/65				**FCP3**	ATE	
356								
1.6 C, SC		01/63 → 12/66	**FCP2**	ATE				
1.6 C, SC		01/63 → 12/66				**FCP3**	ATE	
718 BOXSTER (982)								
2.0	220	04/16 →	**FCP4805**	BREMBO	For vehicles without ceramic discs			
2.0	220	04/16 →				**FCP1308**	BREMBO	For vehicles without ceramic brakes
2.5 GTS	269	10/17 →	**FCP4805**	BREMBO	For vehicles without ceramic discs			
2.5 GTS	269	10/17 →				**FCP1308**	BREMBO	
S 2.5	257	04/16 →	**FCP4805**	BREMBO				
S 2.5	257	04/16 →				**FCP1308**	BREMBO	For vehicles without ceramic brakes
718 CAYMAN (982)								
2.0	220	04/16 →	**FCP4805**	BREMBO				
2.0	220	04/16 →				**FCP1308**	BREMBO	For vehicles without ceramic brakes
2.5 GTS	269	10/17 →	**FCP4805**	BREMBO	For vehicles without ceramic discs			
2.5 GTS	269	10/17 →				**FCP1308**	BREMBO	
S 2.5	257	04/16 →	**FCP4805**	BREMBO				
S 2.5	257	04/16 →				**FCP1308**	BREMBO	For vehicles without ceramic brakes
904								
2.0 Carrera GTS		01/63 → 12/65	**FCP2**	ATE				
2.0 Carrera GTS		01/63 → 12/65				**FCP3**	ATE	
908/1								
3.0		01/68 → 12/71	**FCP11**	ATE				
3.0		01/68 → 12/71				**FCP11**	ATE	
911								
2.0		01/65 → 12/69	**FCP2**	ATE				
2.0		01/65 → 12/69				**FCP3**	ATE	
2.2		01/70 → 12/71	**FCP11**	ATE				
2.2		01/70 → 12/71				**FCP2**	ATE	
2.3		01/72 → 12/73	**FCP11**	ATE				
2.3		01/72 → 12/73				**FCP2**	ATE	
3.3 (Turbo)	235	01/90 → 06/91	**FCP560**	ATE				
3.3 (Turbo)	235	01/90 → 06/91				**FCP451**	ATE	
3.3 (Turbo)	235	07/91 → 09/93	**FCP891**	ATE				
3.3 (Turbo)	235	07/91 → 09/93				**FCP451**	ATE	
3.3 ,Sport (Turbo)	243	09/77 → 06/89	**FCP451**	ATE				
3.3 ,Sport (Turbo)	243	09/77 → 06/89				**FCP451**	ATE	
3.6 (Turbo)	300	03/95 → 04/98	**FCP891**	ATE				
3.6 (Turbo)	300	03/95 → 04/98				**FCP560**	ATE	

For material availability see page 16-18 / Per la disponibilità materiali vedere a pagina 16-18

...PORSCHE

...911

	kW				NOTE				NOTE
3.6 ,New Carrera (Turbo)	184	12/93 → 12/97	FCP560	ATE					
3.6 ,New Carrera (Turbo)	184	12/93 → 12/97				FCP451	ATE		
3.6 Carrera 2, 4	184	09/89 → 09/93	FCP451	ATE					
3.6 Carrera 2, 4	184	09/89 → 09/93				FCP451	ATE		
3.6 Carrera RS	191	09/91 → 06/93	FCP560	ATE					
3.6 Carrera RS	191	09/91 → 06/93				FCP451	ATE		
3.8 Carrera	210, 221	06/95 →	FCP560	ATE					
3.8 Carrera	210, 221	06/95 →				FCP451	ATE		
GT3 R Race Car		01/19 →	FRP3155	AP RACING					
GT3 R Race Car		01/19 →				FRP1078	AP RACING		

911 (991)

3.0 Carrera 4 GTS	331	03/17 →				FCP4713	BREMBO	For vehicles without ceramic discs	
3.0 Carrera 4S	309	11/15 →	FCP4955	BREMBO	For vehicles without ceramic discs				
3.0 Carrera 4S	309	11/15 →				FCP4713	BREMBO		
3.0 Carrera GTS	331	03/17 →				FCP4713	BREMBO	For vehicles without ceramic discs	
3.0 Carrera S	309	11/15 →	FCP4955	BREMBO	For vehicles without ceramic discs				
3.0 Carrera S	309	11/15 →				FCP4713	BREMBO		
3.4 Carrera	257	12/11 →	FCP4955	BREMBO					
3.4 Carrera	257	12/11 →				FCP4713	BREMBO		
3.4 Carrera	261	12/11 →	FCP4955	BREMBO					
3.4 Carrera	261	12/11 →				FCP4713	BREMBO		
3.4 Carrera 4	257	11/12 →	FCP4955	BREMBO					
3.4 Carrera 4	257	11/12 →				FCP4713	BREMBO		
3.4 Carrera 4	261	09/12 →	FCP4955	BREMBO					
3.4 Carrera 4	261	09/12 →				FCP4713	BREMBO		
3.8 Carrera 4S	294	12/11 →	FCP4955	BREMBO					
3.8 Carrera 4S	294	12/11 →				FCP4713	BREMBO	type I450 - For vehicles without ceramic discs	
3.8 Carrera 4S	304	12/11 →	FCP4955	BREMBO					
3.8 Carrera 4S / 4 GTS	316	11/12 →	FCP4955	BREMBO					
3.8 Carrera 4S / 4 GTS	316	11/12 →				FCP4713	BREMBO	type I450 - For vehicles without ceramic discs	
3.8 Carrera S	294	12/11 →	FCP4955	BREMBO					
3.8 Carrera S	294	12/11 →				FCP4713	BREMBO	type I450 - For vehicles without ceramic discs	
3.8 Carrera S	304	12/11 →	FCP4955	BREMBO					
3.8 Carrera S / GTS	316	07/12 →	FCP4955	BREMBO					
3.8 Carrera S / GTS	316	07/12 →				FCP4713	BREMBO	type I450 - For vehicles without ceramic discs	
3.8 GT3	350	08/13 →	FCP4664	BREMBO					
3.8 GT3	350	08/13 →				FCP4665	BREMBO		
3.8 Turbo	383	09/13 →	FCP4664	BREMBO					
3.8 Turbo	383	09/13 →				FCP4665	BREMBO		
3.8 Turbo S	412	09/13 →	FCP4664	BREMBO					
3.8 Turbo S	412	09/13 →				FCP4665	BREMBO		
GT3 Cup		01/13 →	FRP3151	PFC					
GT3 Cup		01/13 →				FRP3152	PFC		
GT3 Cup MR		01/13 →	FRP3151	PFC					
GT3 Cup MR		01/13 →				FRP3152	PFC		

911 (991.2)

4.0 GT3	368	01/17 →	FCP4664	BREMBO	Not for ceramic brake discs				
4.0 GT3	368	01/17 →				FCP4665	BREMBO	Not for ceramica discs	
4.0 GT3 RS	382	01/18 →	FCP4664	BREMBO	Not for ceramic discs				
4.0 GT3 RS	382	01/18 →				FCP4665	BREMBO	Not for ceramic discs	

911 (996)

3.4 Carrera	221	09/97 → 09/01	FRP3051	BREMBO					
3.4 Carrera	221	09/97 → 09/01				FCP1308	BREMBO		
3.4 Carrera	235	05/01 → 08/05	FRP3051	BREMBO					
3.4 Carrera	235	05/01 → 08/05				FCP1308	BREMBO		
3.4 Carrera 4	221	09/97 → 09/01	FRP3051	BREMBO					
3.4 Carrera 4	221	09/97 → 09/01				FCP1308	BREMBO		
3.4 Carrera 4	235	05/01 → 08/05	FRP3051	BREMBO					
3.4 Carrera 4	235	05/01 → 08/05				FCP1308	BREMBO		
3.6 Carrera	235	10/01 → 08/05	FRP3051	BREMBO					
3.6 Carrera	235	10/01 → 08/05				FCP1308	BREMBO		
3.6 Carrera 4	235	10/01 → 08/05	FRP3051	BREMBO					
3.6 Carrera 4	235	10/01 → 08/05				FCP1308	BREMBO		
3.6 Carrera 4S	254	02/03 → 08/05	FRP3050	BREMBO					
3.6 Carrera 4S	254	02/03 → 08/05				FRP3051	BREMBO		
3.6 Carrera S	254	02/03 → 08/05	FRP3051	BREMBO					
3.6 Carrera S	254	02/03 → 08/05				FCP1308	BREMBO		
3.6 GT2	340	04/01 → 08/05	FRP3050	BREMBO	Model year to 12.02				
3.6 GT2	340	04/01 → 08/05	FRP3075	BREMBO	Model year from 01.04				
3.6 GT2	340	04/01 → 08/05				FRP3051	BREMBO		
3.6 GT2	355	10/03 → 08/05	FRP3075	BREMBO	For vehicles without ceramic discs				
3.6 GT2	355	10/03 → 08/05				FRP3051	BREMBO		
3.6 GT3	265	03/99 → 08/05	FRP3050	BREMBO	Model year to 12.02				
3.6 GT3	265	03/99 → 08/05	FRP3075	BREMBO	Model year from 01.04				

For material availability see page 16-18 / Per la disponibilità materiali vedere a pagina 16-18

...PORSCHE

	kW				NOTE			NOTE
...911 (996)								
3.6 GT3	265	03/99 → 08/05				FRP3051	BREMBO	
3.6 GT3	280	03/03 → 08/05	FRP3075	BREMBO	For vehicles without ceramic discs			
3.6 GT3	280	03/03 → 08/05				FRP3051	BREMBO	
3.6 S	331	08/04 → 08/05	FRP3050	BREMBO				
3.6 S	331	08/04 → 08/05				FRP3051	BREMBO	
3.6 Turbo 4	309	06/00 → 08/05	FRP3050	BREMBO	Model year to 12.02			
3.6 Turbo 4	309	06/00 → 08/05	FRP3075	BREMBO	Model year from 01.04			
3.6 Turbo 4	309	06/00 → 08/05				FRP3051	BREMBO	
3.6 Turbo 4S	331	02/03 → 08/05	FRP3075	BREMBO	For vehicles without ceramic discs			
3.6 Turbo 4S	331	02/03 → 08/05				FRP3051	BREMBO	
911 (997)								
3.6 Carrera	235	08/04 → 07/05	FRP3051	BREMBO				
3.6 Carrera	235	08/04 → 07/05				FCP1308	BREMBO	
3.6 Carrera	239	07/04 → 12/08	FRP3051	BREMBO				
3.6 Carrera	239	07/04 → 12/08				FCP1308	BREMBO	
3.6 Carrera	254	06/08 → 12/11	FCP4805	BREMBO				
3.6 Carrera	254	06/08 → 12/11				FRP3143	BREMBO	
3.6 Carrera 4	239	07/04 → 12/08	FRP3051	BREMBO				
3.6 Carrera 4	239	07/04 → 12/08				FCP1308	BREMBO	
3.6 Carrera 4	254	06/08 → 12/12	FCP4805	BREMBO				
3.6 Carrera 4	254	06/08 → 12/12				FRP3143	BREMBO	
3.6 GT2	390	09/07 →	FRP3075	BREMBO				
3.6 GT2	390	09/07 →				FRP3143	BREMBO	
3.6 GT2	390	09/07 →				FRP3095	BREMBO	
3.6 GT3	305	03/06 → 12/09	FRP3075	BREMBO				
3.6 GT3	305	03/06 → 12/09				FRP3143	BREMBO	For vehicles without ceramic discs
3.6 Turbo	353	03/06 → 12/09	FRP3075	BREMBO				
3.6 Turbo	353	03/06 → 12/09				FRP3143	BREMBO	
3.6 Turbo	353	03/06 → 12/09				FRP3095	BREMBO	
3.8 Carrera 4 GTS	300	06/09 → 12/12	FRP3050	BREMBO				
3.8 Carrera 4 GTS	300	06/09 → 12/12				FRP3051	BREMBO	
3.8 Carrera 4S	283	06/08 → 12/12	FRP3050	BREMBO				
3.8 Carrera 4S	283	06/08 → 12/12				FRP3051	BREMBO	
3.8 Carrera 4S	261	07/04 → 12/08	FRP3050	BREMBO				
3.8 Carrera 4S	261	07/04 → 12/08				FRP3051	BREMBO	
3.8 Carrera 4S	280	08/05 → 12/08	FRP3050	BREMBO				
3.8 Carrera 4S	280	08/05 → 12/08				FRP3051	BREMBO	
3.8 Carrera GTS	300	06/09 → 12/11	FRP3050	BREMBO				
3.8 Carrera GTS	300	06/09 → 12/11				FRP3051	BREMBO	
3.8 Carrera S	283	06/08 → 12/11	FRP3050	BREMBO				
3.8 Carrera S	283	06/08 → 12/11				FRP3051	BREMBO	
3.8 Carrera S	261	07/04 → 12/08	FRP3050	BREMBO				
3.8 Carrera S	261	07/04 → 12/08				FRP3051	BREMBO	
3.8 Carrera S	280	08/05 → 12/08	FRP3050	BREMBO				
3.8 Carrera S	280	08/05 → 12/08				FRP3051	BREMBO	
3.8 GT3	320	05/09 → 12/11	FRP3075	BREMBO				
3.8 GT3	320	05/09 → 12/11				FRP3143	BREMBO	
3.8 GT3	320	05/09 → 12/11				FRP3095	BREMBO	
3.8 GT3 CUP		01/05 → 12/09	FRP3096	BREMBO				
3.8 GT3 CUP		01/05 → 12/09				FRP3143	BREMBO	
3.8 GT3 CUP		01/05 → 12/09				FRP3095	BREMBO	
3.8 GT3 CUP		01/10 →	FRP3075	BREMBO				
3.8 GT3 CUP		01/10 →				FRP3143	BREMBO	
3.8 GT3 Cup Grand Am Spec		01/07 →	FRP3123	BREMBO				
3.8 GT3 Cup Grand Am Spec		01/07 →				FRP302	BREMBO	
3.8 GT3 RSR		01/07 →	FRP3031	BREMBO				
3.8 GT3 RSR		01/07 →				FRP1078	BREMBO	
3.8 GT3 RSR		12/09 →	FRP3075	BREMBO				
3.8 GT3 RSR		12/09 →				FRP3143	BREMBO	
3.8 GT3 RSR		12/09 →				FRP3095	BREMBO	
3.8 Turbo	368	09/09 → 12/12	FRP3075	BREMBO				
3.8 Turbo	368	09/09 → 12/12				FRP3143	BREMBO	For vehicles without ceramic discs
3.8 Turbo S	390	02/10 → 12/12	FRP3075	BREMBO				
3.8 Turbo S	390	02/10 → 12/12				FRP3143	BREMBO	For vehicles without ceramic discs
911 Convertible (991)								
3.0 Carrera 4 GTS	331	03/17 →				FCP4713	BREMBO	For vehicles without ceramic discs
3.0 Carrera 4S	309	11/15 →	FCP4955	BREMBO	For vehicles without ceramic discs			
3.0 Carrera 4S	309	11/15 →				FCP4713	BREMBO	
3.0 Carrera GTS	331	03/17 →				FCP4713	BREMBO	For vehicles without ceramic discs
3.0 Carrera S	309	11/15 →	FCP4955	BREMBO	For vehicles without ceramic discs			
3.0 Carrera S	309	11/15 →				FCP4713	BREMBO	
3.4 Carrera	257	03/12 →	FCP4955	BREMBO				
3.4 Carrera	257	03/12 →				FCP4713	BREMBO	
3.4 Carrera	261	03/12 →	FCP4955	BREMBO				
3.4 Carrera	261	03/12 →				FCP4713	BREMBO	

For material availability see page 16-18 / Per la disponibilità materiali vedere a pagina 16-18

...PORSCHE

...911 Convertible (991)

3.4 Carrera 4	257	11/12 →		FCP4955	BREMBO				
3.4 Carrera 4	257	11/12 →					FCP4713	BREMBO	
3.4 Carrera 4	261	03/12 →		FCP4955	BREMBO				
3.4 Carrera 4	261	03/12 →					FCP4713	BREMBO	
3.8 Carrera 4 GTS	304	03/12 →	12/12	FRP3050	BREMBO				
3.8 Carrera 4 GTS	304	03/12 →	12/12				FRP3051	BREMBO	
3.8 Carrera 4S / 4 GTS	316	11/12 →		FCP4955	BREMBO				
3.8 Carrera 4S / 4 GTS	316	11/12 →					FCP4713	BREMBO	type I450 - For vehicles without ceramic discs
3.8 Carrera GTS	304	03/12 →	12/12	FRP3050	BREMBO				
3.8 Carrera GTS	304	03/12 →	12/12				FRP3051	BREMBO	
3.8 Carrera S	294	03/12 →		FCP4955	BREMBO				
3.8 Carrera S	294	03/12 →					FCP4713	BREMBO	type MA103 - For vehicles without ceramic discs
3.8 Carrera S	294	11/12 →		FCP4955	BREMBO				
3.8 Carrera S	294	11/12 →					FCP4713	BREMBO	type I450 - For vehicles without ceramic discs
3.8 Carrera S / GTS	316	07/12 →		FCP4955	BREMBO				
3.8 Carrera S / GTS	316	07/12 →					FCP4713	BREMBO	type I450 - For vehicles without ceramic discs
3.8 Turbo	383	12/13 →		FCP4664	BREMBO				
3.8 Turbo	383	12/13 →					FCP4665	BREMBO	
3.8 Turbo S	412	12/13 →		FCP4664	BREMBO				
3.8 Turbo S	412	12/13 →					FCP4665	BREMBO	

911 Convertible (996)

3.4 Carrera	221	02/98 →	09/01	FRP3051	BREMBO				
3.4 Carrera	221	02/98 →	09/01				FCP1308	BREMBO	
3.4 Carrera	235	05/01 →	08/05	FRP3051	BREMBO				
3.4 Carrera	235	05/01 →	08/05				FCP1308	BREMBO	
3.4 Carrera 4	221	02/98 →	09/01	FRP3051	BREMBO				
3.4 Carrera 4	221	02/98 →	09/01				FCP1308	BREMBO	
3.4 Carrera 4	235	05/01 →	08/05	FRP3051	BREMBO				
3.4 Carrera 4	235	05/01 →	08/05				FCP1308	BREMBO	
3.6 Carrera	235	10/01 →	08/05	FRP3051	BREMBO				
3.6 Carrera	235	10/01 →	08/05				FCP1308	BREMBO	
3.6 Carrera 4	235	10/01 →	08/05	FRP3051	BREMBO				
3.6 Carrera 4	235	10/01 →	08/05				FCP1308	BREMBO	
3.6 Carrera 4S	254	06/02 →	08/05	FRP3075	BREMBO	For vehicles without ceramic discs			
3.6 Carrera 4S	254	06/02 →	08/05				FRP3051	BREMBO	
3.6 Carrera S	254	06/02 →	08/05	FRP3051	BREMBO				
3.6 Carrera S	254	06/02 →	08/05				FCP1308	BREMBO	
3.6 S	331	08/04 →	08/05	FRP3050	BREMBO				
3.6 S	331	08/04 →	08/05				FRP3051	BREMBO	
3.6 Turbo 4	309	10/03 →	08/05	FRP3075	BREMBO	For vehicles without ceramic discs			
3.6 Turbo 4	309	10/03 →	08/05				FRP3051	BREMBO	
3.6 Turbo 4S	331	10/03 →	08/05	FRP3075	BREMBO	For vehicles without ceramic discs			
3.6 Turbo 4S	331	10/03 →	08/05				FRP3051	BREMBO	

911 Convertible (997)

3.6 Carrera	235	04/05 →	07/05	FRP3051	BREMBO				
3.6 Carrera	235	04/05 →	07/05				FCP1308	BREMBO	
3.6 Carrera	239	04/05 →	12/08	FRP3051	BREMBO				
3.6 Carrera	239	04/05 →	12/08				FCP1308	BREMBO	
3.6 Carrera	254	06/08 →	12/11	FCP4805	BREMBO				
3.6 Carrera	254	06/08 →	12/11				FRP3143	BREMBO	
3.6 Carrera 4	239	04/05 →	12/08	FRP3051	BREMBO				
3.6 Carrera 4	239	04/05 →	12/08				FCP1308	BREMBO	
3.6 Carrera 4	254	06/08 →	12/12	FCP4805	BREMBO				
3.6 Carrera 4	254	06/08 →	12/12				FRP3143	BREMBO	
3.6 Carrera 4	395	09/10 →	12/11	FCP4805	BREMBO				
3.8 Carrera 4 GTS	300	06/09 →	12/12	FRP3050	BREMBO				
3.8 Carrera 4 GTS	300	06/09 →	12/12				FRP3051	BREMBO	
3.8 Carrera 4S	283	06/08 →	12/12	FRP3050	BREMBO				
3.8 Carrera 4S	283	06/08 →	12/12				FRP3051	BREMBO	
3.8 Carrera 4S	261	04/05 →	12/08	FRP3050	BREMBO				
3.8 Carrera 4S	261	04/05 →	12/08				FRP3051	BREMBO	
3.8 Carrera 4S	280	08/05 →	12/08	FRP3050	BREMBO				
3.8 Carrera 4S	280	08/05 →	12/08				FRP3051	BREMBO	
3.8 Carrera GTS	300	06/09 →	12/11	FRP3050	BREMBO				
3.8 Carrera GTS	300	06/09 →	12/11				FRP3051	BREMBO	
3.8 Carrera S	283	06/08 →	12/11	FRP3050	BREMBO				
3.8 Carrera S	283	06/08 →	12/11				FRP3051	BREMBO	
3.8 Carrera S	261	04/05 →	12/08	FRP3050	BREMBO				
3.8 Carrera S	261	04/05 →	12/08				FRP3051	BREMBO	
3.8 Carrera S	280	08/05 →	12/08	FRP3050	BREMBO				
3.8 Carrera S	280	08/05 →	12/08				FRP3051	BREMBO	
3.8 Turbo	368	09/09 →	12/12	FRP3075	BREMBO				
3.8 Turbo	368	09/09 →	12/12				FRP3143	BREMBO	For vehicles without ceramic discs
3.8 Turbo S	390	02/10 →	12/12	FRP3075	BREMBO				
3.8 Turbo S	390	02/10 →	12/12				FRP3143	BREMBO	For vehicles without ceramic discs

For material availability see page 16-18 / Per la disponibilità materiali vedere a pagina 16-18

FERODO RACING
Updated on November 2020

...PORSCHE	kW				NOTE			NOTE
911 Targa (991)								
3.0 Carrera 4 GTS	331	03/17 →				FCP4713	BREMBO	For vehicles without ceramic discs
3.0 Carrera 4S	309	11/15 →	FCP4955	BREMBO	For vehicles without ceramic discs			
3.0 Carrera 4S	309	11/15 →				FCP4713	BREMBO	
3.4 Carrera 4	257	05/14 →	FCP4955	BREMBO				
3.4 Carrera 4	257	05/14 →				FCP4713	BREMBO	
3.8 Carrera 4S	294	05/14 →	FCP4955	BREMBO	For vehicles without ceramic discs			
3.8 Carrera 4S	294	05/14 →				FCP4713	BREMBO	type I450 - For vehicles without ceramic discs
3.8 Carrera 4S / 4 GTS	316	05/14 →	FCP4955	BREMBO	For vehicles without ceramic discs			
3.8 Carrera 4S / 4 GTS	316	05/14 →				FCP4713	BREMBO	type I450 - For vehicles without ceramic discs
911 Targa (996)								
3.6	235	12/01 → 08/05	FRP3051	BREMBO				
3.6	235	12/01 → 08/05				FCP1308	BREMBO	
911 Targa (997)								
3.6 Carrera 4	239	07/06 → 12/08	FRP3051	BREMBO				
3.6 Carrera 4	239	07/06 → 12/08				FCP1308	BREMBO	
3.6 Carrera 4	254	10/08 → 12/12	FCP4805	BREMBO				
3.6 Carrera 4	254	10/08 → 12/12				FRP3143	BREMBO	
3.8 Carrera 4S	283	10/08 → 12/12	FRP3050	BREMBO				
3.8 Carrera 4S	283	10/08 → 12/12				FRP3051	BREMBO	
3.8 Carrera 4S	261	07/06 → 12/08	FRP3050	BREMBO				
3.8 Carrera 4S	261	07/06 → 12/08				FRP3051	BREMBO	
912								
1.6	66	01/65 → 12/69	FCP2	ATE				
1.6	66	01/65 → 12/69				FCP3	ATE	
914								
1.7 VW-Porsche 4	63	01/69 → 12/75	FCP2	ATE				
1.7 VW-Porsche 4	63	01/69 → 12/75				FCP93	ATE	
2.0 VW-Porsche 6	92	01/69 → 12/73	FCP3	ATE				
928								
4.5 16V	177	12/79 → 07/82	FCP256	ATE				
4.7 S 16V	221	01/81 → 08/83	FCP256	ATE				
4.7 S series 2 16V	221	09/83 → 07/86	FCP560	ATE				
4.7 S series 2 16V	221	09/83 → 07/86				FCP541	LUCAS/TRW	
5.0 S series 4,GT 32V	235, 243	09/86 → 05/92	FCP560	ATE				
5.0 S series 4,GT 32V	235, 243	09/86 → 05/92				FCP541	LUCAS/TRW	
5.4 GTS 32V	257	05/92 → 01/95	FCP891	ATE				
5.4 GTS 32V	257	05/92 → 01/95				FCP451	ATE	
944								
2.5 (Turbo)	220, 250	09/85 → 08/88	FCP451	ATE				
2.5 (Turbo)	220, 250	09/85 → 08/88				FCP451	ATE	
2.5 (Turbo)	250	09/88 → 05/92	FCP560	ATE				
2.5 (Turbo)	250	09/88 → 05/92				FCP451	ATE	
2.7 S2	121	01/88 → 08/90	FCP451	ATE				
2.7 S2	121	01/88 → 08/90				FCP451	ATE	
3.0 S2 16V	156	01/89 → 05/92	FCP451	ATE				
3.0 S2 16V	156	01/89 → 05/92				FCP451	ATE	
959								
2.9	330	01/85 → 12/91	FCP560	ATE				
2.9	330	01/85 → 12/91				FCP560	ATE	
968								
3.0 (Turbo)	224	03/93 → 11/95	FCP891	ATE				
3.0 (Turbo)	224	03/93 → 11/95				FCP451	ATE	
3.0 Club Sport 16V	176	01/93 → 10/95	FCP560	ATE				
3.0 Club Sport 16V	176	01/93 → 10/95				FCP451	ATE	
3.0 Not Club Sport 16V	176	01/93 → 10/95	FCP451	ATE				
3.0 Not Club Sport 16V	176	01/93 → 10/95				FCP451	ATE	
993								
Carrera		01/94 → 12/97	FCP560	ATE				
Carrera		01/94 → 12/97				FCP451	ATE	
Carrera RS		01/94 → 12/97	FCP891	ATE				
Carrera RS		01/94 → 12/97				FCP560	ATE	
GT2	316	03/95 →	FRP3042	BREMBO				
Turbo		01/94 → 12/97	FCP891	ATE				
Turbo		01/94 → 12/97				FCP560	ATE	

For material availability see page 16-18 / Per la disponibilità materiali vedere a pagina 16-18

...PORSCHE

	kW				NOTE			NOTE
BOXSTER (981)								
2.7	195	04/12 →	**FCP4805**	BREMBO				
2.7	195	04/12 →				**FCP1308**	BREMBO	
GTS 3.4	243	02/14 →	**FCP4805**	BREMBO				
GTS 3.4	243	02/14 →				**FCP1308**	BREMBO	For vehicles without ceramic brakes
S 3.4	232	04/12 →	**FCP4805**	BREMBO				
S 3.4	232	04/12 →				**FCP1308**	BREMBO	
Boxster (986)								
2.5	150	09/96 → 08/99	**FCP1307**	BREMBO				
2.5	150	09/96 → 08/99				**FCP1308**	BREMBO	
S 3,2	191	07/02 → 12/04	**FRP3051**	BREMBO				
S 3,2	191	07/02 → 12/04				**FCP1308**	BREMBO	
S 3.2	185	08/99 → 07/02	**FRP3051**	BREMBO				
S 3.2	185	08/99 → 07/02				**FCP1308**	BREMBO	
S 3.2	196	01/04 → 12/04	**FRP3051**	BREMBO				
S 3.2	196	01/04 → 12/04				**FCP1308**	BREMBO	
Boxster (987)								
2.7	180	07/06 →	**FCP1307**	BREMBO				
2.7	180	07/06 →				**FCP1308**	BREMBO	
2.9	188	06/09 → 03/12	**FCP1307**	BREMBO				
2.9	188	06/09 → 03/12				**FCP1308**	BREMBO	
S 3.2	206	11/04 → 12/06	**FRP3051**	BREMBO				
S 3.2	206	11/04 → 12/06				**FCP1308**	BREMBO	
S 3.4	217	07/06 → 12/09	**FRP3051**	BREMBO				
S 3.4	217	07/06 → 12/09				**FCP1308**	BREMBO	
S 3.4	223	08/08 → 12/09	**FRP3051**	BREMBO				
S 3.4	223	08/08 → 12/09				**FCP1308**	BREMBO	
S 3.4	228	06/09 → 12/11	**FRP3051**	BREMBO				
S 3.4	228	06/09 → 12/11				**FCP1308**	BREMBO	
BOXSTER Spyder (981)								
3.8	276	07/15 →	**FCP4805**	BREMBO	Not for carbon-ceramic discs			
BOXSTER Spyder (987)								
3.4	235	06/10 → 12/11	**FRP3051**	BREMBO				
3.4	235	06/10 → 12/11				**FCP1308**	BREMBO	
3.4 RS 60	223	09/07 → 12/08	**FRP3051**	BREMBO				
3.4 RS 60	223	09/07 → 12/08				**FCP1308**	BREMBO	
Cayenne								
3.0 D	176	06/10 →	**FCP4064**	BREMBO	PR 1LL/1LU/1LH			
3.0 S Hybrid	245	06/10 →	**FCP4064**	BREMBO	PR 1LL/1LU/1LH			
3.6	220	06/10 →	**FCP4064**	BREMBO	PR 1LL/1LU/1LH			
4.8 S	294	06/10 →	**FCP4064**	BREMBO	PR 1LL/1LU/1LH			
4.8 Turbo	368	06/10 →	**FCP4064**	BREMBO	PR 1LL/1LU/1LH			
CAYENNE (955)								
3.0 TDI	176	02/09 → 09/10	**FCP4467**	BREMBO	NOT FOR CERAMIC DISCS			
3.2	184	10/03 → 09/07	**FCP1625**	BREMBO	17"			
3.2	184	10/03 → 09/07	**FCP4064**	BREMBO	19"			
3.2	184	10/03 → 09/07				**FCP1308**	BREMBO	Rim size 19"
3.6	213	02/07 → 09/10	**FCP1625**	BREMBO	17"			
3.6	213	02/07 → 09/10	**FCP4064**	BREMBO	19"			
3.6	213	02/07 → 09/10				**FCP1308**	BREMBO	Rim size 19"
4.5 Turbo S	368	01/04 →	**FCP4064**	BREMBO	19"			
4.5 Turbo S	368	01/04 →				**FCP1308**	BREMBO	19"
GTS 4.8	298	10/07 → 09/10	**FCP4467**	BREMBO	NOT FOR CERAMIC DISCS			
GTS 4.8	298	10/07 → 09/10				**FCP1308**	BREMBO	Rim size 19"
GTS 4.8	298	10/07 → 09/10				**FCP4713**	BREMBO	type 2EH - For vehicles without ceramic discs
S 4.5	250	09/02 → 09/07	**FCP1625**	BREMBO	17"			
S 4.5	250	09/02 → 09/07	**FCP4064**	BREMBO	19"			
S 4.5	250	09/02 → 09/07	**FCP4467**	BREMBO	NOT FOR CERAMIC DISCS			
S 4.5	250	09/02 → 09/07				**FCP1308**	BREMBO	Rim size 19"
S 4.8	283	02/07 → 09/10	**FCP1625**	BREMBO	17"			
S 4.8	283	02/07 → 09/10	**FCP4064**	BREMBO	19"			
S 4.8	283	02/07 → 09/10				**FCP1308**	BREMBO	Rim size 19"
Turbo 4.5	331	09/02 → 09/07	**FCP1626**	BREMBO	17" / 18"			
Turbo 4.5	331	09/02 → 09/07	**FCP4064**	BREMBO	19"			
Turbo 4.5	331	09/02 → 09/07	**FCP4467**	BREMBO	NOT FOR CERAMIC DISCS			
Turbo 4.5	331	09/02 → 09/07				**FCP1308**	BREMBO	Rim size 19"
Turbo S 4.5	368	01/04 → 09/07	**FCP4467**	BREMBO	NOT FOR CERAMIC DISCS			
Turbo S 4.5	368	01/04 → 09/07				**FCP1308**	BREMBO	Rim size 19"
Turbo S 4.5	383	03/06 → 09/07	**FCP4064**	BREMBO	19"			
Turbo S 4.5	383	03/06 → 09/07	**FCP4467**	BREMBO	NOT FOR CERAMIC DISCS			
Turbo S 4.5	383	03/06 → 09/07				**FCP1308**	BREMBO	Rim size 19"

For material availability see page 16-18 / Per la disponibilità materiali vedere a pagina 16-18



kW

...PORSCHE

...CAYENNE (955)

Turbo S 4.5	383	03/06 → 09/07				FCP4713	BREMBO	type 2EH - For vehicles without ceramic discs
Turbo S 4.8	368	02/07 → 09/10	FCP4064	BREMBO	19"			
Turbo S 4.8	368	02/07 → 09/10	FCP4467	BREMBO	NOT FOR CERAMIC DISCS			
Turbo S 4.8	368	02/07 → 09/10				FCP1308	BREMBO	Rim size 19"
Turbo S 4.8	397	02/07 → 09/10				FCP1308	BREMBO	
Turbo S 4.8	404	08/08 → 09/10				FCP4713	BREMBO	type 2EH - For vehicles without ceramic discs
Turbo S 4.8	404	08/08 → 09/10				FCP1308	BREMBO	

Cayman

GT4 Clubsport		01/16 →	FRP3151	PFC				
GT4 Clubsport		01/16 →				FRP3152	PFC	
GT4 MR		01/16 →	FRP3151	PFC				
GT4 MR		01/16 →				FRP3152	PFC	

CAYMAN (981)

2.7	202	03/13 →	FCP4805	BREMBO				
2.7	202	03/13 →				FCP1308	BREMBO	
3.8 GT4	283	01/15 →	FCP4664	BREMBO				
3.8 GT4	283	01/15 →				FCP4665	BREMBO	
GTS 3.4	250	02/14 →	FCP4805	BREMBO				
GTS 3.4	250	02/14 →				FCP1308	BREMBO	
S 3.4	239	03/13 →	FCP4805	BREMBO				
S 3.4	239	03/13 →				FCP1308	BREMBO	

Cayman (987)

2.7	180	07/06 →	FCP1307	BREMBO				
2.7	180	07/06 →				FCP1308	BREMBO	
2.7	205	09/12 → 12/11	FCP4805	BREMBO				
2.9	195	02/09 → 12/12	FRP3051	BREMBO				
2.9	195	02/09 → 12/12				FCP1308	BREMBO	
R 3.4	243	11/10 → 12/12	FRP3051	BREMBO				
R 3.4	243	11/10 → 12/12				FCP1308	BREMBO	For vehicles without ceramic brakes
S 3.4	217	11/05 → 12/09	FRP3051	BREMBO				
S 3.4	217	11/05 → 12/09				FCP1308	BREMBO	
S 3.4	242	09/12 → 12/11	FCP4805	BREMBO				
S 3.4	235	02/09 → 06/13	FRP3051	BREMBO				
S 3.4	235	02/09 → 06/13				FCP1308	BREMBO	

MACAN (95B)

2.0	185	10/15 →	FCP4064	BREMBO	For PR number : 1ZK			
2.0	185	10/15 →				FCP4050	LUCAS/TRW	For PR numbers : 1KY, 1KE, 1KD
3.0 GTS	265	10/15 →	FCP4064	BREMBO	For PR number : 1ZK			
3.0 GTS	265	10/15 →				FCP4050	LUCAS/TRW	For PR numbers : 1KE, 1KD
3.0 S	250	02/14 →	FCP4064	BREMBO	For PR number : 1ZK			
3.0 S	250	02/14 →				FCP4050	LUCAS/TRW	For PR number : 1KE
3.0 S Diesel	155	02/14 →	FCP4064	BREMBO	For PR number : 1ZK			
3.0 S Diesel	155	02/14 →				FCP4050	LUCAS/TRW	For PR number : 1KE
3.0 S Diesel	184	02/14 →	FCP4064	BREMBO	For PR number : 1ZK			
3.0 S Diesel	184	02/14 →				FCP4050	LUCAS/TRW	For PR number : 1KD, 1KE
3.6 Turbo	324	09/16 →	FCP4064	BREMBO	For PR number : 1LH			
3.6 Turbo	394	02/14 →	FCP4064	BREMBO	For PR number : 1ZK			
3.6 Turbo	394	02/14 →				FCP4050	LUCAS/TRW	For PR number : 1KE

PANAMERA (970)

3.0 4S	235	10/13 →	FCP4064	BREMBO	For vehicles without ceramic discs			
3.0 4S	235	10/13 →				FCP4713	BREMBO	For vehicles without ceramic discs
3.0 4S	309	07/13 → 10/16	FCP4064	BREMBO	For vehicles without ceramic discs			
3.0 4S	309	07/13 → 10/16				FCP4713	BREMBO	For vehicles without ceramic discs,type I450
3.0 D	155	08/11 →	FCP4064	BREMBO	For vehicles without ceramic discs			
3.0 D	155	08/11 →				FCP4713	BREMBO	For vehicles without ceramic discs
3.0 D	184	08/11 →	FCP4064	BREMBO	For vehicles without ceramic discs			
3.0 D	184	08/11 →				FCP4713	BREMBO	For vehicles without ceramic discs
3.0 D	221	01/14 →	FCP4064	BREMBO	For vehicles without ceramic discs			
3.0 D	221	01/14 →				FCP4713	BREMBO	For vehicles without ceramic discs
3.0 S	235	10/13 →	FCP4064	BREMBO	For vehicles without ceramic discs			
3.0 S	235	10/13 →				FCP4713	BREMBO	For vehicles without ceramic discs
3.0 S	309	07/13 → 10/16	FCP4064	BREMBO	For vehicles without ceramic discs			
3.0 S	309	07/13 → 10/16				FCP4713	BREMBO	For vehicles without ceramic discs,type I450
3.0 S E-Hybrid	245	03/11 →	FCP4064	BREMBO	For vehicles without ceramic discs			
3.0 S E-Hybrid	245	03/11 →				FCP4713	BREMBO	For vehicles without ceramic discs
3.0 S E-Hybrid	279	03/11 →	FCP4064	BREMBO	For vehicles without ceramic discs			
3.0 S E-Hybrid	279	03/11 →				FCP4713	BREMBO	For vehicles without ceramic discs
3.0 S E-Hybrid	306	07/13 → 10/16	FCP4064	BREMBO	For vehicles without ceramic discs			
3.0 S E-Hybrid	306	07/13 → 10/16				FCP4713	BREMBO	For vehicles without ceramic discs
3.6	220	05/10 →	FCP1094	ATE	PR: 1ZG,1LR,1ZJ			
3.6	220	05/10 →	FCP1641	ATE	PR: 1LN,1ZC,1ZD			

For material availability see page 16-18 / Per la disponibilità materiali vedere a pagina 16-18

	kW				NOTE			NOTE
...PORSCHE								
...Panamera (970)								
3.6	220	05/10 →	**FCP4064**	BREMBO	without ceramic brakes			
3.6	220	05/10 →	**FCP4064**	BREMBO	For vehicles without ceramic discs			
3.6	220	05/10 →				**FCP1491**	LUCAS/TRW	PR: 1KK,1KT,1KV,2EJ
3.6	220	05/10 →				**FCP4713**	BREMBO	For vehicles without ceramic discs
3.6	228	07/13 →	**FCP4064**	BREMBO	For vehicles without ceramic discs			
3.6	228	07/13 →				**FCP4713**	BREMBO	For vehicles without ceramic discs
3.6 4	220	05/10 →	**FCP4064**	BREMBO	For vehicles without ceramic discs			
3.6 4	220	05/10 →				**FCP4713**	BREMBO	For vehicles without ceramic discs
3.6 4	228	07/13 →	**FCP4064**	BREMBO	For vehicles without ceramic discs			
3.6 4	228	07/13 →				**FCP4713**	BREMBO	For vehicles without ceramic discs
4.8	302	09/09 →	**FCP4064**	BREMBO	For vehicles without ceramic discs			
4.8	302	09/09 →				**FCP4713**	BREMBO	For vehicles without ceramic discs
4.8 4S	294	09/09 →	**FCP4064**	BREMBO	For vehicles without ceramic discs			
4.8 4S	294	09/09 →				**FCP4713**	BREMBO	For vehicles without ceramic discs
4.8 4S	302	09/09 →	**FCP4064**	BREMBO	For vehicles without ceramic discs			
4.8 4S	302	09/09 →				**FCP4713**	BREMBO	For vehicles without ceramic discs
4.8 GTS	316	01/12 →	**FCP4064**	BREMBO	For vehicles without ceramic discs			
4.8 GTS	316	01/12 →				**FCP4713**	BREMBO	For vehicles without ceramic discs
4.8 GTS	320	09/12 →	**FCP4064**	BREMBO	For vehicles without ceramic discs			
4.8 GTS	320	09/12 →				**FCP4713**	BREMBO	For vehicles without ceramic discs
4.8 GTS	324	07/13 →	**FCP4064**	BREMBO	For vehicles without ceramic discs			
4.8 GTS	324	07/13 →				**FCP4713**	BREMBO	For vehicles without ceramic discs
4.8 S	294	09/09 →	**FCP4064**	BREMBO	For vehicles without ceramic discs			
4.8 S	294	09/09 →				**FCP4713**	BREMBO	For vehicles without ceramic discs
4.8 Turbo	368	09/09 →	**FCP4064**	BREMBO	For vehicles without ceramic discs			
4.8 Turbo	368	09/09 →				**FCP4713**	BREMBO	For vehicles without ceramic discs
4.8 Turbo	382	07/13 →	**FCP4064**	BREMBO	For vehicles without ceramic discs			
4.8 Turbo	382	07/13 →				**FCP4713**	BREMBO	For vehicles without ceramic discs
4.8 Turbo	397	08/10 →	**FCP4064**	BREMBO	For vehicles without ceramic discs			
4.8 Turbo	397	08/10 →				**FCP4713**	BREMBO	For vehicles without ceramic discs
4.8 Turbo S	404	05/11 →	**FCP4064**	BREMBO	For vehicles without ceramic discs			
4.8 Turbo S	404	05/11 →				**FCP4713**	BREMBO	For vehicles without ceramic discs
4.8 Turbo S	419	01/14 →	**FCP4064**	BREMBO	For vehicles without ceramic discs			
4.8 Turbo S	419	01/14 →				**FCP4713**	BREMBO	For vehicles without ceramic discs
RELIANT								
Scimitar								
1.3 SS1	49	02/85 → 01/90	**FCP840**	LOCKHEED				
1.4 SS1	53	02/85 → 01/90	**FCP840**	LOCKHEED				
1.4 SST	53	01/90 → 04/92	**FCP840**	LOCKHEED				
1.6 SS1	71	02/85 → 01/90	**FCP840**	LOCKHEED				
RENAULT								
11								
1.1		12/86 → 12/89	**FCP393**	BENDIX				
1.1		12/86 → 12/89	**FCP845**	LUCAS/TRW				
1.1	35	06/83 → 12/89	**FCP393**	BENDIX				
1.1	35	06/83 → 12/89	**FCP845**	LUCAS/TRW				
1.1	35	07/86 → 11/86	**FCP393**	BENDIX				
1.1	35	07/86 → 11/86	**FCP845**	LUCAS/TRW				
1.2	40	10/86 → 12/89	**FCP393**	BENDIX				
1.2	40	10/86 → 12/89	**FCP845**	LUCAS/TRW				
1.4	44, 50	06/83 → 09/86	**FCP393**	BENDIX				
1.4	44, 50	06/83 → 09/86	**FCP845**	LUCAS/TRW				
1.4	43	10/86 → 12/89	**FCP393**	BENDIX				
1.4	43	10/86 → 12/89	**FCP845**	LUCAS/TRW				
1.4	44	10/86 → 12/89	**FCP393**	BENDIX				
1.4	44	10/86 → 12/89	**FCP845**	LUCAS/TRW				
1.4	50	10/86 → 12/89	**FCP393**	BENDIX				
1.4	50	10/86 → 12/89	**FCP845**	LUCAS/TRW				
1.4 (Turbo)	85	01/84 → 09/86	**FCP393**	BENDIX				
1.4 (Turbo)	85	01/84 → 09/86	**FCP845**	LUCAS/TRW				
1.4 (Turbo)	85	01/84 → 09/86				**FCP558**	BENDIX	
1.4 (Turbo)	85	10/86 → 06/89	**FCP393**	BENDIX				
1.4 (Turbo)	85	10/86 → 06/89	**FCP845**	LUCAS/TRW				
1.4 (Turbo)	85	10/86 → 06/89				**FCP558**	BENDIX	
1.6 D	40	06/83 → 12/89	**FCP393**	BENDIX				
1.6 D	40	06/83 → 12/89	**FCP845**	LUCAS/TRW				
1.6 D	40	10/86 → 12/89	**FCP393**	BENDIX				
1.6 D	40	10/86 → 12/89	**FCP845**	LUCAS/TRW				
1.7	54, 55	10/86 → 12/89	**FCP393**	BENDIX				
1.7	54, 55	10/86 → 12/89	**FCP845**	LUCAS/TRW				

For material availability see page 16-18 / Per la disponibilità materiali vedere a pagina 16-18

...RENAULT

	kW				NOTE			NOTE
...11								
1.7	60, 66	06/83 → 09/86	**FCP393**	BENDIX				
1.7	60, 66	06/83 → 09/86	**FCP845**	LUCAS/TRW				
12								
1.3 (1170)	37	07/75 → 04/80	**FCP72**	BENDIX				
1.3 (1170)	40	10/69 → 08/80	**FCP72**	BENDIX				
1.3 TS (1177, 1337)	44	08/72 → 08/80	**FCP72**	BENDIX				
1.4	49	08/76 → 05/79	**FCP72**	BENDIX				
1.6 Gordini		06/70 → 12/74	**FCP72**	BENDIX				
1.6 Gordini		06/70 → 12/74				**FCP72**	BENDIX	
14								
1.2	41	04/76 → 12/84	**FCP72**	BENDIX				
1.2	42	04/76 → 12/84	**FCP72**	BENDIX				
1.2	51	04/76 → 12/84	**FCP72**	BENDIX				
1.4	44, 52	04/76 → 12/84	**FCP72**	BENDIX				
15								
1.3	43	07/71 → 12/79	**FCP72**	BENDIX				
1.6 TS	63	07/71 → 12/75	**FCP72**	BENDIX				
1.6 TS	63	07/71 → 12/75				**FCP72**	BENDIX	
16 (115_)								
1.5		01/68 → 12/80	**FCP72**	BENDIX				
1.6 TL (1152, 1153, 1157)	48	01/71 → 08/80	**FCP72**	BENDIX				
1.6 TS (1151, 1154)	61	09/68 → 08/80	**FCP72**	BENDIX				
1.6 TX (1156)	68	06/74 → 08/80	**FCP72**	BENDIX				
17								
1.6	66	03/72 → 10/80	**FCP72**	BENDIX				
1.6	68	06/74 → 08/79	**FCP72**	BENDIX				
1.6 (R177)		01/71 → 12/80	**FCP72**	BENDIX				
1.6 Gordini		10/74 → 12/79	**FCP72**	BENDIX				
1.6 Gordini		10/74 → 12/79				**FCP72**	BENDIX	
1.7 (R177)		01/71 → 12/80	**FCP72**	BENDIX				
18								
1.4 i R1340/R1350	46	01/85 → 12/86	**FCP393**	BENDIX				
1.4 i R1340/R1350	46	01/85 → 12/86	**FCP845**	LUCAS/TRW				
1.4 R1340/R1350	46	04/78 → 06/82	**FCP72**	BENDIX				
1.4 R1340/R1350	46	07/82 → 12/86	**FCP845**	LUCAS/TRW				
1.6	70, 81	04/78 → 06/82	**FCP393**	BENDIX				
1.6	70, 81	04/78 → 06/82	**FCP845**	LUCAS/TRW				
1.6	92	07/82 → 12/86	**FCP393**	BENDIX				
1.6	92	07/82 → 12/86	**FCP845**	LUCAS/TRW				
1.6 (Turbo)	80, 92	01/82 → 12/86	**FCP393**	BENDIX				
1.6 (Turbo)	80, 92	01/82 → 12/86	**FCP845**	LUCAS/TRW				
1.6 (Turbo)	80, 92	01/82 → 12/86				**FCP72**	BENDIX	
1.6 i R1341/R1351	52, 58	01/85 → 12/86	**FCP393**	BENDIX				
1.6 i R1341/R1351	52, 58	01/85 → 12/86	**FCP845**	LUCAS/TRW				
1.6 i TS	52, 58	01/85 → 07/86	**FCP393**	BENDIX				
1.6 i TS	52, 58	01/85 → 07/86	**FCP845**	LUCAS/TRW				
1.6 R1341/R1351	52, 58	07/82 → 12/86	**FCP393**	BENDIX				
1.6 R1341/R1351	52, 58	07/82 → 12/86	**FCP845**	LUCAS/TRW				
1.6 R1341/R1351	58	04/78 → 06/82	**FCP72**	BENDIX				
1.6 R1342	70	07/82 → 12/86	**FCP393**	BENDIX				
1.6 R1342	70	07/82 → 12/86	**FCP845**	LUCAS/TRW				
1.6 SW Estate Turbo (R1355)		01/82 → 12/86	**FCP393**	BENDIX				
1.6 SW Estate Turbo (R1355)		01/82 → 12/86	**FCP845**	LUCAS/TRW				
1.6 SW Estate Turbo (R1355)		01/82 → 12/86				**FCP72**	BENDIX	
1.6 TS	52, 58	05/82 → 07/86	**FCP393**	BENDIX				
1.6 TS	52, 58	05/82 → 07/86	**FCP845**	LUCAS/TRW				
1.6 TS	70	05/82 → 07/86	**FCP393**	BENDIX				
1.6 TS	70	05/82 → 07/86	**FCP845**	LUCAS/TRW				
2.0 i R1343/R1353	77	01/83 → 12/86	**FCP393**	BENDIX				
2.0 i R1343/R1353	77	01/83 → 12/86	**FCP845**	LUCAS/TRW				
2.0 R1343/R1353	77	07/81 → 12/86	**FCP393**	BENDIX				
2.0 R1343/R1353	77	07/81 → 12/86	**FCP845**	LUCAS/TRW				
2.1 D R1344/R1354	48	01/85 → 12/86	**FCP393**	BENDIX				
2.1 D R1344/R1354	48	01/85 → 12/86	**FCP845**	LUCAS/TRW				
2.1 D R1344/R1354	48	07/80 → 12/86	**FCP393**	BENDIX				
2.1 D R1344/R1354	48	07/80 → 12/86	**FCP845**	LUCAS/TRW				
2.1 TD R1346/R1356	65	01/83 → 12/86	**FCP393**	BENDIX				
2.1 TD R1346/R1356	65	01/83 → 12/86	**FCP845**	LUCAS/TRW				

For material availability see page 16-18 / Per la disponibilità materiali vedere a pagina 16-18

...RENAULT

	kW				NOTE			NOTE
19								
1.2 i , Chamade		05/92 → 12/96	**FCP393**	BENDIX				
1.2 i , Chamade		05/92 → 12/96	**FCP845**	LUCAS/TRW				
1.2 i , Chamade	40	09/88 → 04/91	**FCP845**	LUCAS/TRW				
1.2 i , Chamade	40	09/88 → 04/92	**FCP393**	BENDIX				
1.2 i , Chamade	40	05/91 → 04/92	**FCP845**	LUCAS/TRW				
1.7 Chamade	54, 66	09/88 → 04/92	**FCP393**	BENDIX				
1.7 Chamade	54, 66	09/88 → 04/92	**FCP845**	LUCAS/TRW				
1.7 Chamade	54, 66	09/88 → 04/92				**FCP558**	BENDIX	ABS
1.7 Chamade D53C TXE/RT	69, 70	01/91 → 04/92	**FCP393**	BENDIX				
1.7 Chamade D53C TXE/RT	69, 70	01/91 → 04/92	**FCP845**	LUCAS/TRW				
1.7 Chamade D53C TXE/RT	69, 70	01/91 → 04/92				**FCP558**	BENDIX	
1.7 i , Chamade	54, 66	05/91 → 04/92	**FCP393**	BENDIX				
1.7 i , Chamade	54, 66	05/91 → 04/92	**FCP845**	LUCAS/TRW				
1.7 i ,Chamade D53C TXE/RT	69, 70	05/92 → 12/95	**FCP393**	BENDIX				
1.7 i ,Chamade D53C TXE/RT	69, 70	05/92 → 12/95	**FCP845**	LUCAS/TRW				
1.7 i ,Chamade D53C TXE/RT	69, 70	05/92 → 12/95				**FCP558**	BENDIX	
1.8 Chamade	81, 104	09/88 → 12/95	**FCP393**	BENDIX				
1.8 Chamade	81, 104	09/88 → 12/95	**FCP845**	LUCAS/TRW				
1.8 Chamade	81, 104	09/88 → 12/95				**FCP558**	BENDIX	ABS
1.8 Chamade B/C/L53Y	81	09/88 → 11/95	**FCP393**	BENDIX				
1.8 Chamade B/C/L53Y	81	09/88 → 11/95	**FCP845**	LUCAS/TRW				
1.8 Chamade B/C/L53Y	81	09/88 → 11/95				**FCP558**	BENDIX	ABS
1.8 Chamade RT (D53Y)	81	09/88 → 11/95	**FCP393**	BENDIX				
1.8 Chamade RT (D53Y)	81	09/88 → 11/95	**FCP845**	LUCAS/TRW				
1.8 Chamade RT (D53Y)	81	09/88 → 11/95				**FCP558**	BENDIX	ABS
1.8 i , Chamade B/C/L53Y	81	05/91 → 04/92	**FCP393**	BENDIX				
1.8 i , Chamade B/C/L53Y	81	05/91 → 04/92	**FCP845**	LUCAS/TRW				
1.8 i , Chamade B/C/L53Y	81	05/92 → 11/95	**FCP393**	BENDIX				
1.8 i , Chamade B/C/L53Y	81	05/92 → 11/95	**FCP845**	LUCAS/TRW				
1.8 i , D53Y Chamade RT	81	05/91 → 04/92	**FCP393**	BENDIX				
1.8 i , D53Y Chamade RT	81	05/91 → 04/92	**FCP845**	LUCAS/TRW				
1.8 i ,Chamade 16V	100, 104	01/90 → 12/96	**FCP393**	BENDIX				
1.8 i ,Chamade 16V	100, 104	01/90 → 12/96				**FCP558**	BENDIX	
1.9 D , Chamade	47	05/91 → 04/92	**FCP393**	BENDIX				
1.9 D , Chamade	47	05/91 → 04/92	**FCP845**	LUCAS/TRW				
1.9 D , Chamade	47	05/92 → 12/96	**FCP845**	LUCAS/TRW				
1.9 D, Chamade	47	09/88 → 12/96	**FCP393**	BENDIX				
1.9 D, Chamade	47	09/88 → 12/96	**FCP845**	LUCAS/TRW				
1.9 D, Chamade	47	09/88 → 12/96				**FCP558**	BENDIX	ABS
1.9 TD , Chamade	68	01/90 → 12/96	**FCP845**	LUCAS/TRW				
1.9 TD , Chamade	68	05/91 → 04/92	**FCP393**	BENDIX				
1.9 TD , Chamade	68	05/91 → 04/92	**FCP845**	LUCAS/TRW				
1.9 TD , Chamade	68	05/92 → 12/96	**FCP393**	BENDIX				
1.9 TD , Chamade	68	05/92 → 12/96	**FCP845**	LUCAS/TRW				
19 I Chamade (L53_)								
1.4	55	09/90 → 04/92	**FCP393**	BENDIX				
1.4	55	09/90 → 04/92	**FCP845**	LUCAS/TRW				
1.4	55	09/90 → 04/92				**FCP558**	BENDIX	ABS
1.4	57	07/88 → 08/90	**FCP393**	BENDIX				
1.4	57	07/88 → 08/90	**FCP845**	LUCAS/TRW				
1.4	57	07/88 → 08/90				**FCP558**	BENDIX	ABS
19 II Chamade (L53_)								
1.4	44	09/90 → 04/92	**FCP393**	BENDIX				
1.4	44	09/90 → 04/92	**FCP845**	LUCAS/TRW				
1.4	44	09/90 → 04/92				**FCP558**	BENDIX	ABS
20								
1.6	66	11/75 → 06/80	**FCP72**	BENDIX				
1.6 (R1271)	66	07/80 → 12/84	**FCP393**	BENDIX				
1.6 (R1271)	66	07/80 → 12/84	**FCP845**	LUCAS/TRW				
1.6 i R1271		01/82 → 12/84	**FCP393**	BENDIX				
1.6 i R1271		01/82 → 12/84	**FCP845**	LUCAS/TRW				
2.0	77, 80	07/80 → 01/85	**FCP393**	BENDIX				
2.0	77, 80	07/80 → 01/85	**FCP845**	LUCAS/TRW				
2.1 D	48	12/79 → 01/85	**FCP393**	BENDIX				
2.1 D	48	12/79 → 01/85	**FCP845**	LUCAS/TRW				
2.1 TD	63	12/79 → 01/85	**FCP393**	BENDIX				
2.1 TD	63	12/79 → 01/85	**FCP845**	LUCAS/TRW				
2.2	85	08/81 → 01/85	**FCP393**	BENDIX				

For material availability see page 16-18 / Per la disponibilità materiali vedere a pagina 16-18

FERODO RACING
Updated on November 2020

...RENAULT

	kW				NOTE			NOTE
21								
1.4	50	02/86 → 12/94	**FCP393**	BENDIX				
1.4	50	02/86 → 12/94	**FCP845**	LUCAS/TRW				
1.4 i	50	03/91 → 12/94	**FCP393**	BENDIX				
1.4 i	50	03/91 → 12/94	**FCP845**	LUCAS/TRW				
1.7 i TL/GTL		03/91 → 12/94	**FCP393**	BENDIX				
1.7 i TL/GTL		03/91 → 12/94	**FCP845**	LUCAS/TRW				
1.7 i TS/GTS/RS/TSE		03/91 → 12/94	**FCP393**	BENDIX				
1.7 i TS/GTS/RS/TSE		03/91 → 12/94	**FCP845**	LUCAS/TRW				
1.7 Nevada, Savana TL/GTL		02/87 → 12/94	**FCP393**	BENDIX				
1.7 Nevada, Savana TL/GTL		02/87 → 12/94	**FCP845**	LUCAS/TRW				
1.7 Nevada, Savana TS/GTS/RS/TSE		02/87 → 12/94	**FCP393**	BENDIX				
1.7 Nevada, Savana TS/GTS/RS/TSE		02/87 → 12/94	**FCP845**	LUCAS/TRW				
1.7 TL/GTL		02/86 → 12/94	**FCP393**	BENDIX				
1.7 TL/GTL		02/86 → 12/94	**FCP845**	LUCAS/TRW				
1.7 TL/GTL		03/87 → 02/91	**FCP393**	BENDIX				
1.7 TL/GTL		03/87 → 02/91	**FCP845**	LUCAS/TRW				
1.7 TS/GTS/RS/TSE		02/86 → 12/94	**FCP393**	BENDIX				
1.7 TS/GTS/RS/TSE		02/86 → 12/94	**FCP845**	LUCAS/TRW				
1.7 TS/GTS/RS/TSE		03/87 → 02/91	**FCP393**	BENDIX				
1.7 TS/GTS/RS/TSE		03/87 → 02/91	**FCP845**	LUCAS/TRW				
1.9 D	48	05/89 → 12/94	**FCP393**	BENDIX				
1.9 D	48	05/89 → 12/94	**FCP845**	LUCAS/TRW				
1.9 D Nevada,Savana		05/89 → 12/94	**FCP393**	BENDIX				
1.9 D Nevada,Savana		05/89 → 12/94	**FCP845**	LUCAS/TRW				
2.0 Nevada, Savana	85, 99	07/86 → 12/94				**FCP72**	BENDIX	ABS
2.0 Nevada, Savana	85, 99	07/86 → 12/94				**FCP878**	BREMBO	ABS
2.0 Turbo L485		06/87 → 12/93				**FCP878**	BREMBO	
2.0 TXI	99	02/86 → 12/94				**FCP72**	BENDIX	ABS
2.0 TXI	99	02/86 → 12/94				**FCP878**	BREMBO	ABS
2.1 D	51	02/86 → 12/94	**FCP393**	BENDIX				
2.1 D	51	02/86 → 12/94	**FCP845**	LUCAS/TRW				
2.1 D	51	02/86 → 12/94				**FCP72**	BENDIX	ABS
2.1 D	51	02/86 → 12/94				**FCP878**	BREMBO	ABS
2.1 D	53	02/86 → 12/94	**FCP393**	BENDIX				
2.1 D	53	02/86 → 12/94	**FCP845**	LUCAS/TRW				
2.1 D	53	02/86 → 12/94				**FCP72**	BENDIX	ABS
2.1 D	53	02/86 → 12/94				**FCP878**	BREMBO	ABS
2.1 D	65	02/86 → 12/94	**FCP393**	BENDIX				
2.1 D	65	02/86 → 12/94	**FCP845**	LUCAS/TRW				
2.1 D	65	02/86 → 12/94				**FCP72**	BENDIX	ABS
2.1 D	65	02/86 → 12/94				**FCP878**	BREMBO	ABS
2.1 TD	65	02/86 → 12/94	**FCP393**	BENDIX				
2.1 TD	65	02/86 → 12/94	**FCP845**	LUCAS/TRW				
2.1 TD	65	02/86 → 12/94				**FCP72**	BENDIX	ABS
2.1 TD	65	02/86 → 12/94				**FCP878**	BREMBO	ABS
2.1 TD	65	03/87 → 12/94	**FCP393**	BENDIX				
2.1 TD	65	03/87 → 12/94	**FCP845**	LUCAS/TRW				
2.2	75	07/86 → 12/94				**FCP72**	BENDIX	ABS
2.2	75	07/86 → 12/94				**FCP878**	BREMBO	ABS
2.2	79	07/86 → 12/94				**FCP72**	BENDIX	ABS
2.2	79	07/86 → 12/94				**FCP878**	BREMBO	ABS
2.2	81	07/86 → 12/94				**FCP72**	BENDIX	ABS
2.2	81	07/86 → 12/94				**FCP878**	BREMBO	ABS
2.2 Nevada, Savana	79	06/88 → 12/94				**FCP72**	BENDIX	ABS
2.2 Nevada, Savana	79	06/88 → 12/94				**FCP878**	BREMBO	ABS
21 Estate (K48_)								
2.1 D (K/S486)	48	10/86 → 09/90	**FCP393**	BENDIX				
2.1 D (K/S486)	48	10/86 → 09/90	**FCP845**	LUCAS/TRW				
2.1 D (K/S486)	48	10/86 → 09/90				**FCP72**	BENDIX	ABS
2.1 D (K/S486)	48	10/86 → 09/90				**FCP878**	BREMBO	ABS
2.1 D (K/S48V, K/S48O)	53	08/89 → 12/92	**FCP393**	BENDIX				
2.1 D (K/S48V, K/S48O)	53	08/89 → 12/92	**FCP845**	LUCAS/TRW				
2.1 D (K/S48V, K/S48O)	53	08/89 → 12/92				**FCP72**	BENDIX	ABS
2.1 D (K/S48V, K/S48O)	53	08/89 → 12/92				**FCP878**	BREMBO	ABS
2.1 D (K480)	51	02/92 → 09/95	**FCP393**	BENDIX				
2.1 D (K480)	51	02/92 → 09/95	**FCP845**	LUCAS/TRW				
2.1 D (K480)	51	02/92 → 09/95				**FCP72**	BENDIX	ABS
2.1 D (K480)	51	02/92 → 09/95				**FCP878**	BREMBO	ABS
2.1 D 4x4 (K486)	48	10/88 → 05/92	**FCP393**	BENDIX				
2.1 D 4x4 (K486)	48	10/88 → 05/92	**FCP845**	LUCAS/TRW				
2.1 D 4x4 (K486)	48	10/88 → 05/92				**FCP72**	BENDIX	ABS
2.1 D 4x4 (K486)	48	10/88 → 05/92				**FCP878**	BREMBO	ABS
2.1 Turbo-D (K48A, K48W, K487, K488)	65	10/86 → 11/93	**FCP393**	BENDIX				
2.1 Turbo-D (K48A, K48W, K487, K488)	65	10/86 → 11/93	**FCP845**	LUCAS/TRW				
2.1 Turbo-D (K48A, K48W, K487, K488)	65	10/86 → 11/93				**FCP72**	BENDIX	ABS
2.1 Turbo-D (K48A, K48W, K487, K488)	65	10/86 → 11/93				**FCP878**	BREMBO	ABS

For material availability see page 16-18 / Per la disponibilità materiali vedere a pagina 16-18

...RENAULT

	kW				NOTE			NOTE
25								
2.0 i TI/TXI (B294)	47, 51	01/90 → 12/92	**FCP845**	LUCAS/TRW				
2.0 i TI/TXI (B294)	47, 51	01/90 → 12/92				**FCP72**	BENDIX	ABS
2.1 D	47, 51	02/84 → 12/92	**FCP406**	LUCAS/TRW	ABS			
2.1 D	47, 51	02/84 → 12/92	**FCP845**	LUCAS/TRW				
2.1 D	47, 51	02/84 → 12/92				**FCP72**	BENDIX	ABS
2.1 D	47, 51	06/88 → 12/92	**FCP845**	LUCAS/TRW				
2.1 TD	63	02/84 → 12/92	**FCP406**	LUCAS/TRW	ABS			
2.1 TD	63	02/84 → 12/92	**FCP845**	LUCAS/TRW				
2.1 TD	63	02/84 → 12/92				**FCP72**	BENDIX	ABS
2.1 TD	63	06/88 → 12/92	**FCP406**	LUCAS/TRW				
2.1 TD	63	06/88 → 12/92	**FCP845**	LUCAS/TRW				
2.2	79	02/84 → 12/92	**FCP406**	LUCAS/TRW	ABS			
2.2	79	02/84 → 12/92	**FCP845**	LUCAS/TRW				
2.2	79	02/84 → 12/92				**FCP72**	BENDIX	ABS
2.2	79	06/88 → 12/92	**FCP406**	LUCAS/TRW				
2.2	79	06/88 → 12/92	**FCP845**	LUCAS/TRW				
2.5 V6 (Turbo)	133	10/84 → 06/87	**FCP406**	LUCAS/TRW				
2.5 V6 (Turbo)	133	10/84 → 06/87				**FCP72**	BENDIX	
2.5 V6 (Turbo)	133	07/87 → 05/90	**FCP845**	LUCAS/TRW				
2.5 V6 (Turbo)	133	07/87 → 05/90				**FCP72**	BENDIX	
2.5 V6 (Turbo)	134, 151	03/85 → 12/92	**FCP406**	LUCAS/TRW				
2.5 V6 (Turbo)	134, 151	03/85 → 12/92				**FCP72**	BENDIX	
2.7 V6i (B293/298-B29F)	104	10/85 → 12/92	**FCP406**	LUCAS/TRW				
2.7 V6i (B293/298-B29F)	104	10/85 → 12/92				**FCP72**	BENDIX	
25 (B29_)								
2.0 (B297)	74	04/84 → 12/92	**FCP406**	LUCAS/TRW	ABS			
2.0 (B297)	74	04/84 → 12/92	**FCP845**	LUCAS/TRW				
2.0 (B297)	74	04/84 → 12/92				**FCP72**	BENDIX	ABS
2.0 12V	103	06/88 → 12/93	**FCP406**	LUCAS/TRW	ABS			
2.0 12V	103	06/88 → 12/93	**FCP845**	LUCAS/TRW				
2.0 12V	103	06/88 → 12/93				**FCP72**	BENDIX	ABS
2.8 V6 (B293)	115	06/87 → 02/90	**FCP406**	LUCAS/TRW				
2.8 V6 (B293)	115	06/87 → 02/90				**FCP72**	BENDIX	
2.8 V6 Injection (B29A)	100	06/86 → 02/88	**FCP406**	LUCAS/TRW				
2.8 V6 Injection (B29A)	100	06/86 → 02/88				**FCP72**	BENDIX	
2.8 V6 Injection (B29F)	110	06/87 → 12/92	**FCP406**	LUCAS/TRW				
2.8 V6 Injection (B29F)	110	06/87 → 12/92				**FCP72**	BENDIX	
2.9 V6	100	01/84 → 12/92	**FCP406**	LUCAS/TRW				
2.9 V6	100	01/84 → 12/92				**FCP72**	BENDIX	
2.9 V6	104	01/84 → 12/92	**FCP406**	LUCAS/TRW				
2.9 V6	104	01/84 → 12/92				**FCP72**	BENDIX	
2.9 V6	110	01/84 → 12/92	**FCP406**	LUCAS/TRW				
2.9 V6	110	01/84 → 12/92				**FCP72**	BENDIX	
30								
2.1 TD	63	09/82 → 12/84	**FCP845**	LUCAS/TRW				
4								
0.9		01/82 → 12/92	**FCP72**	BENDIX				
1.0	30	07/86 → 12/92	**FCP72**	BENDIX				
1.1	25, 33	07/86 → 12/92	**FCP72**	BENDIX				
5								
0.8 L, TL, TS, GTL	21	01/71 → 02/85	**FCP72**	BENDIX	alt Disc			
1.0	31	10/84 →	**FCP881**	BENDIX				
1.0 L, TL, TS, GTL	31	01/71 → 09/84	**FCP72**	BENDIX				
1.1	33	04/79 → 12/81	**FCP72**	BENDIX				
1.1	34	07/82 → 09/84	**FCP72**	BENDIX				
1.1	34	07/82 → 01/90	**FCP393**	BENDIX				
1.1	34	10/84 → 01/90	**FCP845**	LUCAS/TRW				
1.1	34	10/84 → 01/90	**FCP881**	BENDIX				
1.3		01/72 → 12/74	**FCP72**	BENDIX				
1.3	43	01/75 → 08/84	**FCP72**	BENDIX				
1.4	43	10/84 → 01/90	**FCP393**	BENDIX				
1.4	43	10/84 → 01/90	**FCP845**	LUCAS/TRW				
1.4	43	10/84 → 01/90	**FCP881**	BENDIX				
1.4	44	10/84 → 01/90	**FCP393**	BENDIX				
1.4	44	10/84 → 01/90	**FCP845**	LUCAS/TRW				
1.4	44	10/84 → 01/90	**FCP881**	BENDIX				
1.4	46	07/82 → 09/84	**FCP72**	BENDIX				
1.4	49	10/84 → 01/90	**FCP393**	BENDIX				
1.4	49	10/84 → 01/90	**FCP845**	LUCAS/TRW				
1.4	49	10/84 → 01/90	**FCP881**	BENDIX				
1.4	52	10/84 → 01/90	**FCP393**	BENDIX				
1.4	52	10/84 → 01/90	**FCP845**	LUCAS/TRW				
1.4	52	10/84 → 01/90	**FCP881**	BENDIX				

For material availability see page 16-18 / Per la disponibilità materiali vedere a pagina 16-18

FERODO RACING
Updated on November 2020

...RENAULT

	kW				NOTE			NOTE
...5								
1.4	68	01/75 → 12/81	**FCP72**	BENDIX				
1.4	85	10/84 → 01/90	**FCP393**	BENDIX				
1.4	85	10/84 → 01/90	**FCP845**	LUCAS/TRW				
1.4	85	10/84 → 01/90	**FCP881**	BENDIX				
1.4 Gordini (Turbo)	81	06/80 → 12/85	**FCP72**	BENDIX				
5 Super								
1.0	31	02/85 → 07/93	**FCP393**	BENDIX				
1.0	31	02/85 → 07/93	**FCP845**	LUCAS/TRW				
1.0	31	02/85 → 07/93	**FCP881**	BENDIX				
1.1	34	02/85 → 06/89	**FCP393**	BENDIX				
1.1	34	02/85 → 06/89	**FCP845**	LUCAS/TRW				
1.1	34	02/85 → 06/89	**FCP881**	BENDIX				
1.2	40	07/86 → 12/90	**FCP393**	BENDIX				
1.2	40	07/86 → 12/90	**FCP845**	LUCAS/TRW				
1.2	40	07/86 → 12/90	**FCP881**	BENDIX				
1.6 D	40	02/85 → 12/96	**FCP393**	BENDIX				
1.6 D	40	02/85 → 12/96	**FCP845**	LUCAS/TRW				
1.6 D	40	02/85 → 12/96	**FCP881**	BENDIX				
1.6 GT (Turbo)		02/86 → 10/91	**FCP845**	LUCAS/TRW				
1.6 GT (Turbo)		02/86 → 10/91				**FCP558**	BENDIX	
1.7	55	07/86 → 01/92	**FCP393**	BENDIX				
1.7	55	07/86 → 01/92	**FCP845**	LUCAS/TRW				
1.7	55	07/86 → 01/92	**FCP881**	BENDIX				
1.7	55	07/86 → 01/92				**FCP558**	BENDIX	
1.7	66	07/86 → 01/92	**FCP393**	BENDIX				
1.7	66	07/86 → 01/92	**FCP845**	LUCAS/TRW				
1.7	66	07/86 → 01/92	**FCP881**	BENDIX				
1.7	66	07/86 → 01/92				**FCP558**	BENDIX	
1.7	70	07/86 → 01/92	**FCP393**	BENDIX				
1.7	70	07/86 → 01/92	**FCP845**	LUCAS/TRW				
1.7	70	07/86 → 01/92	**FCP881**	BENDIX				
1.7	70	07/86 → 01/92				**FCP558**	BENDIX	
6								
0.8	26	01/70 →	**FCP72**	BENDIX				
1.1	34	01/70 →	**FCP72**	BENDIX				
9								
1.1	35	01/82 → 09/86	**FCP393**	BENDIX				
1.1	35	01/82 → 09/86	**FCP845**	LUCAS/TRW				
1.2	40	10/86 → 12/89	**FCP393**	BENDIX				
1.2	40	10/86 → 12/89	**FCP845**	LUCAS/TRW				
1.4	44, 50	01/82 → 09/86	**FCP393**	BENDIX				
1.4	44, 50	01/82 → 09/86	**FCP845**	LUCAS/TRW				
1.4	43	10/86 → 12/89	**FCP393**	BENDIX				
1.4	43	10/86 → 12/89	**FCP845**	LUCAS/TRW				
1.4	44	10/86 → 12/89	**FCP393**	BENDIX				
1.4	44	10/86 → 12/89	**FCP845**	LUCAS/TRW				
1.4	50	10/86 → 12/89	**FCP393**	BENDIX				
1.4	50	10/86 → 12/89	**FCP845**	LUCAS/TRW				
1.4 (Turbo)	85	02/86 → 12/88	**FCP393**	BENDIX				
1.4 (Turbo)	85	02/86 → 12/88	**FCP845**	LUCAS/TRW				
1.4 (Turbo)	85	02/86 → 12/88				**FCP558**	BENDIX	
1.6 D	40	01/82 → 12/89	**FCP393**	BENDIX				
1.6 D	40	01/82 → 12/89	**FCP845**	LUCAS/TRW				
1.7	60, 66	01/82 → 09/86	**FCP393**	BENDIX				
1.7	60, 66	01/82 → 09/86	**FCP845**	LUCAS/TRW				
1.7	54	10/86 → 12/89	**FCP393**	BENDIX				
1.7	54	10/86 → 12/89	**FCP845**	LUCAS/TRW				
1.7	66	10/86 → 12/89	**FCP393**	BENDIX				
1.7	66	10/86 → 12/89	**FCP845**	LUCAS/TRW				
1.7	70	10/86 → 12/89	**FCP393**	BENDIX				
1.7	70	10/86 → 12/89	**FCP845**	LUCAS/TRW				
Avantime								
2.0i 16V	120	09/01 →				**FCP1491**	LUCAS/TRW	
3.0i V6	152	09/01 →				**FCP1491**	LUCAS/TRW	
Clio								
1.0		06/90 → 05/95	**FCP881**	BENDIX				
1.1	35	06/90 → 05/95	**FCP845**	LUCAS/TRW				
1.1	35	06/90 → 05/95	**FCP881**	BENDIX				
1.1 i	35	04/91 → 05/95	**FCP845**	LUCAS/TRW				
1.2	40	09/90 → 02/98	**FCP393**	BENDIX				
1.2	40	09/90 → 02/98	**FCP845**	LUCAS/TRW				

For material availability see page 16-18 / Per la disponibilità materiali vedere a pagina 16-18

...RENAULT	kW				NOTE			NOTE
...Clio								
1.2 i	40	04/91 → 03/96	**FCP845**	LUCAS/TRW				
1.2 i	40	04/91 → 02/98	**FCP393**	BENDIX				
1.2 i	40	04/96 → 12/96	**FCP845**	LUCAS/TRW				
1.4	55	06/90 → 02/98	**FCP393**	BENDIX				
1.4	55	06/90 → 02/98	**FCP845**	LUCAS/TRW				
1.4 i	55	04/91 → 03/96	**FCP393**	BENDIX				
1.4 i	55	04/91 → 02/98	**FCP845**	LUCAS/TRW				
1.4 i	55	04/96 → 12/96	**FCP393**	BENDIX				
1.7	66	06/90 → 12/96	**FCP845**	LUCAS/TRW				
1.7	66	06/90 → 12/96				**FCP558**	BENDIX	ABS
1.7 i	66	04/91 → 12/96	**FCP845**	LUCAS/TRW				
1.8 16V	99	01/91 → 04/96	**FCP845**	LUCAS/TRW				
1.8 16V	99	01/91 → 04/96				**FCP558**	BENDIX	
1.9 D	47	06/90 → 02/98	**FCP393**	BENDIX				
1.9 D	47	06/90 → 02/98	**FCP845**	LUCAS/TRW				
1.9 D	47	02/94 → 04/96	**FCP393**	BENDIX				
1.9 D	47	02/94 → 04/96	**FCP845**	LUCAS/TRW				
1.9 D	47	05/96 → 02/98	**FCP393**	BENDIX				
1.9 D	47	05/96 → 02/98	**FCP845**	LUCAS/TRW				
1.9 D Societe	47	02/94 → 02/98	**FCP393**	BENDIX				
1.9 D Societe	47	06/90 → 02/98	**FCP393**	BENDIX				
2.0 Williams 16V	108	11/93 → 04/96	**FCP845**	LUCAS/TRW				
2.0 Williams 16V	108	11/93 → 04/96				**FCP558**	BENDIX	
CLIO I (B/C57_, 5/357_)								
1.8	66	08/90 → 04/96	**FCP393**	BENDIX				
1.8	66	08/90 → 04/96	**FCP845**	LUCAS/TRW				
1.8	66	08/90 → 04/96				**FCP558**	BENDIX	ABS
1.8 (B/C578)	66	08/94 → 09/98	**FCP393**	BENDIX				
1.8 (B/C578)	66	08/94 → 09/98	**FCP845**	LUCAS/TRW				
1.8 (B/C578)	66	08/94 → 09/98				**FCP558**	BENDIX	ABS
1.8 (B/C57C, B/C57U)	65	01/91 → 09/98	**FCP393**	BENDIX				
1.8 (B/C57C, B/C57U)	65	01/91 → 09/98	**FCP845**	LUCAS/TRW				
1.8 (B/C57C, B/C57U)	65	01/91 → 09/98				**FCP558**	BENDIX	ABS
1.8 Rsi (B/C579)	80	01/93 → 08/95	**FCP393**	BENDIX				
1.8 Rsi (B/C579)	80	01/93 → 08/95	**FCP845**	LUCAS/TRW				
1.8 Rsi (B/C579)	80	01/93 → 08/95				**FCP558**	BENDIX	ABS
1.8 Rsi (B/C57H)	79	08/95 → 09/98	**FCP393**	BENDIX				
1.8 Rsi (B/C57H)	79	08/95 → 09/98	**FCP845**	LUCAS/TRW				
1.8 Rsi (B/C57H)	79	08/95 → 09/98				**FCP558**	BENDIX	
Clio II								
1.2	40	03/98 →	**FCP393**	BENDIX				
1.2	40	03/98 →	**FCP845**	LUCAS/TRW				
1.2 i 16V	55	04/00 →	**FCP845**	LUCAS/TRW				
1.4 i 16V	70	10/99 → 07/00	**FCP845**	LUCAS/TRW				
1.4 i 16V	70	10/99 → 07/00				**FCP558**	BENDIX	
1.4 i K4J DOHC 16V	55	03/98 → 07/00	**FCP845**	LUCAS/TRW				
1.5 DCi	42	06/01 →	**FCP845**	LUCAS/TRW				
1.6 i K4M DOHC 16V	66	03/98 →	**FCP845**	LUCAS/TRW				
1.9 D	47	03/98 →	**FCP393**	BENDIX				
1.9 DTi	59	02/00 →	**FCP845**	LUCAS/TRW				
2.0 i RS	124	02/00 →	**FCP406**	LUCAS/TRW				
2.0 i RS	124	02/00 →				**FCP558**	BENDIX	
2.0 i RS	132	01/04 →	**FCP406**	LUCAS/TRW				
2.0 i RS	132	01/04 →				**FCP558**	BENDIX	
3.0 V6 Sport	166	11/00 → 12/02	**FCP1348**	BREMBO				
3.0 V6 Sport	166	11/00 → 12/02	**FRP3083**	AP RACING				
3.0 V6 Sport	166	11/00 → 12/02				**FCP1348**	BREMBO	
3.0 V6 Sport	187	12/02 → 12/04	**FCP1348**	BREMBO				
3.0 V6 Sport	187	12/02 → 12/04	**FRP3083**	AP RACING				
3.0 V6 Sport	187	12/02 → 12/04				**FCP1348**	BREMBO	
Super 1600		01/01 →	**FRP216**	AP RACING				
Super 1600		01/01 →				**FCP342**	AP RACING	
Clio III								
1.2 i	48	05/06 →	**FCP1617**	LUCAS/TRW				
1.2 i	48	05/06 →				**FCP1491**	LUCAS/TRW	
1.2 i	55	05/06 →	**FCP1617**	LUCAS/TRW				
1.2 i	55	05/06 →				**FCP1491**	LUCAS/TRW	
1.2 i	58	05/06 →	**FCP1617**	LUCAS/TRW				
1.2 i	58	05/06 →				**FCP1491**	LUCAS/TRW	
1.4 i	72	05/06 →	**FCP1617**	LUCAS/TRW				
1.4 i	72	05/06 →				**FCP1491**	LUCAS/TRW	
1.5 Dci	50	05/06 →	**FCP1617**	LUCAS/TRW				
1.5 Dci	50	05/06 →				**FCP1491**	LUCAS/TRW	
1.5 Dci	60	05/06 →	**FCP1617**	LUCAS/TRW				

For material availability see page 16-18 / Per la disponibilità materiali vedere a pagina 16-18

FERODO RACING
Updated on November 2020

...RENAULT

	kW				NOTE			NOTE
...Clio III								
1.5 Dci	60	05/06 →				**FCP1491**	LUCAS/TRW	
1.5 Dci	63	05/06 →	**FCP1617**	LUCAS/TRW				
1.5 Dci	63	05/06 →				**FCP1491**	LUCAS/TRW	
1.5 Dci	76	05/06 →	**FCP1617**	LUCAS/TRW				
1.5 Dci	76	05/06 →				**FCP1491**	LUCAS/TRW	
1.5 Dci	78	05/06 →	**FCP1617**	LUCAS/TRW				
1.5 Dci	78	05/06 →				**FCP1491**	LUCAS/TRW	
1.6 16V	65	06/05 → 10/07	**FCP1617**	LUCAS/TRW				
1.6 16V	65	06/05 → 10/07				**FCP1491**	LUCAS/TRW	
1.6 16V	82	06/05 →	**FCP1617**	LUCAS/TRW				
1.6 16V	82	06/05 →				**FCP1491**	LUCAS/TRW	
1.6 16V	94	11/07 →	**FCP1617**	LUCAS/TRW				
1.6 16V	94	11/07 →				**FCP1491**	LUCAS/TRW	
2.0 i RS	145	01/06 →	**FCP1667**	BREMBO				
2.0 i RS	145	01/06 →				**FCP1491**	LUCAS/TRW	
2.0 i RS	148	01/06 →	**FCP1667**	BREMBO				
2.0 i RS	148	01/06 →				**FCP1491**	LUCAS/TRW	
R3	170	01/08 → 12/08	**FCP1667**	BREMBO				
R3	170	01/08 → 12/08				**FCP1491**	LUCAS/TRW	
R3	170	01/09 →	**FCP1667**	BREMBO				
R3	170	01/09 →				**FRP3056**	AP RACING	
Clio IV								
1.6 RS	147	03/13 →	**FCP4249**	ATE	320mm disc			
1.6 RS	147	03/13 →				**FCP1491**	LUCAS/TRW	
CLIO IV Grandtour								
0.9 TCe 90	66	01/13 →	**FCP1617**	LUCAS/TRW	Brake system 17"			
1.2 16V	54	01/13 →	**FCP1617**	LUCAS/TRW	Brake system 17"			
1.2 TCe 120	88	03/13 →	**FCP1617**	LUCAS/TRW	Brake system 17"			
1.5 dCi 75	55	01/13 →	**FCP1617**	LUCAS/TRW	Brake system 17"			
1.5 dCi 90	66	01/13 →	**FCP1617**	LUCAS/TRW	Brake system 17"			
Clio V								
Rally		01/20 →	**FRP3158**	MANDO				
Rally		01/20 →				**FCP541**	LUCAS/TRW	
Espace I								
2.0 J/S112	78	01/84 → 01/91	**FCP393**	BENDIX				
2.0 J/S112	78	01/84 → 01/91	**FCP845**	LUCAS/TRW				
2.0 J/S112	78	01/84 → 01/91				**FCP72**	BENDIX	ABS
2.0 J116	87	01/87 → 01/91	**FCP393**	BENDIX				
2.0 J116	87	01/87 → 01/91	**FCP845**	LUCAS/TRW				
2.0 J116	87	01/87 → 01/91				**FCP72**	BENDIX	ABS
2.0 Quadra	87	01/87 → 01/91	**FCP393**	BENDIX				
2.0 Quadra	87	01/87 → 01/91				**FCP72**	BENDIX	ABS
2.1 TD	65	01/84 → 12/90	**FCP845**	LUCAS/TRW				
2.1 TD	65	01/84 → 12/90				**FCP72**	BENDIX	ABS
2.2 J117		01/87 → 01/91	**FCP845**	LUCAS/TRW				
2.2 J117		01/87 → 01/91				**FCP72**	BENDIX	ABS
2.2 Quadra	81	01/88 → 12/90	**FCP845**	LUCAS/TRW				
2.2 Quadra	81	01/88 → 12/90				**FCP72**	BENDIX	ABS
Espace II								
2.0	87	01/91 → 10/96	**FCP393**	BENDIX				
2.0	87	01/91 → 10/96				**FCP72**	BENDIX	ABS
2.1 TD	65	01/91 → 05/92	**FCP406**	LUCAS/TRW				
2.1 TD	65	01/91 → 05/92				**FCP72**	BENDIX	ABS
2.2	79	01/91 → 10/96	**FCP406**	LUCAS/TRW				
2.2	79	01/91 → 10/96				**FCP72**	BENDIX	ABS
2.2 i	79	05/92 → 10/96	**FCP406**	LUCAS/TRW				
2.8 V6 (J638)	110	01/91 → 10/96	**FCP406**	LUCAS/TRW				
2.8 V6 (J638)	110	01/91 → 10/96				**FCP72**	BENDIX	
2.9 V6 24V		10/96 → 04/99	**FCP406**	LUCAS/TRW				
2.9 V6 24V		10/96 → 04/99				**FCP72**	BENDIX	
2.9 V6 24V	140	01/91 → 09/96	**FCP406**	LUCAS/TRW				
2.9 V6 24V	140	01/91 → 09/96				**FCP72**	BENDIX	
Espace III								
2.0 i	84	11/96 → 10/02				**FCP878**	BREMBO	
2.0 i 16V	103	10/98 → 10/02				**FCP878**	BREMBO	

For material availability see page 16-18 / Per la disponibilità materiali vedere a pagina 16-18

...RENAULT	kW				NOTE			NOTE
Espace III (JE0_)								
2.2 DCi		10/00 → 10/02				**FCP1491**	LUCAS/TRW	
3.0i V6 24V		07/00 → 10/02				**FCP1491**	LUCAS/TRW	
Espace IV								
1.9 dCi	88	11/02 →				**FCP1540**	ATE	
2.0 i	127	11/02 →				**FCP1540**	ATE	
2.0 i Turbo	120	11/02 →				**FCP1540**	ATE	
2.2 dCi	110	11/02 →				**FCP1540**	ATE	
3.0 i V6 24v	133	11/02 →				**FCP1540**	ATE	
3.5 i V6	177	11/02 →				**FCP1540**	ATE	
Express								
1.0 F400	31	10/85 → 12/92	**FCP393**	BENDIX				
1.0 F400	31	10/85 → 12/92	**FCP845**	LUCAS/TRW				
1.0 F400	31	10/85 → 12/92	**FCP881**	BENDIX				
1.1 F401	34	10/85 → 12/92	**FCP393**	BENDIX				
1.1 F401	34	10/85 → 12/92	**FCP845**	LUCAS/TRW				
1.1 F401	34	10/85 → 12/92	**FCP881**	BENDIX				
1.1 i F401	34	01/88 → 12/92	**FCP393**	BENDIX				
1.1 i F401	34	01/88 → 12/92	**FCP845**	LUCAS/TRW				
1.2		01/91 →	**FCP393**	BENDIX				
1.2		01/91 →	**FCP845**	LUCAS/TRW				
1.2 i		01/95 →	**FCP393**	BENDIX				
1.2 i		01/95 →	**FCP845**	LUCAS/TRW				
1.4 i		01/90 →	**FCP393**	BENDIX				
1.4 i		01/90 →	**FCP845**	LUCAS/TRW				
1.4 Not inj	43, 44	03/86 → 12/94	**FCP393**	BENDIX				
1.4 Not inj	43, 44	03/86 → 12/94	**FCP845**	LUCAS/TRW				
1.4 Not inj	43, 44	03/86 → 12/94	**FCP881**	BENDIX				
1.6 D F404	40	07/86 → 07/88	**FCP393**	BENDIX				
1.6 D (F404)	40	10/85 → 07/88	**FCP881**	BENDIX				
1.6 D (F404)	40	10/85 → 12/92	**FCP393**	BENDIX				
1.6 D (F404)	40	07/88 → 12/92	**FCP845**	LUCAS/TRW				
1.9 D	40, 47	01/90 →	**FCP393**	BENDIX				
1.9 D	40, 47	01/90 →	**FCP845**	LUCAS/TRW				
1.9 D	40, 47	01/90 →	**FCP881**	BENDIX				
Extra								
1.0		10/85 → 12/92	**FCP393**	BENDIX				
1.0		10/85 → 12/92	**FCP845**	LUCAS/TRW				
1.0		10/85 → 12/92	**FCP881**	BENDIX				
1.1	34	10/85 → 12/94	**FCP393**	BENDIX				
1.1	34	10/85 → 12/94	**FCP845**	LUCAS/TRW				
1.1	34	10/85 → 12/94	**FCP881**	BENDIX				
1.4	43	03/86 → 12/94	**FCP393**	BENDIX				
1.4	43	03/86 → 12/94	**FCP845**	LUCAS/TRW				
1.4 i	44	01/90 → 08/97	**FCP393**	BENDIX				
1.4 i	44	01/90 → 08/97	**FCP845**	LUCAS/TRW				
1.4 i	44	01/90 → 08/97	**FCP881**	BENDIX				
1.4 i	54	01/90 → 08/97	**FCP393**	BENDIX				
1.4 i	54	01/90 → 08/97	**FCP845**	LUCAS/TRW				
1.4 i	54	01/90 → 08/97	**FCP881**	BENDIX				
1.4 i	58	01/90 → 08/97	**FCP393**	BENDIX				
1.4 i	58	01/90 → 08/97	**FCP845**	LUCAS/TRW				
1.4 i	58	01/90 → 08/97	**FCP881**	BENDIX				
1.4 i	59	01/90 → 08/97	**FCP393**	BENDIX				
1.4 i	59	01/90 → 08/97	**FCP845**	LUCAS/TRW				
1.4 i	59	01/90 → 08/97	**FCP881**	BENDIX				
1.6 D	40	10/85 → 12/92	**FCP393**	BENDIX				
1.6 D	40	10/85 → 12/92	**FCP845**	LUCAS/TRW				
1.6 D	40	10/85 → 12/92	**FCP881**	BENDIX				
1.9 D	47	01/90 → 11/98	**FCP393**	BENDIX				
1.9 D	47	01/90 → 11/98	**FCP845**	LUCAS/TRW				
1.9 D	47	01/90 → 11/98	**FCP881**	BENDIX				
Fuego								
1.4	46	03/80 → 12/86	**FCP393**	BENDIX				
1.4	46	03/80 → 12/86	**FCP845**	LUCAS/TRW				
1.4	46	07/83 → 12/86	**FCP393**	BENDIX				
1.4	46	07/83 → 12/86	**FCP845**	LUCAS/TRW				
1.6	70, 92	03/80 → 07/83	**FCP393**	BENDIX				
1.6	70, 92	03/80 → 07/83	**FCP845**	LUCAS/TRW				
1.6 (Turbo)	92	07/83 → 12/86	**FCP845**	LUCAS/TRW				
1.6 (Turbo)	92	07/83 → 12/86				**FCP72**	BENDIX	
1.6 TL-GTL (R1361)	52	07/83 → 12/86	**FCP393**	BENDIX				
1.6 TL-GTL (R1361)	52	07/83 → 12/86	**FCP845**	LUCAS/TRW				
1.6 TS-GTS (R1362)	70	07/83 → 12/86	**FCP393**	BENDIX				

For material availability see page 16-18 / Per la disponibilità materiali vedere a pagina 16-18

FERODO RACING
Updated on November 2020

...RENAULT

	kW				NOTE			NOTE
...Fuego								
2.0	74	07/80 → 07/83	**FCP845**	LUCAS/TRW				
2.0	74	07/80 → 12/86	**FCP393**	BENDIX				
2.0	74	07/83 → 12/86	**FCP393**	BENDIX				
2.1 D R1362 TS GTS	65	01/83 → 12/86	**FCP393**	BENDIX				
2.1 D TS-GTS (R1362)	65	01/80 → 12/86	**FCP393**	BENDIX				
2.1 TD (R1366)	65	07/83 → 12/86	**FCP845**	LUCAS/TRW				
2.2 Turbo (R1365)	74	01/84 → 12/86	**FCP845**	LUCAS/TRW				
2.2 Turbo (R1365)	74	01/84 → 12/86				**FCP72**	BENDIX	
Laguna								
1.6 16V		07/98 → 12/00	**FCP406**	LUCAS/TRW	ABS			
1.8		02/97 → 06/98	**FCP406**	LUCAS/TRW				
1.8	66, 69	01/94 → 01/97	**FCP406**	LUCAS/TRW	ABS			
1.8	66, 69	01/94 → 01/97				**FCP878**	BREMBO	ABS
1.8 i	66, 69	10/94 → 01/97	**FCP406**	LUCAS/TRW				
1.8 i	66, 69	10/94 → 01/97				**FCP878**	BREMBO	
1.8 Nevada	66, 69	11/95 → 06/98	**FCP406**	LUCAS/TRW				
1.9 16V	103	06/95 → 06/98	**FCP406**	LUCAS/TRW	ABS			
1.9 16V	103	06/95 → 06/98				**FCP878**	BREMBO	ABS
1.9 DCi	79	09/99 → 02/01	**FCP565**	LUCAS/TRW				
1.9 DTi	72	01/99 → 02/01	**FCP406**	LUCAS/TRW				
2.0	83	01/94 → 01/97	**FCP406**	LUCAS/TRW	ABS			
2.0	83	01/94 → 01/97				**FCP878**	BREMBO	ABS
2.0	83	02/97 → 03/01	**FCP406**	LUCAS/TRW				
2.0 (B/K56M) 16V	103	01/95 → 06/98	**FCP406**	LUCAS/TRW				
2.0 Baccara (B56H)	83	01/94 → 03/01	**FCP406**	LUCAS/TRW				
2.0 i	83	07/94 → 01/97	**FCP406**	LUCAS/TRW				
2.0 i	83	07/94 → 01/97				**FCP878**	BREMBO	
2.0 Nevada	83	11/95 → 06/98	**FCP406**	LUCAS/TRW				
2.2 D	61	01/94 → 01/97	**FCP406**	LUCAS/TRW				
2.2 D	61	01/94 → 01/97				**FCP878**	BREMBO	ABS
2.2 D	61	02/97 → 06/98	**FCP406**	LUCAS/TRW				
2.2 D Nevada	61	11/95 → 06/98	**FCP406**	LUCAS/TRW				
2.2 D Nevada	61	11/95 → 06/98				**FCP878**	BREMBO	
2.2 TD 12V	83	07/98 → 02/01	**FCP406**	LUCAS/TRW				
2.2 TD 12V	83	01/94 → 01/97	**FCP406**	LUCAS/TRW				
2.2 TD 12V	83	01/94 → 01/97				**FCP878**	BREMBO	ABS
2.2 TD 12V	83	02/97 → 02/01	**FCP406**	LUCAS/TRW				
2.9 V6 24V	140	04/97 → 02/01	**FCP406**	LUCAS/TRW				
2.9 V6 24V	140	04/97 → 02/01				**FCP878**	BREMBO	
3.0 V6 24V	123, 140	01/94 → 01/97	**FCP406**	LUCAS/TRW				
3.0 V6 24V	123, 140	01/94 → 01/97				**FCP878**	BREMBO	ABS
3.0 V6 24V	123, 140	02/97 → 06/98	**FCP406**	LUCAS/TRW				
3.0 V6, Nevada 24V	123, 140	02/97 → 06/98	**FCP406**	LUCAS/TRW				
Laguna Coupe (DT0/1)								
2.0 16V Turbo	125	09/08 →	**FCP4249**	ATE				
2.0 dCi	127	09/08 →	**FCP4249**	ATE				
2.0 dCi (DT01, DT09, DT12, DT1D)	110	09/08 →	**FCP4249**	ATE				
2.0 dCi GT (DT11, DT1E, DT1N)	131	03/08 →	**FCP4249**	ATE				
2.0 GT	150	09/08 →	**FCP4249**	ATE				
Laguna II								
1.6 i 16V	76	03/01 →				**FCP1540**	ATE	
1.6 i Berline 16V	79	03/01 →				**FCP1540**	ATE	
1.6 i Grandtour 16V	76	03/01 →				**FCP1540**	ATE	
1.8 i 16V	86	03/01 →				**FCP1540**	ATE	
1.8 i Berline/Grandtour 16V	86	03/01 →				**FCP1540**	ATE	
1.9 dCi	88	03/01 →				**FCP1540**	ATE	
1.9 dCi Berline/Grandtour	88	03/01 →				**FCP1540**	ATE	
2.0 i Berline/Grandtour 16V	103	03/01 →				**FCP1540**	ATE	
2.2 dCi Berline/Grandtour	110	03/01 →				**FCP1540**	ATE	
3.0 i Berline/Grandtour 24v	152	03/01 →				**FCP1540**	ATE	
Laguna III								
2.0 dCi (BT08, BT0K, BT0J, BT14, BT1A, BT1D)	96	10/07 →	**FCP4249**	ATE				
2.0 Hi-Flex (BT1H)	103	06/09 →	**FCP4249**	ATE				
2.0 Hi-Flex Estate/Break (KT1H)	103	06/09 →	**FCP4249**	ATE				
3.0 dCi (BT03)	173	09/08 →	**FCP4249**	ATE				
3.0 dCi Coupe' (DT0L)	177	01/12 →	**FCP4249**	ATE				
3.0 dCi Coupe' (DT0L)	177	01/12 →				**FCP1931**	ATE	
3.0 dCi Estate/Break (KT03)	173	01/08 →	**FCP4249**	ATE				
3.5 (BT0C/BT0P)	175	09/08 →	**FCP4249**	ATE				
3.5 Coupe' (DT0C/DT0P)	175	09/08 →	**FCP4249**	ATE				
3.5 Estate/Break (KT0C/KT0P)	175	04/08 →	**FCP4249**	ATE				

For material availability see page 16-18 / Per la disponibilità materiali vedere a pagina 16-18

...RENAULT

	kW				NOTE			NOTE
Laguna III (BT0/1)								
2.0 16V (BT05, BT0F, BT0W)	103	10/07 →	**FCP4249**	ATE				
2.0 16V Turbo	125	10/07 →	**FCP4249**	ATE				
2.0 dCi (BT01, BT09, BT12, BT1S)	110	10/07 →	**FCP4249**	ATE				
2.0 dCi (BT0M, BT0N, BT19)	127	01/08 →	**FCP4249**	ATE				
2.0 dCi GT (BT1E, BT1N)	131	03/08 →	**FCP4249**	ATE				
2.0 GT	150	03/08 →	**FCP4249**	ATE				
Laguna III Grandtour (KT0/1)								
2.0 16V (KT0F, KT0W)	103	10/07 →	**FCP4249**	ATE				
2.0 16V Turbo	125	10/07 →	**FCP4249**	ATE				
2.0 dCi (KT01, KT09, KT12, KT1S)	110	10/07 →	**FCP4249**	ATE				
2.0 dCi (KT0M, KT0N, KT19)	127	01/08 →	**FCP4249**	ATE				
2.0 dCi GT (KT11, KT1E, KT1N)	131	03/08 →	**FCP4249**	ATE				
2.0 GT	150	03/08 →	**FCP4249**	ATE				
Latitude								
3.0 dCi (L70G)	177	02/11 →	**FCP4249**	ATE				
Logan								
1.4 8v (KS0A)	55	10/07 →	**FCP845**	LUCAS/TRW				
1.4 8v (LS0A/LS0C/LS0E)	55	08/04 →	**FCP845**	LUCAS/TRW				
1.6 8v (LS0B/LS0D)	64	08/05 →	**FCP845**	LUCAS/TRW				
Master								
2.0	58	01/79 → 09/94	**FCP817**	LUCAS/TRW				
2.0	59	01/79 → 09/94	**FCP817**	LUCAS/TRW				
2.0	60	01/79 → 10/97	**FCP817**	LUCAS/TRW				
2.1	46	01/79 → 10/97	**FCP817**	LUCAS/TRW				
2.2	71	01/79 → 10/97	**FCP817**	LUCAS/TRW				
2.4 D	50	01/79 → 10/97	**FCP817**	LUCAS/TRW				
2.4 D	52	01/79 → 10/97	**FCP817**	LUCAS/TRW				
2.4 D	53	01/79 → 10/97	**FCP817**	LUCAS/TRW				
2.5 D	59	01/79 → 10/97	**FCP817**	LUCAS/TRW				
2.5 D	69	01/79 → 10/97	**FCP817**	LUCAS/TRW				
2.5 D	70	01/79 → 10/97	**FCP817**	LUCAS/TRW				
Megane								
1.4 i		03/99 → 08/02	**FCP845**	LUCAS/TRW				
1.4 i	52, 55	10/95 → 02/99	**FCP845**	LUCAS/TRW				
1.6 Break		03/99 → 08/02	**FCP845**	LUCAS/TRW				
1.6 Cabrio 16V		03/99 → 08/02	**FCP565**	LUCAS/TRW				
1.6 i	55, 66	10/95 → 02/99	**FCP845**	LUCAS/TRW				
1.6 i Coupe	55, 66	02/96 → 02/99	**FCP845**	LUCAS/TRW				
1.6i Cabrio 16V		03/99 → 08/02	**FCP406**	LUCAS/TRW				
1.6i Cabrio 16V		03/99 → 08/02				**FCP1491**	LUCAS/TRW	
1.6i Classic		03/99 → 08/02				**FCP1491**	LUCAS/TRW	
1.6i Coupe		02/96 → 02/99	**FCP845**	LUCAS/TRW				
1.6i Coupe		02/96 → 02/99				**FCP1491**	LUCAS/TRW	
1.6i Coupe		03/99 → 08/02				**FCP1491**	LUCAS/TRW	
1.6i SW Estate		03/99 → 08/02	**FCP406**	LUCAS/TRW				
1.6i SW Estate		03/99 → 08/02	**FCP845**	LUCAS/TRW				
1.6i SW Estate		03/99 → 08/02				**FCP1491**	LUCAS/TRW	
1.8 i 16V	85	01/01 → 08/02				**FCP558**	BENDIX	
1.9 D	47, 66	10/95 → 08/02	**FCP845**	LUCAS/TRW				
1.9 DTi Break	66	03/99 → 08/02	**FCP565**	LUCAS/TRW				
1.9 DTi Classic	66	03/99 → 08/02	**FCP565**	LUCAS/TRW				
1.9 DTi Classic		03/99 → 08/02	**FCP406**	LUCAS/TRW				
1.9 DTi Classic		03/99 → 08/02				**FCP1491**	LUCAS/TRW	
1.9 DTi Coupe	66	03/99 → 08/02	**FCP565**	LUCAS/TRW				
1.9 DTi Coupe		03/99 → 08/02	**FCP406**	LUCAS/TRW				
1.9 DTi Coupe		03/99 → 08/02				**FCP1491**	LUCAS/TRW	
1.9 DTi SW Estate		03/99 → 08/02	**FCP406**	LUCAS/TRW				
1.9 DTi SW Estate		03/99 → 08/02				**FCP1491**	LUCAS/TRW	
1.9 TD	47, 66	10/95 → 02/99	**FCP845**	LUCAS/TRW				
2.0 Coupe,Coach	103	03/99 → 08/02	**FCP565**	LUCAS/TRW				
2.0 i	84	10/95 → 08/02	**FCP845**	LUCAS/TRW				
2.0 i 16V	108	10/95 → 08/02	**FCP406**	LUCAS/TRW				
2.0 i 16V	108	10/95 → 08/02				**FCP558**	BENDIX	
2.0 i Coach 16V	108	02/96 → 02/99	**FCP406**	LUCAS/TRW				
2.0 i Coupe	83	02/96 → 02/99	**FCP845**	LUCAS/TRW				
2.0 i Coupe 16V	108	02/96 → 02/99	**FCP406**	LUCAS/TRW				
2.0 T RS F1 Team R26	169	01/07 → 10/08	**FCP1667**	BREMBO				
2.0 T RS F1 Team R26	169	01/07 → 10/08				**FCP541**	LUCAS/TRW	
2.0i Coupe		02/96 → 02/99	**FCP845**	LUCAS/TRW				
2.0i Coupe		02/96 → 02/99				**FCP1491**	LUCAS/TRW	
2.0i Coupe 16V		02/96 → 02/99	**FCP406**	LUCAS/TRW				

For material availability see page 16-18 / Per la disponibilità materiali vedere a pagina 16-18

FERODO RACING
Updated on November 2020

...RENAULT	kW				NOTE			NOTE
...Megane								
2.0i Coupe 16V		02/96 → 02/99				FCP1491	LUCAS/TRW	
2.0i Coupe, Coach		03/99 → 08/02	FCP406	LUCAS/TRW				
2.0i Coupe, Coach		03/99 → 08/02				FCP1491	LUCAS/TRW	
Megane II								
1.4i 16V	72	09/02 →				FCP1491	LUCAS/TRW	
1.5 DCi	60	09/02 →				FCP1491	LUCAS/TRW	
1.6i 16V	83	09/02 →				FCP1491	LUCAS/TRW	
1.9 DCi	88	09/02 →				FCP1491	LUCAS/TRW	
2.0 20i Sport 16V Turbo	120	03/04 →	FCP1667	BREMBO				
2.0i 16V	99	09/02 →				FCP1491	LUCAS/TRW	
Megane III Coupe (DZ0/1_)								
2.0 R.S.	195	11/08 →	FCP1334	BREMBO				
2.0 R.S.	195	11/08 →				FCP1491	LUCAS/TRW	without el.handbrake, 300mm discs
2.0 R.S.	201	07/14 →	FCP1334	BREMBO				
2.0 R.S.	201	07/14 →				FCP1491	LUCAS/TRW	without el.handbrake, 300mm discs
Megane IV (B9A/M/N)								
1.8 RS 300hp	221	09/18 →	FCP1334	BREMBO				
1.8 RS 300hp	221	09/18 →				FCP1491	LUCAS/TRW	
Megane Scenic								
1.4 i	55	01/96 → 05/99	FCP845	LUCAS/TRW				
1.4 i	55	10/98 → 05/99	FCP845	LUCAS/TRW				
1.4 i 16V	70	06/99 →	FCP565	LUCAS/TRW				
1.4 i 16V	70	06/99 →				FCP541	LUCAS/TRW	
1.6 i	55, 66	01/96 → 05/99	FCP845	LUCAS/TRW				
1.6 i	55, 66	10/98 → 05/99	FCP845	LUCAS/TRW				
1.6 i 16V	80	06/99 →	FCP565	LUCAS/TRW				
1.6 i 16V	80	06/99 →				FCP541	LUCAS/TRW	
1.9 D	47	01/96 → 05/99	FCP406	LUCAS/TRW				
1.9 D	47	10/98 → 05/99	FCP406	LUCAS/TRW				
1.9 DCi	72	06/99 →	FCP565	LUCAS/TRW				
1.9 DCi	72	06/99 →				FCP541	LUCAS/TRW	
1.9 TD	66	01/96 →	FCP406	LUCAS/TRW				
1.9 TD	66	10/98 → 05/99	FCP406	LUCAS/TRW				
2.0 i	84	01/96 → 05/99	FCP406	LUCAS/TRW				
2.0 i 16V	103	06/99 →	FCP565	LUCAS/TRW				
2.0 i 16V	103	06/99 →				FCP541	LUCAS/TRW	
Modus								
1.2 i 16V	55	12/04 →	FCP1617	LUCAS/TRW				
1.4 i 16V	72	12/04 →	FCP1617	LUCAS/TRW				
1.5 DCi	50	12/04 →	FCP1617	LUCAS/TRW				
1.5 DCi	63	12/04 →	FCP1617	LUCAS/TRW				
1.6 i 16V	82	12/04 →	FCP1617	LUCAS/TRW				
R5								
1.4 Alpine Turbo	68	01/76 → 12/84				FCP360	BENDIX	
1.4 Alpine Turbo	68	01/81 → 12/84	FCP72	BENDIX				
Rapid								
0.9 F400		01/85 → 12/90	FCP881	BENDIX				
1.1 F401	33	07/85 → 12/88	FCP845	LUCAS/TRW				
1.1 F401	33	07/85 → 09/91	FCP881	BENDIX				
1.2	40	09/91 →	FCP393	BENDIX				
1.2	40	09/91 →	FCP845	LUCAS/TRW				
1.4		01/97 →	FCP393	BENDIX				
1.4		01/97 →	FCP845	LUCAS/TRW				
1.4	43, 44	07/85 → 06/87	FCP393	BENDIX				
1.4	43, 44	07/85 → 06/87	FCP845	LUCAS/TRW				
1.6 D	40	03/86 → 08/91	FCP845	LUCAS/TRW				
1.6 D	40	03/86 → 08/91	FCP881	BENDIX				
1.9 D F40	40, 47	01/97 → 07/98	FCP393	BENDIX				
1.9 D F40	40, 47	01/97 → 07/98	FCP845	LUCAS/TRW				
1.9 D F40	40, 47	09/91 → 07/98	FCP393	BENDIX				
1.9 D F40	40, 47	09/91 → 07/98	FCP845	LUCAS/TRW				
RAPID Box (F40_, G40_)								
1.4 (F402)	43	07/85 → 08/91	FCP393	BENDIX				
1.4 (F402)	43	07/85 → 08/91	FCP845	LUCAS/TRW				
1.4 (F40D)	58	01/94 → 03/98	FCP393	BENDIX				
1.4 (F40D)	58	01/94 → 03/98	FCP845	LUCAS/TRW				
1.4 (F40M)	44	03/86 → 08/91	FCP393	BENDIX				
1.4 (F40M)	44	03/86 → 08/91	FCP845	LUCAS/TRW				

For material availability see page 16-18 / Per la disponibilità materiali vedere a pagina 16-18

...RENAULT	kW				NOTE				NOTE
...RAPID Box (F40_, G40_)									
1.4 (F40U, F40V)	55	09/91 → 03/98	**FCP393**	BENDIX					
1.4 (F40U, F40V)	55	09/91 → 03/98	**FCP845**	LUCAS/TRW					
1.4 Cat (F407)	43	08/88 → 03/98	**FCP393**	BENDIX					
1.4 Cat (F407)	43	08/88 → 03/98	**FCP845**	LUCAS/TRW					
1.4 RN	44	09/91 → 08/93	**FCP393**	BENDIX					
1.4 RN	44	09/91 → 08/93	**FCP845**	LUCAS/TRW					
Safrane									
1.9 16V	100	04/92 → 01/97	**FCP406**	LUCAS/TRW					
1.9 16V	100	04/92 → 01/97				**FCP878**	BREMBO	ABS	
1.9 16V	100	02/97 → 12/00	**FCP406**	LUCAS/TRW					
2.0 i	77, 97	04/92 → 09/96	**FCP406**	LUCAS/TRW					
2.0 i	77, 97	04/92 → 09/96				**FCP878**	BREMBO	ABS	
2.0 i (B54E)		01/92 → 09/96	**FCP406**	LUCAS/TRW					
2.0 i (B54E)		01/92 → 09/96				**FCP878**	BREMBO		
2.0 i 16V	101	10/96 → 12/00	**FCP406**	LUCAS/TRW					
2.0 i 16V	101	10/96 → 12/00				**FCP878**	BREMBO		
2.1 TD	65	10/96 → 12/00	**FCP406**	LUCAS/TRW					
2.1 TD (B546)	65	04/92 → 09/96	**FCP406**	LUCAS/TRW					
2.1 TD (B546)	65	04/92 → 09/96				**FCP878**	BREMBO	ABS	
2.2 (B541)	79, 83	04/92 → 09/96	**FCP406**	LUCAS/TRW					
2.2 (B541)	79, 83	04/92 → 09/96				**FCP878**	BREMBO	ABS	
2.2 (B543)	101	04/92 → 09/96	**FCP406**	LUCAS/TRW					
2.2 (B543)	101	04/92 → 09/96				**FCP878**	BREMBO	ABS	
2.2 i B543	101	02/95 → 09/96	**FCP406**	LUCAS/TRW					
2.2 i B543	101	02/95 → 09/96				**FCP878**	BREMBO		
2.2 TD (B54G)	84	10/96 → 12/00	**FCP406**	LUCAS/TRW					
2.2 TD (B54G)	84	10/96 → 12/00				**FCP878**	BREMBO	ABS	
2.4		04/92 → 01/97	**FCP406**	LUCAS/TRW					
2.4		04/92 → 01/97				**FCP878**	BREMBO	ABS	
2.4		02/97 → 12/00	**FCP406**	LUCAS/TRW					
2.5 20V	123	10/96 → 12/00	**FCP406**	LUCAS/TRW					
2.5 20V	123	10/96 → 12/00				**FCP878**	BREMBO	ABS	
2.5 TD (B548)	83	04/92 → 09/96	**FCP406**	LUCAS/TRW					
2.5 TD (B548)	83	04/92 → 09/96				**FCP878**	BREMBO	ABS	
3.0 B54B		04/92 → 09/96	**FCP406**	LUCAS/TRW					
3.0 B54B		04/92 → 09/96				**FCP878**	BREMBO		
3.0 V6 (B54M)	124	10/96 → 12/00	**FCP406**	LUCAS/TRW					
3.0 V6 (B54M)	124	10/96 → 12/00				**FCP878**	BREMBO	ABS	
3.0 V6 Quadra (B544)	123	04/92 → 09/96	**FCP406**	LUCAS/TRW					
3.0 V6 Quadra (B544)	123	04/92 → 09/96				**FCP878**	BREMBO	ABS	
Scenic									
1.4i 16V		06/99 → 05/03	**FCP406**	LUCAS/TRW					
1.4i 16V		06/99 → 05/03				**FCP1491**	LUCAS/TRW		
1.6i 16V		06/99 → 05/03	**FCP406**	LUCAS/TRW					
1.6i 16V		06/99 → 05/03				**FCP1491**	LUCAS/TRW		
1.9 DCi	75	11/00 → 05/03	**FCP406**	LUCAS/TRW					
1.9 DCi	75	11/00 → 05/03				**FCP1491**	LUCAS/TRW		
1.9 DCi RX4	75	11/00 → 05/03	**FCP406**	LUCAS/TRW					
1.9 DCi RX4	75	11/00 → 05/03				**FCP1491**	LUCAS/TRW		
1.9 DTi		06/99 → 05/03	**FCP406**	LUCAS/TRW					
1.9 DTi		06/99 → 05/03				**FCP1491**	LUCAS/TRW		
2.0i 16V		06/99 → 05/03	**FCP406**	LUCAS/TRW					
2.0i 16V		06/99 → 05/03				**FCP1491**	LUCAS/TRW		
2.0i RX4 16V	102	06/00 → 05/03	**FCP406**	LUCAS/TRW					
2.0i RX4 16V	102	06/00 → 05/03				**FCP1491**	LUCAS/TRW		
Scenic II (JM0/1_)									
1.4i 16V	72	06/03 →				**FCP1491**	LUCAS/TRW		
1.5 DCi 16V	74	06/03 →				**FCP1491**	LUCAS/TRW		
1.6i 16V	83	06/03 →				**FCP1491**	LUCAS/TRW		
1.9DCi 16V	88	06/03 →				**FCP1491**	LUCAS/TRW		
2.0i 16V	99	06/03 →				**FCP1491**	LUCAS/TRW		
Spider									
2.0 16V	108	01/96 →	**FCP406**	LUCAS/TRW					
2.0 16V	108	01/96 →	**FCP565**	LUCAS/TRW					
SUPER 5 (B/C40_)									
1.4 (B/C402)	43	10/84 → 06/88	**FCP393**	BENDIX					
1.4 (B/C402)	43	10/84 → 06/88	**FCP845**	LUCAS/TRW					
1.4 (B/C402)	43	10/84 → 06/88	**FCP881**	BENDIX					
1.4 (B/C403)	52	10/84 → 07/89	**FCP393**	BENDIX					
1.4 (B/C403)	52	10/84 → 07/89	**FCP845**	LUCAS/TRW					
1.4 (B/C403)	52	10/84 → 07/89	**FCP881**	BENDIX					

For material availability see page 16-18 / Per la disponibilità materiali vedere a pagina 16-18

FERODO RACING
Updated on November 2020

	kW				NOTE			NOTE
...RENAULT								
...SUPER 5 (B/C40_)								
1.4 (B/C40J)	49	06/87 → 07/89	**FCP393**	BENDIX				
1.4 (B/C40J)	49	06/87 → 07/89	**FCP845**	LUCAS/TRW				
1.4 (B/C40J)	49	06/87 → 07/89	**FCP881**	BENDIX				
1.4 (B/C40M)	44	06/87 → 08/90	**FCP393**	BENDIX				
1.4 (B/C40M)	44	06/87 → 08/90	**FCP845**	LUCAS/TRW				
1.4 (B/C40M)	44	06/87 → 08/90	**FCP881**	BENDIX				
1.4 Cat (B/C/407)	43	10/85 → 12/96	**FCP393**	BENDIX				
1.4 Cat (B/C/407)	43	10/85 → 12/96	**FCP845**	LUCAS/TRW				
1.4 Cat (B/C/407)	43	10/85 → 12/96	**FCP881**	BENDIX				
1.4 Turbo (C405)	88	04/85 → 08/90	**FCP845**	LUCAS/TRW				
1.4 Turbo (C405)	88	04/85 → 08/90				**FCP558**	BENDIX	
1.4 Turbo GT (C405)	118	01/85 → 05/91	**FCP845**	LUCAS/TRW				
1.4 Turbo GT (C405)	118	01/85 → 05/91				**FCP558**	BENDIX	
Twingo								
1.1	40, 44	05/96 → 12/98	**FCP881**	BENDIX				
1.1	40, 44	01/98 →	**FCP845**	LUCAS/TRW				
1.2	40	03/93 → 05/96	**FCP881**	BENDIX				
1.2 i	44	09/00 →	**FCP845**	LUCAS/TRW				
1.2 i 16V	55	01/01 →	**FCP845**	LUCAS/TRW				
1.6 16V 133Cv		01/10 →	**FCP1441**	ATE				
1.6 16V 133Cv		01/10 →				**FCP1491**	LUCAS/TRW	
R2		01/10 → 12/10	**FCP1441**	ATE				
R2		01/10 → 12/10				**FCP1491**	LUCAS/TRW	
R2		01/11 →	**FRP3119**					
R2		01/11 →				**FCP1491**	LUCAS/TRW	
Twingo II								
1.2 8v (CN0D/GN0D)	43	03/07 →	**FCP845**	LUCAS/TRW				
1.5 dCi 8v (CN0E/GN0E)	47	03/07 →	**FCP845**	LUCAS/TRW				
Vel Satis								
2.0 i 16V	120	04/02 →				**FCP1540**	ATE	
2.2 dCi	85	04/02 →				**FCP1540**	ATE	
3.0 dCi V6	130	04/02 →				**FCP1540**	ATE	
3.5 i V6	177	04/02 →				**FCP1540**	ATE	
RENAULT-ALPINE								
1300								
1.3		03/73 → 06/76	**FCP72**	BENDIX				
1.3		03/73 → 06/76				**FCP72**	BENDIX	
1600								
1.6		03/73 → 06/76	**FCP72**	BENDIX				
1.6		03/73 → 06/76				**FCP72**	BENDIX	
2500								
2.5		02/85 →	**FCP845**	LUCAS/TRW				
2.5		02/85 →				**FCP393**	BENDIX	
2700								
2.7		10/76 → 12/80	**FCP72**	BENDIX				
2.7		10/76 → 12/80				**FCP72**	BENDIX	
2800								
2.8		02/85 → 02/90	**FCP845**	LUCAS/TRW				
2.8		02/85 → 02/90				**FCP393**	BENDIX	
3000								
3.0		06/91 →	**FCP406**	LUCAS/TRW				
3.0		06/91 →				**FCP72**	BENDIX	
A110								
1300		01/73 → 12/76				**FCP360**	BENDIX	
1600		01/73 → 12/76				**FCP360**	BENDIX	
GT4		01/17 →	**FRP3031**	BREMBO				
GT4		01/17 →				**FRP3156**	BREMBO	

For material availability see page 16-18 / Per la disponibilità materiali vedere a pagina 16-18

		kW				NOTE			NOTE
...RENAULT-ALPINE									
A110 II									
1.8		185	12/17 →	FCP1667	BREMBO				
A310 (GTA)									
1.4			01/71 → 08/83	FCP72	BENDIX				
1.4			01/71 → 08/83				FCP72	BENDIX	
A610 (GTA)									
3.0 (Turbo)			01/91 →	FCP406	LUCAS/TRW				
3.0 (Turbo)			01/91 →	FCP565	LUCAS/TRW				
Alpine (GTA)									
GT/V6 Turbo			09/85 → 12/90	FCP845	LUCAS/TRW				
GT/V6 Turbo			09/85 → 12/90				FCP393	BENDIX	
ROVER									
1500									
1.5 & TC Triumph		45, 55	01/70 → 12/74	FCP810	LUCAS/TRW				
1800									
1.8		56	01/72 → 12/74	FCP9	LUCAS/TRW				
1885									
All i Wolseley S		56	01/69 → 12/72	FCP9	LUCAS/TRW				
200 Convertible (XW)									
216 1.6i		90	01/92 → 11/99	FCP613	LUCAS/TRW	Vented			
216 1.6i		90	01/92 → 11/99				FCP472	AKEBONO	
216 1.6i 16V		82	01/96 → 11/99	FCP613	LUCAS/TRW	Vented			
200 Coupe (XW)									
216		82	01/96 → 12/97	FCP613	LUCAS/TRW	Vented			
216		82	01/96 → 12/97				FCP472	AKEBONO	
216		90	10/92 → 06/99	FCP613	LUCAS/TRW	Vented			
216		90	10/92 → 06/99				FCP472	AKEBONO	
220 GSi		100	05/94 → 06/99	FCP613	LUCAS/TRW				
220 GSi		100	05/94 → 06/99				FCP472	AKEBONO	
220 Turbo		147	10/92 → 06/99	FCP613	LUCAS/TRW				
220 Turbo		147	10/92 → 06/99				FCP472	AKEBONO	
200 Hatchback (RF)									
216 Si		82	11/95 → 03/00	FCP613	LUCAS/TRW	Vented			
216 Si		82	11/95 → 03/00				FCP472	AKEBONO	
200 Hatchback (XW)									
216 GSi		82	10/89 → 10/95	FCP613	LUCAS/TRW	Vented			
216 GSi		85	10/89 → 10/95	FCP613	LUCAS/TRW	Vented			
216 GTi		90	09/90 → 10/95	FCP613	LUCAS/TRW	Vented			
220 GTi		100	01/93 → 10/95	FCP613	LUCAS/TRW				
220 GTi		100	01/93 → 10/95				FCP472	AKEBONO	
220 GTi		103	09/91 → 10/95	FCP613	LUCAS/TRW				
220 GTi		103	09/91 → 10/95				FCP472	AKEBONO	
220 Turbo		147	01/93 → 10/95	FCP613	LUCAS/TRW				
220 Turbo		147	01/93 → 10/95				FCP472	AKEBONO	
214									
1.4		55	10/89 → 12/95	FCP613	LUCAS/TRW	Vented			
1.4		55	10/89 → 12/95				FCP472	AKEBONO	
1.4		66	10/89 → 12/95	FCP613	LUCAS/TRW	Vented			
1.4		66	10/89 → 12/95				FCP472	AKEBONO	
1.4		76	10/89 → 12/95	FCP613	LUCAS/TRW	Vented			
1.4		76	10/89 → 12/95				FCP472	AKEBONO	
1.4 16V		55, 76	03/95 → 06/99	FCP613	LUCAS/TRW				
1.4 16V		55, 76	03/95 → 06/99				FCP472	AKEBONO	
218									
1.8 16V		107	03/95 → 06/99	FCP613	LUCAS/TRW				
1.8 16V		107	03/95 → 06/99				FCP472	AKEBONO	
1.8 D		64, 65	03/91 → 12/95	FCP613	LUCAS/TRW	Vented			
1.8 D		64, 65	03/91 → 12/95				FCP472	AKEBONO	
1.8 i Coupe 16V			01/92 → 06/99	FCP613	LUCAS/TRW				
1.8 i Vi 16V			01/96 → 06/99	FCP613	LUCAS/TRW				
1.9 D		44, 47	03/91 → 12/95	FCP613	LUCAS/TRW	Vented			

For material availability see page 16-18 / Per la disponibilità materiali vedere a pagina 16-18

FERODO RACING

Updated on November 2020

...ROVER	kW				NOTE			NOTE
...218								
1.9 D	44, 47	03/91 → 12/95				FCP472	AKEBONO	
220								
2.0 D	63, 77	11/95 → 06/99	FCP613	LUCAS/TRW				
2.0 D SDi	77	01/96 → 06/99	FCP613	LUCAS/TRW				
2200								
2.2		01/72 → 12/74	FCP9	LUCAS/TRW				
25								
1.1	60	09/99 →	FCP613	LUCAS/TRW				
1.1	60	09/99 →				FCP472	AKEBONO	
1.4 16V	62, 76	07/99 →	FCP613	LUCAS/TRW				
1.4 16V	62, 76	07/99 →				FCP472	AKEBONO	
1.6 16V	80	07/99 →	FCP613	LUCAS/TRW				
1.6 16V	80	07/99 →				FCP472	AKEBONO	
1.8 16V	86, 107	07/99 →	FCP613	LUCAS/TRW				
1.8 16V	86, 107	07/99 →				FCP472	AKEBONO	
2.0 D	74	07/99 →	FCP613	LUCAS/TRW				
2.0 D	74	07/99 →				FCP472	AKEBONO	
400 (RT)								
416 Si	82	05/95 → 03/00	FCP613	LUCAS/TRW				
416 Si	82	05/95 → 03/00				FCP472	AKEBONO	
416 Si	83	05/95 → 03/00	FCP613	LUCAS/TRW				
416 Si	83	05/95 → 03/00				FCP472	AKEBONO	
416 Si	85	05/95 → 03/00	FCP613	LUCAS/TRW				
416 Si	85	05/95 → 03/00				FCP472	AKEBONO	
400 (XW)								
416 GSI	82	04/90 → 04/95	FCP613	LUCAS/TRW	Vented			
416 GSI	82	04/90 → 04/95				FCP472	AKEBONO	
416 GSI/GSE	85	04/90 → 04/95	FCP613	LUCAS/TRW	Vented			
416 GSI/GSE	85	04/90 → 04/95				FCP472	AKEBONO	
416 GTI	90	04/90 → 04/95	FCP613	LUCAS/TRW	Vented			
416 GTI	90	04/90 → 04/95				FCP472	AKEBONO	
416 GTI/GTE	96	04/90 → 04/95	FCP613	LUCAS/TRW	Vented			
416 GTI/GTE	96	04/90 → 04/95				FCP472	AKEBONO	
400 Hatchback (RT)								
416 Si	82	05/95 → 03/00	FCP613	LUCAS/TRW				
416 Si	82	05/95 → 03/00				FCP472	AKEBONO	
416 Si	83	06/95 → 03/00	FCP613	LUCAS/TRW				
416 Si	83	06/95 → 03/00				FCP472	AKEBONO	
416 Si	85	06/95 → 03/00	FCP613	LUCAS/TRW				
416 Si	85	06/95 → 03/00				FCP472	AKEBONO	
414								
1.4 16V	66, 76	03/95 → 06/99	FCP613	LUCAS/TRW				
1.4 16V	66, 76	03/95 → 06/99				FCP472	AKEBONO	
1.4 16V	66	03/90 → 12/95	FCP613	LUCAS/TRW	Vented			
1.4 16V	66	03/90 → 12/95				FCP472	AKEBONO	
1.4 16V	70	03/90 → 12/95	FCP613	LUCAS/TRW	Vented			
1.4 16V	70	03/90 → 12/95				FCP472	AKEBONO	
1.4 16V	76	03/90 → 12/95	FCP613	LUCAS/TRW	Vented			
1.4 16V	76	03/90 → 12/95				FCP472	AKEBONO	
418								
1.8 TD	65	03/90 → 12/95	FCP613	LUCAS/TRW	Vented			
1.8 TD	65	03/90 → 12/95				FCP472	AKEBONO	
1.8 TD	65	03/95 → 06/99	FCP613	LUCAS/TRW				
1.8 TD	65	03/95 → 06/99				FCP472	AKEBONO	
1.9 D	47	03/90 → 12/95	FCP613	LUCAS/TRW	Vented			
1.9 D	47	03/90 → 12/95				FCP472	AKEBONO	
420								
2.0 i ,Tourer, Turbo 16V	103, 152	01/91 → 12/96	FCP613	LUCAS/TRW				
2.0 i ,Tourer, Turbo 16V	103, 152	01/91 → 12/96				FCP472	AKEBONO	
2.0 i 16V	103	05/95 → 06/99	FCP613	LUCAS/TRW				
2.0 i 16V	103	05/95 → 06/99				FCP472	AKEBONO	
2.0 i Sli,Gsi,Exec.,Sport 16V		01/91 → 12/95	FCP613	LUCAS/TRW				
2.0 i Sli,Gsi,Exec.,Sport 16V		01/91 → 12/95				FCP472	AKEBONO	
2.0 TD	63	05/95 → 06/99	FCP613	LUCAS/TRW				
2.0 TD	63	05/95 → 06/99				FCP472	AKEBONO	
2.0 TDi	77	05/95 → 06/99	FCP613	LUCAS/TRW				

For material availability see page 16-18 / Per la disponibilità materiali vedere a pagina 16-18

...ROVER	kW				NOTE			NOTE
...420								
2.0 TDi	77	05/95 → 06/99				FCP472	AKEBONO	
45								
1.4 16V	76	09/99 →	FCP613	LUCAS/TRW				
1.4 16V	76	09/99 →				FCP472	AKEBONO	
1.6 16V	80	09/99 →	FCP613	LUCAS/TRW				
1.6 16V	80	09/99 →				FCP472	AKEBONO	
1.8 16V	86	09/99 →	FCP613	LUCAS/TRW				
1.8 16V	86	09/99 →				FCP472	AKEBONO	
618								
1.8 16V	84	04/93 → 06/99	FCP905	AKEBONO	15" wheel			
1.8 16V	84	04/93 → 06/99				FCP956	NISSIN	
620								
2.0 16V		04/93 → 02/96	FCP905	AKEBONO	15" wheel			
2.0 16V		04/93 → 02/96				FCP956	NISSIN	
2.0 TD	77	04/93 → 06/99	FCP905	AKEBONO	15" wheel			
2.0 TD	77	04/93 → 06/99				FCP956	NISSIN	
623								
2.3 16V	116	04/93 → 06/99	FCP905	AKEBONO	15" wheel			
2.3 16V	116	04/93 → 06/99				FCP956	NISSIN	
820								
2.0 16V	98, 100	11/91 → 09/93	FCP613	LUCAS/TRW				
2.0 Sterling 16V	100	01/93 → 10/98	FCP613	LUCAS/TRW				
2.0 Turbo 16V	132	11/91 → 09/93	FCP613	LUCAS/TRW				
825								
2.5	86	01/93 → 10/98	FCP613	LUCAS/TRW				
2.5 Sterling	129	01/93 → 10/98	FCP613	LUCAS/TRW				
827								
2.7 24V	124	01/93 → 01/96	FCP613	LUCAS/TRW				
2.7 Sterling 24V		01/93 → 01/96	FCP613	LUCAS/TRW				
Allegro								
		01/73 → 12/82	FCP810	LUCAS/TRW				
All i		01/73 → 12/82	FCP810	LUCAS/TRW				
Cityrover								
1.4 i 16V	62	01/04 →	FCP613	LUCAS/TRW				
Dolomite								
1.3	42	01/76 → 12/80	FCP809	LUCAS/TRW				
1.5	52	01/76 → 12/80	FCP809	LUCAS/TRW				
1.9	67	01/76 → 12/80	FCP809	LUCAS/TRW				
2.0	92	01/73 → 12/80	FCP809	LUCAS/TRW				
Healey								
3.0 BJ7 Mark II	100	01/62 → 12/64	FCP9	LUCAS/TRW				
3.0 BJ8 Mark III	112	01/64 → 12/67	FCP167	LUCAS/TRW				
3.0 BJ8 Mark III	112	01/64 → 12/67				FCP815	LUCAS/TRW	
Ital								
1.3	44	01/80 → 12/84	FCP810	LUCAS/TRW				
1.3 440	44	05/82 → 12/87	FCP810	LUCAS/TRW				
1.3 575	44	05/82 → 12/87	FCP810	LUCAS/TRW				
1.5 440		05/82 → 12/87	FCP810	LUCAS/TRW				
1.5 575		05/82 → 12/87	FCP810	LUCAS/TRW				
1.7	59	01/80 → 12/84	FCP810	LUCAS/TRW				
1.7 440	59	05/82 → 12/87	FCP810	LUCAS/TRW				
1.7 575	59	05/82 → 12/87	FCP810	LUCAS/TRW				
2.0	69	01/80 → 12/84	FCP810	LUCAS/TRW				
Ital van								
1.3 440, 575	44	05/82 → 12/87	FCP810	LUCAS/TRW				
1.5 440, 575		05/82 → 12/87	FCP810	LUCAS/TRW				
1.7 440, 575	59	05/82 → 12/87	FCP810	LUCAS/TRW				

For material availability see page 16-18 / Per la disponibilità materiali vedere a pagina 16-18

FERODO RACING
Updated on November 2020

	kW				NOTE			NOTE
...ROVER								
Marina								
		01/71 → 12/80	FCP810	LUCAS/TRW				
1.3 i 440		01/72 → 12/78	FCP810	LUCAS/TRW				
1.3 i 575		01/72 → 12/78	FCP810	LUCAS/TRW				
1.8 i 440		01/72 → 12/78	FCP810	LUCAS/TRW				
1.8 i 440		01/79 → 04/82	FCP810	LUCAS/TRW				
1.8 i 575		01/72 → 12/78	FCP810	LUCAS/TRW				
1.8 i 575		01/79 → 04/82	FCP810	LUCAS/TRW				
All i		01/71 → 12/80	FCP810	LUCAS/TRW				
Marina van								
1.3 440, 575		01/72 → 12/78	FCP810	LUCAS/TRW				
1.8 440, 575		01/72 → 12/78	FCP810	LUCAS/TRW				
1.8 440, 575		01/79 → 04/82	FCP810	LUCAS/TRW				
Maxi								
1.5	46	01/69 → 12/82	FCP810	LUCAS/TRW				
1.7	54	01/69 → 12/82	FCP810	LUCAS/TRW				
Metro								
1.0	31, 35	10/80 → 05/90	FCP840	LOCKHEED				
1.0 i	31, 35	01/85 → 05/90	FCP840	LOCKHEED				
1.3	45, 46	10/80 → 05/90	FCP840	LOCKHEED				
1.3 i	45, 46	01/84 → 05/90	FCP840	LOCKHEED				
Metro Van								
1.3		01/82 → 05/90	FCP840	LOCKHEED				
1.3 i		01/84 → 05/90	FCP840	LOCKHEED				
Mini								
1.3	41, 53	01/69 → 12/80	FCP825	LOCKHEED	10" wheel			
1.3 Cooper		01/63 → 12/69	FCP342	LOCKHEED				
1.3 Cooper S		01/63 → 12/71	FCP825	LOCKHEED				
P5B								
3.5 Rover V8		01/68 → 12/69	FCP9	LUCAS/TRW				
P6								
3.5 Rover V8		01/68 → 12/69	FCP9	LUCAS/TRW				
Princess								
		01/75 → 12/82	FCP832	LOCKHEED				
All i		01/75 → 12/82	FCP832	LOCKHEED				
Six								
All i Wolseley		01/72 → 12/74	FCP9	LUCAS/TRW				
Wolseley		01/72 → 12/74	FCP9	LUCAS/TRW				
Spitfire								
1.1		01/62 → 12/80	FCP809	LUCAS/TRW				
Streetwise								
1.4 i	62	08/03 →	FCP613	LUCAS/TRW				
2.0 TD	74	08/03 →	FCP613	LUCAS/TRW				
Toledo								
		01/70 → 12/76	FCP810	LUCAS/TRW				
All i		01/70 → 12/76	FCP810	LUCAS/TRW				
SAAB								
9-3 (YS3D)								
2.0 i	96	02/98 → 09/02	FCP1068	ATE				
2.0 SE Turbo	147	02/98 → 09/02	FCP1068	ATE				
2.0 Turbo	113	10/98 → 09/02	FCP1068	ATE				
2.0 Turbo	136	02/98 → 09/02	FCP1068	ATE				
2.2 TiD	85	02/98 → 11/00	FCP1068	ATE				
2.2 TiD	92	11/00 → 09/02	FCP1068	ATE				
2.3 i	110	02/98 → 09/02	FCP1068	ATE				
2.3 Turbo	165	10/98 → 09/02	FCP1068	ATE				

For material availability see page 16-18 / Per la disponibilità materiali vedere a pagina 16-18

...SAAB

9-3 (YS3F)

	kW				NOTE			NOTE
1.8	90	11/03 → 03/09	**FCP1520**	ATE				
1.8t BioPower	110	01/07 →	**FCP1706**	ATE	For Rims 17 inch			
1.8t BioPower	110	01/07 →				**FCP1931**	ATE	Until 12/08
1.8t BioPower	129	05/09 →	**FCP1706**	ATE	For Rims 17 inch			
1.8t BioPower	129	05/09 →				**FCP1931**	ATE	
1.9 TDi	110	04/04 → 07/12	**FCP1520**	ATE				
1.9 TDi	88	08/04 → 07/12	**FCP1520**	ATE				
1.9 TTiD	118	12/07 →	**FCP1706**	ATE	For Rims 17 inch			
1.9 TTiD	118	12/07 →	**FCP1520**	ATE	Not for Rims 17 inch			
1.9 TTiD	118	12/07 →				**FCP1931**	ATE	
1.9 TTiD	132	12/07 →	**FCP1706**	ATE	For Rims 17 inch			
1.9 TTiD	132	12/07 →	**FCP1520**	ATE	Not for Rims 17 inch			
1.9 TTiD	132	12/07 →				**FCP1931**	ATE	Until 12/08
1.9 TTiD	96	12/07 →	**FCP1706**	ATE	For Rims 17 inch			
1.9 TTiD	96	12/07 →	**FCP1520**	ATE	Not for Rims 17 inch			
1.9 TTiD	96	12/07 →				**FCP1931**	ATE	
2.0	143	04/06 → 09/07	**FCP1520**	ATE				
2.0 t	120	01/07 →	**FCP1706**	ATE	For Rims 17 inch			
2.0 t	120	01/07 →	**FCP1520**	ATE	Not for Rims 17 inch			
2.0 t	120	01/07 →				**FCP1931**	ATE	Until 12/08
2.0 t	147	02/09 →	**FCP1706**	ATE	For Rims 17 inch			
2.0 t	147	02/09 →	**FCP1520**	ATE	Not for Rims 17 inch			
2.0 t	147	02/09 → 07/12	**FCP1520**	ATE				
2.0 t	147	02/09 →				**FCP1931**	ATE	
2.0 t	177	05/09 →	**FCP1706**	ATE	For Rims 17 inch			
2.0 t	177	05/09 →	**FCP1520**	ATE	Not for Rims 17 inch			
2.0 t	177	05/09 →				**FCP1931**	ATE	
2.0 t	185	04/04 → 08/07	**FCP1520**	ATE				
2.0 t BioPower	110	01/07 → 07/12	**FCP1520**	ATE				
2.0 t BioPower	120	01/07 →	**FCP1706**	ATE	For Rims 17 inch			
2.0 t BioPower	120	01/07 →	**FCP1520**	ATE	Not for Rims 17 inch			
2.0 t BioPower	120	01/07 →				**FCP1931**	ATE	Until 12/08
2.0 t BioPower	129	01/07 →	**FCP1706**	ATE	For Rims 17 inch			
2.0 t BioPower	129	01/07 →	**FCP1520**	ATE	Not for Rims 17 inch			
2.0 t BioPower	129	01/07 →				**FCP1931**	ATE	
2.0 t BioPower	145	06/07 →	**FCP1706**	ATE	For Rims 17 inch			
2.0 t BioPower	145	06/07 →	**FCP1520**	ATE				
2.0 t BioPower	145	06/07 →				**FCP1931**	ATE	Until 12/08
2.0 t BioPower	147	05/09 →	**FCP1706**	ATE	For Rims 17 inch			
2.0 t BioPower	147	05/09 →	**FCP1520**	ATE				
2.0 t BioPower	147	05/09 →	**FCP1520**	ATE	Not for Rims 17 inch			
2.0 t BioPower	147	05/09 →				**FCP1931**	ATE	
2.0 t BioPower	154	09/02 →	**FCP1706**	ATE	For Rims 17 inch			
2.0 t BioPower	154	09/02 →	**FCP1520**	ATE	Not for Rims 17 inch			
2.0 t BioPower	154	09/02 →				**FCP1931**	ATE	Until 12/08
2.0 t BioPower XWD	120	01/08 →	**FCP1706**	ATE	For Rims 17 inch			
2.0 t BioPower XWD	120	01/08 →	**FCP1520**	ATE				
2.0 t BioPower XWD	120	01/08 →				**FCP1931**	ATE	
2.0 t BioPower XWD	154	01/08 →	**FCP1706**	ATE	For Rims 17 inch			
2.0 t BioPower XWD	154	01/08 →	**FCP1520**	ATE	Not for Rims 17 inch			
2.0 t BioPower XWD	154	01/08 →				**FCP1931**	ATE	Until 12/08
2.0 t BioPower XWD	162	01/08 →	**FCP1706**	ATE	For Rims 17 inch			
2.0 t BioPower XWD	162	01/08 →	**FCP1520**	ATE	Not for Rims 17 inch			
2.0 t BioPower XWD	162	01/08 →				**FCP1931**	ATE	
2.0 t XWD	120	01/07 →	**FCP1706**	ATE	For Rims 17 inch			
2.0 t XWD	120	01/07 →	**FCP1520**	ATE				
2.0 t XWD	120	01/07 →				**FCP1931**	ATE	Until 12/08
2.0 t XWD	162	01/08 →	**FCP1706**	ATE	For Rims 17 inch			
2.0 t XWD	162	01/08 →	**FCP1520**	ATE	Not for Rims 17 inch			
2.0 t XWD	162	01/08 →				**FCP1931**	ATE	
2.0 Turbo XWD	154	01/08 →	**FCP1706**	ATE	For Rims 17 inch			
2.0 Turbo XWD	154	01/08 →	**FCP1520**	ATE	Not for Rims 17 inch			
2.0 Turbo XWD	154	01/08 →				**FCP1931**	ATE	
2.8 Turbo V6	169	03/05 →	**FCP1706**	ATE	For Rims 17 inch			
2.8 Turbo V6	169	03/05 →	**FCP1520**	ATE	Not for Rims 17 inch			
2.8 Turbo V6	169	03/05 →				**FCP1931**	ATE	Until 12/08
2.8 Turbo V6	184	06/05 → 07/12	**FCP1520**	ATE				
2.8 Turbo V6	188	12/07 →	**FCP1706**	ATE	For Rims 17 inch			
2.8 Turbo V6	188	12/07 →	**FCP1520**	ATE	Not for Rims 17 inch			
2.8 Turbo V6	188	12/07 →				**FCP1931**	ATE	Until 12/08
2.8 Turbo V6	203	04/08 →	**FCP1706**	ATE				
2.8 Turbo V6	203	04/08 →				**FCP1931**	ATE	Until 12/08
2.8 Turbo V6 XWD	206	05/08 →	**FCP1706**	ATE				
2.8 Turbo V6 XWD	206	05/08 →				**FCP1931**	ATE	Until 12/08

For material availability see page 16-18 / Per la disponibilità materiali vedere a pagina 16-18

FERODO RACING
Updated on November 2020

...SAAB

9-3 Convertible (YS3F)

	kW				NOTE			NOTE
1.8t BioPower	110	01/07 →	FCP1706	ATE	For Rims 17 inch			
1.8t BioPower	110	01/07 →				FCP1931	ATE	Until 12/08
1.8t BioPower	129	01/07 →	FCP1706	ATE	For Rims 17 inch			
1.8t BioPower	129	01/07 →				FCP1931	ATE	Until 12/08
1.9 TDi	110	02/06 → 07/12	FCP1520	ATE				
1.9 TTiD	118	12/07 →	FCP1706	ATE	For Rims 17 inch			
1.9 TTiD	118	12/07 →	FCP1520	ATE	Not for Rims 17 inch			
1.9 TTiD	118	12/07 →				FCP1931	ATE	
1.9 TTiD	132	12/07 →	FCP1706	ATE	For Rims 17 inch			
1.9 TTiD	132	12/07 →	FCP1520	ATE	Not for Rims 17 inch			
1.9 TTiD	132	12/07 →				FCP1931	ATE	Until 12/08
1.9 TTiD	96	12/07 →	FCP1706	ATE	For Rims 17 inch			
1.9 TTiD	96	12/07 →	FCP1520	ATE	Not for Rims 17 inch			
1.9 TTiD	96	12/07 →				FCP1931	ATE	Until 12/08
2.0	129	08/03 → 07/12	FCP1520	ATE				
2.0	143	04/06 → 09/07	FCP1520	ATE				
2.0 t	120	01/11 →	FCP1706	ATE	For Rims 17 inch			
2.0 t	120	01/11 →	FCP1520	ATE	Not for Rims 17 inch			
2.0 t	120	01/11 →				FCP1931	ATE	
2.0 t	154	07/03 → 07/12	FCP1520	ATE				
2.0 t	162	01/11 →	FCP1706	ATE	For Rims 17 inch			
2.0 t	162	01/11 →	FCP1520	ATE	Not for Rims 17 inch			
2.0 t	162	01/11 →				FCP1931	ATE	
2.0 t	185	04/04 → 08/07	FCP1520	ATE				
2.0 t BioPower	120	01/11 →	FCP1706	ATE	For Rims 17 inch			
2.0 t BioPower	120	01/11 →	FCP1520	ATE	Not for Rims 17 inch			
2.0 t BioPower	120	01/11 →				FCP1931	ATE	
2.0 t BioPower	129	01/07 →	FCP1706	ATE	For Rims 17 inch			
2.0 t BioPower	129	01/07 →	FCP1520	ATE	Not for Rims 17 inch			
2.0 t BioPower	129	01/07 → 07/12	FCP1520	ATE				
2.0 t BioPower	129	01/07 →				FCP1931	ATE	Until 12/08
2.0 t BioPower	147	06/07 →	FCP1706	ATE	For Rims 17 inch			
2.0 t BioPower	147	06/07 →	FCP1520	ATE	Not for Rims 17 inch			
2.0 t BioPower	147	06/07 →				FCP1931	ATE	Until 12/08
2.0 t BioPower	162	01/11 →	FCP1706	ATE	For Rims 17 inch			
2.0 t BioPower	162	01/11 →	FCP1520	ATE	Not for Rims 17 inch			
2.0 t BioPower	162	01/11 →				FCP1931	ATE	
2.8 Turbo V6	169	02/06 →	FCP1706	ATE	For Rims 17 inch			
2.8 Turbo V6	169	02/06 →	FCP1520	ATE	Not for Rims 17 inch			
2.8 Turbo V6	169	02/06 →				FCP1931	ATE	Until 12/08
2.8 Turbo V6	184	06/05 → 07/12	FCP1520	ATE				
2.8 Turbo V6	188	12/07 →	FCP1706	ATE	For Rims 17 inch			
2.8 Turbo V6	188	12/07 →	FCP1520	ATE	Not for Rims 17 inch			
2.8 Turbo V6	188	12/07 →				FCP1931	ATE	Until 12/08
2.8 Turbo V6	203	02/09 →	FCP1706	ATE				
2.8 Turbo V6	203	02/09 →				FCP1931	ATE	
2.8 Turbo V6	206	02/09 →	FCP1706	ATE				
2.8 Turbo V6	206	02/09 →				FCP1931	ATE	

9-3 Estate

1.8	90	03/05 → 03/09	FCP1520	ATE				
1.8 t	110	03/05 →	FCP1706	ATE	For Rims 17 inch			
1.8 t	110	03/05 →				FCP1931	ATE	Until 12/08
1.8 t BioPower	110	01/07 →	FCP1706	ATE	For Rims 17 inch			
1.8 t BioPower	110	01/07 →				FCP1931	ATE	Until 12/08
1.9 TDi	110	02/05 → 07/12	FCP1520	ATE				
1.9 TDi	88	02/05 → 07/12	FCP1520	ATE				
1.9 TTiD	118	12/07 →	FCP1706	ATE	For Rims 17 inch			
1.9 TTiD	118	12/07 →	FCP1520	ATE	Not for Rims 17 inch			
1.9 TTiD	118	12/07 →				FCP1931	ATE	
1.9 TTiD	132	12/07 →	FCP1706	ATE	For Rims 17 inch			
1.9 TTiD	132	12/07 →	FCP1520	ATE	Not for Rims 17 inch			
1.9 TTiD	132	12/07 →				FCP1931	ATE	Until 12/08
1.9 TTiD	96	12/07 →	FCP1706	ATE	For Rims 17 inch			
1.9 TTiD	96	12/07 →	FCP1520	ATE	Not for Rims 17 inch			
1.9 TTiD	96	12/07 →				FCP1931	ATE	
2.0	110	03/05 → 07/12	FCP1520	ATE				
2.0	143	04/06 → 09/07	FCP1520	ATE				
2.0 t	120	01/07 →	FCP1706	ATE	For Rims 17 inch			
2.0 t	120	01/07 →	FCP1520	ATE	Not for Rims 17 inch			
2.0 t	120	01/07 →				FCP1931	ATE	Until 12/08
2.0 t	129	02/05 → 07/12	FCP1520	ATE				
2.0 t	154	03/05 → 07/12	FCP1520	ATE				
2.0 t	177	05/09 → 07/12	FCP1520	ATE				
2.0 t BioPower	129	01/07 →	FCP1706	ATE	For Rims 17 inch			
2.0 t BioPower	129	01/07 →	FCP1520	ATE	Not for Rims 17 inch			
2.0 t BioPower	129	01/07 → 07/12	FCP1520	ATE				

For material availability see page 16-18 / Per la disponibilità materiali vedere a pagina 16-18

...SAAB

	kW				NOTE			NOTE
...9-3 Estate								
2.0 t BioPower	129	01/07 →				FCP1931	ATE	Until 12/08
2.0 t BioPower	145	06/07 →	FCP1706	ATE	For Rims 17 inch			
2.0 t BioPower	145	06/07 →	FCP1520	ATE	Not for Rims 17 inch			
2.0 t BioPower	145	06/07 →				FCP1931	ATE	Until 12/08
2.0 t BioPower	147	02/09 →	FCP1706	ATE	For Rims 17 inch			
2.0 t BioPower	147	02/09 →	FCP1520	ATE	Not for Rims 17 inch			
2.0 t BioPower	147	02/09 →				FCP1931	ATE	
2.0 t BioPower	162	01/11 → 07/12	FCP1520	ATE				
2.0 t BioPower XWD	120	01/11 →	FCP1706	ATE	For Rims 17 inch			
2.0 t BioPower XWD	120	01/11 →	FCP1520	ATE	Not for Rims 17 inch			
2.0 t BioPower XWD	120	01/11 →				FCP1931	ATE	
2.0 t BioPower XWD	154	06/08 →	FCP1706	ATE	For Rims 17 inch			
2.0 t BioPower XWD	154	06/08 →	FCP1520	ATE	Not for Rims 17 inch			
2.0 t BioPower XWD	154	06/08 →				FCP1931	ATE	Until 12/08
2.0 t XWD	120	01/07 →	FCP1706	ATE	For Rims 17 inch			
2.0 t XWD	120	01/07 →	FCP1520	ATE	Not for Rims 17 inch			
2.0 t XWD	120	01/07 →				FCP1931	ATE	
2.0 t XWD	154	06/08 →	FCP1706	ATE	For Rims 17 inch			
2.0 t XWD	154	06/08 →	FCP1520	ATE	Not for Rims 17 inch			
2.0 t XWD	154	06/08 →				FCP1931	ATE	
2.0 t XWD	162	01/11 →	FCP1706	ATE	For Rims 17 inch			
2.0 t XWD	162	01/11 →	FCP1520	ATE	Not for Rims 17 inch			
2.0 t XWD	162	01/11 →				FCP1931	ATE	
2.8 Turbo V6	169	03/05 →	FCP1706	ATE	For Rims 17 inch			
2.8 Turbo V6	169	03/05 →	FCP1520	ATE	Not for Rims 17 inch			
2.8 Turbo V6	169	03/05 →				FCP1931	ATE	Until 12/08
2.8 Turbo V6	184	06/05 → 07/12	FCP1520	ATE				
2.8 Turbo V6	188	12/07 →	FCP1706	ATE	For Rims 17 inch			
2.8 Turbo V6	188	12/07 →	FCP1520	ATE	Not for Rims 17 inch			
2.8 Turbo V6	188	12/07 →				FCP1931	ATE	Until 12/08
2.8 Turbo V6	203	05/08 →	FCP1706	ATE				
2.8 Turbo V6	203	05/08 →				FCP1931	ATE	Until 12/08
2.8 Turbo V6 XWD	206	05/08 →	FCP1706	ATE				
2.8 Turbo V6 XWD	206	05/08 →				FCP1931	ATE	Until 12/08
9-3 Sport (D45/D49)								
2.0	110	09/02 → 07/12	FCP1520	ATE				
2.0	110	09/02 → 07/12				FCP1540	ATE	
2.0 Turbo	129	06/02 → 07/12	FCP1520	ATE				
2.0 Turbo	129	06/02 → 07/12				FCP1540	ATE	
2.2 TiD	92	06/02 → 10/04	FCP1520	ATE				
2.2 TiD	92	06/02 → 10/04				FCP1540	ATE	
9-3 Sport (D46/D49)								
2.0 Turbo	154	09/02 → 07/12	FCP1520	ATE				
2.0 Turbo	154	09/02 → 07/12				FCP1540	ATE	
9-3X								
1.9 TTiD	132	02/09 →	FCP1706	ATE	For Rims 17 inch			
1.9 TTiD	132	02/09 →	FCP1520	ATE	Not for Rims 17 inch			
1.9 TTiD	132	02/09 →				FCP1931	ATE	
2.0 t BioPower	162	01/11 →	FCP1706	ATE	For Rims 17 inch			
2.0 t BioPower	162	01/11 →	FCP1520	ATE	Not for Rims 17 inch			
2.0 t BioPower	162	01/11 → 07/12	FCP1520	ATE				
2.0 t BioPower	162	01/11 →				FCP1931	ATE	
2.0 t BioPower XWD	154	02/09 →	FCP1706	ATE	For Rims 17 inch			
2.0 t BioPower XWD	154	02/09 →	FCP1520	ATE	Not for Rims 17 inch			
2.0 t BioPower XWD	154	02/09 →				FCP1931	ATE	
2.0 t XWD	154	02/09 →	FCP1706	ATE	For Rims 17 inch			
2.0 t XWD	154	02/09 →	FCP1520	ATE	Not for Rims 17 inch			
2.0 t XWD	154	02/09 →				FCP1931	ATE	
9-5 (YS3E)								
2.0 t	110	09/97 →	FCP1068	ATE				
2.3 t	125	09/97 →	FCP1068	ATE				
3.0 V6t	147	01/98 →	FCP1068	ATE				
90								
2.0 i L	73	09/84 → 12/87				FCP3	ATE	
900								
2.0	74	10/78 → 12/80				FCP3	ATE	
2.0	74	10/80 → 08/87				FCP3	ATE	
2.0 16V	98, 136	09/93 → 07/96	FCP685	ATE				
2.0 16V	98, 136	09/93 → 07/96				FCP586	ATE	
2.3 16V	110	09/93 → 07/96	FCP685	ATE				

For material availability see page 16-18 / Per la disponibilità materiali vedere a pagina 16-18

	kW				NOTE			NOTE
...SAAB								
...900								
2.3 16V	110	09/93 → 07/96				FCP586	ATE	
2.3 16V	110	08/96 → 05/98	FCP1068	ATE				
2.5 24V	125	08/96 → 05/98	FCP1068	ATE				
2.5 V6 24V	125	09/93 → 07/96	FCP685	ATE				
2.5 V6 24V	125	09/93 → 07/96				FCP586	ATE	
900 II								
2.0 -16 Turbo	136	07/93 → 02/98	FCP1068	ATE				
2.0 i	96	08/94 → 02/98	FCP1068	ATE				
900 II Convertible								
2.0 -16 Turbo	136	12/93 → 02/98	FCP1068	ATE				
2.0 i	96	12/93 → 02/98	FCP1068	ATE				
900 II Coupe								
2.0 -16 Turbo	136	12/93 → 02/98	FCP1068	ATE				
2.0 i	96	08/94 → 02/98	FCP1068	ATE				
2.0 i	98	12/93 → 07/94	FCP1068	ATE				
9000								
2.0 -16	94	01/89 → 01/93	FCP660	LUCAS/TRW	ABS			
2.0 -16 CD	96	09/93 → 12/98	FCP660	LUCAS/TRW	ABS			
2.0 -16 Turbo	118	05/88 → 08/93	FCP660	LUCAS/TRW	ABS			
2.0 -16 Turbo CD	136	09/89 → 12/98	FCP660	LUCAS/TRW				
9000 Hatchback								
2.0 -16	94	12/85 → 08/88	FCP660	LUCAS/TRW	ABS			
2.0 -16 CS	94	01/89 → 12/98	FCP660	LUCAS/TRW	ABS			
2.0 -16 CS	96	09/93 → 12/98	FCP660	LUCAS/TRW	ABS			
2.0 -16 Turbo	118	09/84 → 08/93	FCP660	LUCAS/TRW	ABS			
99								
2.0	69	01/69 → 09/74	FCP2	ATE				
2.0	69	01/69 → 09/74				FCP3	ATE	
2.0 EMS	87	09/74 → 12/78				FCP3	ATE	
2.0 GL	74	09/74 → 12/84				FCP3	ATE	
99 Combi Coupe								
2.0	74	09/74 → 12/79				FCP3	ATE	
2.0 i	87	01/81 → 12/84				FCP3	ATE	
2.0 Turbo	107	10/77 → 06/80				FCP3	ATE	
SAO								
Penza								
1.3	50, 55	01/91 → 12/94	FCP487	SUMITOMO				
SCION								
FR-S								
2.0 L	147	03/12 →	FCP1639	SUMITOMO				
2.0 L	147	03/12 →				FCP4187	SUMITOMO	
SEAR								
Leon (5F1)								
2.0 Cupra	213	10/15 →	FCP1334	BREMBO	370mm discs			
2.0 Cupra	213	10/15 →	FCP4425	BREMBO	340mm discs			
2.0 Cupra	213	10/15 →				FCP1636		310mm discs

For material availability see page 16-18 / Per la disponibilità materiali vedere a pagina 16-18

	kW				NOTE			NOTE
SEAT								
124								
		01/68 → 12/83	FCP29	BENDIX				
1.6	70	09/76 → 10/80				FCP22	BENDIX	
1.6	72	09/75 → 08/76				FCP22	BENDIX	
1.8	87	09/75 → 10/80				FCP22	BENDIX	
1430	55	01/70 → 12/76				FCP22	BENDIX	
2.0	85	04/79 → 10/80				FCP22	BENDIX	
All i		01/68 → 12/83	FCP29	BENDIX				
D1200	44	01/68 → 12/76				FCP22	BENDIX	
LS1200	48	01/68 → 10/80				FCP22	BENDIX	
124 Estate								
LS1200	48	01/70 → 12/76				FCP22	BENDIX	
127								
0.9 Not C, CL	36	01/71 → 12/82	FCP29	BENDIX				
1.0	39	01/71 → 12/86	FCP29	BENDIX				
1.0 i		01/83 → 12/86	FCP29	BENDIX				
128								
		01/72 → 12/85	FCP29	BENDIX				
All i		01/72 → 12/85	FCP29	BENDIX				
131								
1.4	55	01/75 → 12/85	FCP29	BENDIX				
1.6	72	01/75 → 12/85	FCP29	BENDIX				
1.8 CLX		01/75 → 12/85	FCP29	BENDIX				
2.0	83	01/75 → 12/85	FCP29	BENDIX				
2.4	54	01/75 → 12/85	FCP29	BENDIX				
132								
1.8		01/74 → 12/79	FCP29	BENDIX				
2.0		01/79 → 12/83	FCP29	BENDIX				
133								
0.8	25	01/74 → 12/82	FCP29	BENDIX				
1430								
		01/71 → 12/83	FCP29	BENDIX				
All i		01/71 → 12/83	FCP29	BENDIX				
850								
All i		01/75 → 12/79	FCP29	BENDIX				
Alhambra								
1.8 20V	110	11/95 → 04/00	FCP590	ATE				
1.8 20V	110	11/95 → 04/00				FCP541	LUCAS/TRW	
1.9 TDi		11/95 → 04/00	FCP590	ATE				
1.9 TDi		11/95 → 04/00				FCP541	LUCAS/TRW	
2.0	85	11/95 → 04/00	FCP590	ATE				
2.0	85	11/95 → 04/00				FCP541	LUCAS/TRW	
ALHAMBRA (710, 711)								
1.4 TSI	110	06/10 →	FCP4425	LUCAS/TRW	PR 1LX,1LW(314mm disc)			
1.4 TSI	110	06/10 →				FCP1636	LUCAS/TRW	
2.0 TDI	100	06/10 → 05/11	FCP4425	LUCAS/TRW	PR 1LX,1LW(314mm disc)			
2.0 TDI	100	06/10 → 05/11				FCP1636	LUCAS/TRW	
2.0 TDI	103	06/10 →	FCP4425	LUCAS/TRW	PR 1LX,1LW(314mm disc)			
2.0 TDI	103	06/10 →				FCP1636	LUCAS/TRW	
2.0 TDI	125	06/10 →	FCP4425	LUCAS/TRW	PR 1LX,1LW(314mm disc)			
2.0 TDI	125	06/10 →				FCP1636	LUCAS/TRW	
2.0 TDI	85	05/11 →	FCP4425	LUCAS/TRW	PR 1LX,1LW(314mm disc)			
2.0 TDI	85	05/11 →				FCP1636	LUCAS/TRW	
2.0 TDI 4Drive	103	05/11 →	FCP4425	LUCAS/TRW	PR 1LX,1LW(314mm disc)			
2.0 TDI 4Drive	103	05/11 →				FCP1636	LUCAS/TRW	
2.0 TSI	147	11/10 →	FCP4425	LUCAS/TRW	PR 1LX,1LW(314mm disc)			
2.0 TSI	147	11/10 →				FCP1636	LUCAS/TRW	
Altea								
1.6 i	75	06/04 →	FCP1094	ATE				
1.9 TDi	77	06/04 →	FCP1094	ATE				
2.0 FSi	110	06/04 →	FCP1641	ATE				
2.0 TDi	103	06/04 →	FCP1641	ATE				

For material availability see page 16-18 / Per la disponibilità materiali vedere a pagina 16-18

FERODO RACING
Updated on November 2020



kW

...SEAT

					NOTE			NOTE
Arosa (6H)								
1.4 i 16V	74	01/00 →	**FCP1312**	LUCAS/TRW				
ATECA (KH7)								
1.0 TSI	85	05/16 →	**FCP4433**	TRW	Disc Diam mm:312,For PR code:1ZA			
1.0 TSI	85	05/16 →				**FCP4434**	ATE	Disc Diam mm:272,For PR code:1KE
1.4 TSI	110	06/16 →	**FCP4433**	TRW	Disc Diam mm:312,For PR code:1ZA			
1.4 TSI	110	06/16 →				**FCP4434**	ATE	Disc Diam mm:272,For PR code:1KE
1.4 TSI 4Drive	110	06/16 →	**FCP4433**	TRW	Disc Diam mm:312,For PR code:1ZA			
1.4 TSI 4Drive	110	06/16 →				**FCP4434**	ATE	Disc Diam mm:272,For PR code:1KE
1.6 TDI	85	04/16 →	**FCP4433**	TRW	Disc Diam mm:312,For PR code:1ZA			
1.6 TDI	85	04/16 →				**FCP4434**	ATE	Disc Diam mm:272,For PR code:1KE
2.0 TDI	105	10/16 →	**FCP4433**	TRW				
2.0 TDI	105	10/16 →				**FCP4434**	ATE	
2.0 TDI	110	04/16 →	**FCP4433**	TRW	Disc Diam mm:312,For PR code:1ZA			
2.0 TDI	110	04/16 →				**FCP4434**	ATE	Disc Diam mm:272,For PR code:1KE
2.0 TDI	81	10/16 →	**FCP4433**	TRW				
2.0 TDI	81	10/16 →				**FCP4434**	ATE	
2.0 TDI 4Drive	110	04/16 →	**FCP4433**	TRW	Disc Diam mm:312,For PR code:1ZA			
2.0 TDI 4Drive	110	04/16 →				**FCP4434**	ATE	Disc Diam mm:272,For PR code:1KE
2.0 TDI 4Drive	140	06/16 →	**FCP4433**	TRW	Disc Diam mm:312,For PR code:1ZA			
2.0 TDI 4Drive	140	06/16 →				**FCP4434**	ATE	Disc Diam mm:272,For PR code:1KE
Cordoba								
1.0	37	01/93 →	**FCP385**	KELGATE				
1.3		01/93 →	**FCP385**	KELGATE				
1.4	44	01/93 → 05/96	**FCP385**	KELGATE				
1.4	44	01/93 → 05/96	**FCP419**	KELGATE				
1.6	55	01/93 → 05/95	**FCP419**	KELGATE				
1.6	55, 74	06/95 → 06/99	**FCP419**	KELGATE				
1.8	66	06/95 → 06/99	**FCP419**	KELGATE				
1.8	66, 95	01/93 → 05/95	**FCP419**	KELGATE				
1.8 16V	95	01/94 → 06/99	**FCP774**	LUCAS/TRW	Vented			
1.8 16V	95	01/94 → 06/99				**FCP541**	LUCAS/TRW	
1.9 TDi	150	01/97 →	**FCP1312**	LUCAS/TRW				
1.9 TDi	150	01/97 →				**FCP541**	LUCAS/TRW	
1.9 TDi	55, 66	06/95 → 06/99	**FCP419**	KELGATE				
2.0 GT	85	01/93 →	**FCP774**	LUCAS/TRW				
2.0 GT	85	01/93 →				**FCP541**	LUCAS/TRW	
CORDOBA (6K1, 6K2)								
1.9 D	50	02/93 → 08/96	**FCP419**	KELGATE				
1.9 TD	55	02/93 → 08/96	**FCP419**	KELGATE				
Cordoba (I)								
1.4 i	44	06/94 → 06/99	**FCP385**	KELGATE				
1.4 i	44	06/94 → 06/99	**FCP419**	KELGATE				
1.6 i , Vario	55	02/93 → 06/99	**FCP419**	KELGATE				
1.6 i , Vario	74	07/96 → 06/99	**FCP1312**	LUCAS/TRW				
1.8 i	66	02/93 → 06/99	**FCP392**	KELGATE				
1.8 i	66	02/93 → 06/99	**FCP419**	KELGATE				
1.8 i 16V	95	01/94 → 08/96	**FCP774**	LUCAS/TRW				
1.8 i 16V	95	01/94 → 08/96	**FCP1312**	LUCAS/TRW				
1.8 i 16V	95	01/94 → 08/96				**FCP541**	LUCAS/TRW	
1.9 D, TD	50, 55	08/93 → 08/96	**FCP392**	KELGATE				
1.9 D, TD	50, 55	08/93 → 08/96	**FCP419**	KELGATE				
1.9 TDi , Vario	66, 81	08/96 → 06/99	**FCP1312**	LUCAS/TRW				
1.9 TDi , Vario	66, 81	08/96 → 06/99				**FCP541**	LUCAS/TRW	
2.0 i 16V	85	08/96 → 06/99	**FCP775**	LUCAS/TRW				
2.0 i GT	85	01/93 → 06/99	**FCP1312**	LUCAS/TRW				
2.0 i GT	85	01/93 → 06/99				**FCP541**	LUCAS/TRW	
Cordoba (I) Facelift (6K2)								
1.8 T 20V Cupra	115	07/00 → 10/08	**FCP1348**	BREMBO				
Cordoba (II)								
1.6 i , Vario	74	06/99 → 09/02	**FCP1312**	LUCAS/TRW				
1.9 TDi , Vario	66	06/99 → 09/02	**FCP1312**	LUCAS/TRW				
1.9 TDi , Vario	81	06/99 → 09/02	**FCP1312**	LUCAS/TRW				
Cordoba (III)								
1.2 i	47	10/02 →	**FCP1094**	ATE				
1.2 i 12V	51	05/06 →	**FCP1419**	LUCAS/TRW				
1.4 i 16V	55	09/02 → 12/07	**FCP1094**	ATE				
1.4 i 16V	55	09/02 → 12/07	**FCP1419**	LUCAS/TRW				
1.4 i 16V	55	10/02 →	**FCP1094**	ATE				
1.4 i 16V	63	05/06 →	**FCP1419**	LUCAS/TRW				

For material availability see page 16-18 / Per la disponibilità materiali vedere a pagina 16-18



kW

...SEAT					NOTE			NOTE
...Cordoba (III)								
1.4 i 16V	74	10/02 →	**FCP1419**	LUCAS/TRW				
1.4 TDi	51	05/05 →	**FCP1419**	LUCAS/TRW				
1.4 TDi	55	10/02 →	**FCP1094**	ATE				
1.4 TDi	55	10/02 → 12/05	**FCP1094**	ATE				
1.4 TDi	55	10/02 → 12/05	**FCP1419**	LUCAS/TRW				
1.4 TDi	59	06/05 →	**FCP1419**	LUCAS/TRW				
Cordoba Vario								
1.9 TDi		01/96 →	**FCP1312**	LUCAS/TRW				
1.9 TDi		01/96 →				**FCP541**	LUCAS/TRW	
EXEO (3R2)								
1.6	75	03/09 → 09/10	**FCP1717**	ATE	PR1LB,1LE(288mm disc)1LT,1LF(312mm disc)			
1.6	75	03/09 → 09/10				**FCP1491**	LUCAS/TRW	
1.6	75	03/09 → 09/10				**FCP1636**	LUCAS/TRW	
1.8 T	110	12/08 → 05/10	**FCP1717**	ATE	PR1LB,1LE(288mm disc)1LT,1LF(312mm disc)			
1.8 T	110	12/08 → 05/10				**FCP1491**	LUCAS/TRW	
1.8 T	110	12/08 → 05/10				**FCP1636**	LUCAS/TRW	
2.0 TDI	105	12/08 →	**FCP1717**	ATE	PR1LB,1LE(288mm disc)1LT,1LF(312mm disc)			
2.0 TDI	105	12/08 →				**FCP1491**	LUCAS/TRW	
2.0 TDI	105	12/08 →				**FCP1636**	LUCAS/TRW	
2.0 TDI	125	02/09 →	**FCP1717**	ATE	PR1LB,1LE(288mm disc)1LT,1LF(312mm disc)			
2.0 TDI	125	02/09 →				**FCP1491**	LUCAS/TRW	
2.0 TDI	125	02/09 →				**FCP1636**	LUCAS/TRW	
2.0 TDI	88	12/08 →	**FCP1717**	ATE	PR1LB,1LE(288mm disc)1LT,1LF(312mm disc)			
2.0 TDI	88	12/08 →				**FCP1491**	LUCAS/TRW	
2.0 TDI	88	12/08 →				**FCP1636**	LUCAS/TRW	
2.0 TFSI	147	03/09 →	**FCP1717**	ATE	PR1LB,1LE(288mm disc)1LT,1LF(312mm disc)			
2.0 TFSI	147	03/09 →				**FCP1491**	LUCAS/TRW	
2.0 TFSI	147	03/09 →				**FCP1636**	LUCAS/TRW	
EXEO ST (3R5)								
1.6	75	06/09 → 09/10	**FCP1717**	ATE	PR1LB,1LE(288mm disc)1LT,1LF(312mm disc)			
1.6	75	06/09 → 09/10				**FCP1491**	LUCAS/TRW	
1.6	75	06/09 → 09/10				**FCP1636**	LUCAS/TRW	
1.8 T	110	06/09 → 05/10	**FCP1717**	ATE	PR1LB,1LE(288mm disc)1LT,1LF(312mm disc)			
1.8 T	110	06/09 → 05/10				**FCP1491**	LUCAS/TRW	
1.8 T	110	06/09 → 05/10				**FCP1636**	LUCAS/TRW	
2.0 TDI	105	05/09 →	**FCP1717**	ATE	PR1LB,1LE(288mm disc)1LT,1LF(312mm disc)			
2.0 TDI	105	05/09 →				**FCP1491**	LUCAS/TRW	
2.0 TDI	105	05/09 →				**FCP1636**	LUCAS/TRW	
2.0 TDI	125	05/09 →	**FCP1717**	ATE	PR1LB,1LE(288mm disc)1LT,1LF(312mm disc)			
2.0 TDI	125	05/09 →				**FCP1491**	LUCAS/TRW	
2.0 TDI	125	05/09 →				**FCP1636**	LUCAS/TRW	
2.0 TDI	88	07/09 →	**FCP1717**	ATE	PR1LB,1LE(288mm disc)1LT,1LF(312mm disc)			
2.0 TDI	88	07/09 →				**FCP1491**	LUCAS/TRW	
2.0 TDI	88	07/09 →				**FCP1636**	LUCAS/TRW	
2.0 TFSI	147	06/09 →	**FCP1717**	ATE	PR1LB,1LE(288mm disc)1LT,1LF(312mm disc)			
2.0 TFSI	147	06/09 →				**FCP1491**	LUCAS/TRW	
2.0 TFSI	147	06/09 →				**FCP1636**	LUCAS/TRW	
Fura								
0.9	29	01/82 → 12/85	**FCP29**	BENDIX				
0.9	29	01/85 → 12/87	**FCP351**	BENDIX				
1.4	55	01/82 → 12/85	**FCP29**	BENDIX				
1.4	55	01/85 → 12/87	**FCP351**	BENDIX				
Ibiza								
0.9	29, 31	08/84 → 04/93	**FCP351**	BENDIX				
1.0	33, 37	05/93 →	**FCP385**	KELGATE				
1.2	45	08/84 → 04/93	**FCP351**	BENDIX				
1.2	46	08/84 → 04/93	**FCP351**	BENDIX				
1.2	52	08/84 → 04/93	**FCP351**	BENDIX				
1.3	40	05/93 →	**FCP385**	KELGATE				
1.4	44	06/94 →	**FCP385**	KELGATE				
1.6	55, 74	05/93 →	**FCP419**	KELGATE				
1.8	66	05/93 → 08/99	**FCP419**	KELGATE				
1.8	66	05/93 → 08/99				**FCP541**	LUCAS/TRW	
1.8 16V	95	05/93 → 08/99	**FCP774**	LUCAS/TRW				
1.8 16V	95	05/93 → 08/99				**FCP541**	LUCAS/TRW	
1.9 D	47, 48	05/93 → 08/99	**FCP419**	KELGATE	Solid			
1.9 D	47, 48	05/93 → 08/99	**FCP774**	LUCAS/TRW	Vented			
1.9 D	47, 48	05/93 → 08/99				**FCP541**	LUCAS/TRW	
1.9 TD	55	05/93 → 08/99	**FCP419**	KELGATE	Solid			
1.9 TD	55	05/93 → 08/99	**FCP774**	LUCAS/TRW	Vented			
1.9 TD	55	05/93 → 08/99				**FCP541**	LUCAS/TRW	

For material availability see page 16-18 / Per la disponibilità materiali vedere a pagina 16-18

...SEAT	kW				NOTE			NOTE
...Ibiza								
1.9 TDi	66	07/96 → 02/02				FCP541	LUCAS/TRW	
1.9 TDi	81	07/97 → 02/02	FCP1312	LUCAS/TRW				
1.9 TDi	81	07/97 → 02/02				FCP541	LUCAS/TRW	
1.9 TDi		01/05 →	FCP1094	ATE				
2.0 i GTi, Cupra 16V	110	05/93 → 12/96	FCP774	LUCAS/TRW				
2.0 i GTi, Cupra 16V	110	05/93 → 12/96				FCP541	LUCAS/TRW	
Ibiza (II)								
1.4 i	44	09/93 → 08/99	FCP385	KELGATE				
1.4 i	44	09/93 → 08/99	FCP419	KELGATE				
1.6 i	55	05/93 → 08/99	FCP419	KELGATE				
1.6 i	74	04/96 → 08/99	FCP1312	LUCAS/TRW				
1.8 i	66	05/93 → 08/99	FCP392	KELGATE				
1.8 i	66	05/93 → 08/99	FCP419	KELGATE				
1.8 i 16V	95	05/93 → 08/99	FCP774	LUCAS/TRW				
1.8 i 16V	95	05/93 → 08/99	FCP1312	LUCAS/TRW				
1.8 i 16V	95	05/93 → 08/99				FCP541	LUCAS/TRW	
1.9 D, TD	47	05/93 → 08/99	FCP392	KELGATE				
1.9 D, TD	47	05/93 → 08/99	FCP419	KELGATE				
1.9 D, TD	50	05/93 → 08/99	FCP392	KELGATE				
1.9 D, TD	50	05/93 → 08/99	FCP419	KELGATE				
1.9 D, TD	55	05/93 → 08/99	FCP392	KELGATE				
1.9 D, TD	55	05/93 → 08/99	FCP419	KELGATE				
1.9 TDi	66.81	08/96 → 08/99	FCP1312	LUCAS/TRW				
1.9 TDi	66.81	08/96 → 08/99				FCP541	LUCAS/TRW	
2.0 i	88	05/93 → 08/99	FCP774	LUCAS/TRW				
2.0 i	88	05/93 → 08/99	FCP1312	LUCAS/TRW				
2.0 i	88	05/93 → 08/99				FCP541	LUCAS/TRW	
2.0 i 16V	110	08/96 → 08/99	FCP775	LUCAS/TRW				
Ibiza (III)								
1.4 i 16V	74	08/99 → 02/02	FCP1312	LUCAS/TRW				
1.6 i	74	08/99 → 02/02	FCP1312	LUCAS/TRW				
1.9 TDi	66	08/99 → 02/02	FCP1312	LUCAS/TRW				
1.9 TDi	81	08/99 → 02/02	FCP1312	LUCAS/TRW				
IBIZA I (021A)								
1.5	63	11/84 → 05/93	FCP351	BENDIX				
1.5 i	65	10/86 → 05/93	FCP351	BENDIX				
1.5 i	74	10/86 → 05/93	FCP351	BENDIX				
1.5 i Cat	66	10/86 → 05/93	FCP351	BENDIX				
Ibiza IV (6L1)								
1.2 i	47	02/02 → 06/06	FCP1419	LUCAS/TRW				
1.2 i	47	02/02 → 06/06				FCP1491	LUCAS/TRW	
1.4 i 16V	55	02/02 → 12/07	FCP1419	LUCAS/TRW				
1.4 i 16V	55	02/02 → 12/07				FCP1491	LUCAS/TRW	
1.4 TDi	55	05/02 → 12/05	FCP1419	LUCAS/TRW				
1.4 TDi	55	05/02 → 12/05				FCP1491	LUCAS/TRW	
1.8 T Cupra R	132	01/04 → 02/08	FCP590	ATE				
1.8 T Cupra R	132	01/04 → 02/08	FRP3083	AP RACING				
1.8 T Cupra R	132	01/04 → 02/08				FCP1491	LUCAS/TRW	
1.8 T FR	110	12/03 → 05/08	FCP1419	LUCAS/TRW				
1.8 T FR	110	12/03 → 05/08				FCP1491	LUCAS/TRW	
1.9 SDi	47	02/02 → 12/05	FCP1419	LUCAS/TRW				
1.9 SDi	47	02/02 → 12/05				FCP1491	LUCAS/TRW	
1.9 TDi	96	02/02 → 09/11	FCP1419	LUCAS/TRW				
1.9 TDi	96	02/02 → 09/11				FCP1491	LUCAS/TRW	
1.9 TDI Cupra R	118	03/04 → 02/08	FCP590	ATE				
1.9 TDI Cupra R	118	03/04 → 02/08	FRP3083	AP RACING				
1.9 TDI Cupra R	118	03/04 → 02/08				FCP1491	LUCAS/TRW	
Ibiza V (KJ1)								
1.5 TSi	110	07/17 →	FCP1094	ATE	PR: 1ZG			
1.5 TSi	110	07/17 →				FCP1491	LUCAS/TRW	PR: 1KD,1KV
Ibiza V Sportcoupe (6J1)								
1.4 TSI Cupra	132	06/09 →	FCP1094	ATE	PR: 1LQ,1LR,1ZG			
1.4 TSI Cupra	132	06/09 →				FCP1491	LUCAS/TRW	PR: 1KK,1KT
Ibiza V Sportcoupe (6J1,6P1)								
1.2 TSI	77	09/10 →	FCP1094	ATE	PR 1LQ ,1LR			
1.2 TSI	77	09/10 →	FCP1419	LUCAS/TRW				
1.2 TSI	77	09/10 →				FCP1491	LUCAS/TRW	

For material availability see page 16-18 / Per la disponibilità materiali vedere a pagina 16-18

...SEAT	kW				NOTE			NOTE
Ibiza V Sportcoupe (6J1,6P5)								
1.8 TSI Cupra	141	11/15 →	**FCP1094**	ATE	For PR number 1ZG			
1.8 TSI Cupra	141	11/15 →	**FCP1641**	ATE	For PR Number 1ZC,1ZR,1ZS			
1.8 TSI Cupra	141	11/15 →				**FCP1491**	LUCAS/TRW	
Inca								
1.4	44	01/95 → 03/96	**FCP419**	KELGATE				
1.4	44	01/95 → 03/96	**FCP775**	LUCAS/TRW				
1.4	44	04/96 →	**FCP774**	LUCAS/TRW				
1.6	55	01/95 → 03/96	**FCP419**	KELGATE				
1.6	55	01/95 → 03/96	**FCP775**	LUCAS/TRW				
1.6	55	04/96 →	**FCP774**	LUCAS/TRW				
1.7	42	01/95 → 03/96	**FCP419**	KELGATE				
1.7	42	01/95 → 03/96	**FCP775**	LUCAS/TRW				
1.7	42	04/96 →	**FCP774**	LUCAS/TRW				
1.9 SDi	47	01/95 → 03/96	**FCP419**	KELGATE				
1.9 SDi	47	01/95 → 03/96	**FCP775**	LUCAS/TRW				
1.9 SDi	47	04/96 →	**FCP774**	LUCAS/TRW				
Leon (1M1)								
1.4 16V	55	11/99 →	**FCP1094**	ATE				
1.4 16V	55	11/99 →				**FCP1491**	LUCAS/TRW	
1.6	74	11/99 →	**FCP1094**	ATE				
1.6	74	11/99 →				**FCP1491**	LUCAS/TRW	
1.6	77	11/99 →	**FCP1094**	ATE				
1.6	77	11/99 →				**FCP1491**	LUCAS/TRW	
1.6 16V	77	09/00 →	**FCP1094**	ATE				
1.6 16V	77	09/00 →				**FCP1491**	LUCAS/TRW	
1.8 20V	92	11/99 →	**FCP1094**	BREMBO				
1.8 20V	92	11/99 →				**FCP1491**	LUCAS/TRW	
1.8 20V T, 1.8 20V T 4	132	11/99 →	**FCP590**	ATE				
1.8 20V T, 1.8 20V T 4	132	11/99 →				**FCP1491**	LUCAS/TRW	
1.8 T Cupra R	154	11/99 →	**FCP590**	ATE				
1.8 T Cupra R	154	11/99 →				**FCP1491**	LUCAS/TRW	
1.8T Cupra R	165	07/03 →	**FCP590**	ATE				
1.8T Cupra R	165	07/03 →	**FCP1348**	BREMBO				
1.8T Cupra R	165	07/03 →				**FCP1491**	LUCAS/TRW	
1.9 SDi	50	11/99 →	**FCP1094**	ATE				
1.9 SDi	50	11/99 →				**FCP1491**	LUCAS/TRW	
1.9 Tdi	110	02/01 →	**FCP590**	ATE				
1.9 Tdi	110	02/01 →				**FCP1491**	LUCAS/TRW	
1.9 TDi	66	11/99 →	**FCP1094**	ATE				
1.9 TDi	66	11/99 →				**FCP1491**	LUCAS/TRW	
1.9 TDi	74	10/05 →	**FCP1094**	ATE				
1.9 TDi	74	10/05 →				**FCP1491**	LUCAS/TRW	
1.9 TDi	81	11/99 →	**FCP1094**	ATE				
1.9 TDi	81	11/99 →				**FCP1491**	LUCAS/TRW	
1.9 TDi	96	05/03 →	**FCP590**	ATE	PR 1LE/1LN/1ZE			
1.9 TDi	96	05/03 →	**FCP1094**	ATE	PR 1LQ/1LR/1LS			
1.9 TDi	96	05/03 →				**FCP1491**	LUCAS/TRW	
1.9 TDi Syncro	110	02/01 →	**FCP1348**	BREMBO				
1.9 TDi Syncro	110	02/01 →				**FCP1491**	LUCAS/TRW	
2.8 Cupra 4	150	02/01 →	**FCP590**	ATE	Ch. Y000001 ->			
2.8 Cupra 4	150	02/01 →				**FCP1491**	LUCAS/TRW	
Leon (1P1)								
1.4 16V	55	09/05 →	**FCP1094**	ATE				
1.4 16V	55	09/05 →				**FCP1491**	LUCAS/TRW	
1.4 16V	63	09/05 →	**FCP1094**	ATE				
1.4 16V	63	09/05 →				**FCP1491**	LUCAS/TRW	
1.4 TSi	92	11/07 →	**FCP1094**	ATE	PR 1ZF, 1ZM			
1.4 TSi	92	11/07 →	**FCP1641**	ATE	PR 1LJ, 1ZE			
1.4 TSi	92	11/07 →				**FCP1491**	LUCAS/TRW	
1.6, 1.6 16V	75	09/05 →	**FCP1094**	ATE				
1.6, 1.6 16V	75	09/05 →				**FCP1491**	LUCAS/TRW	
1.6, 1.6 16V	77	09/05 →	**FCP1094**	ATE				
1.6, 1.6 16V	77	09/05 →				**FCP1491**	LUCAS/TRW	
1.8 T 20V	132	09/05 →	**FCP1641**	ATE				
1.8 T 20V	132	09/05 →				**FCP1491**	LUCAS/TRW	
1.8 T 20V	165	09/05 →	**FCP1348**	BREMBO				
1.8 T 20V	165	09/05 →				**FCP1491**	LUCAS/TRW	
1.8 TSi	118	06/07 →	**FCP1641**	ATE				
1.8 TSi	118	06/07 →				**FCP1491**	LUCAS/TRW	
1.9 TDi	66	09/05 →	**FCP1094**	ATE				
1.9 TDi	66	09/05 →				**FCP1491**	LUCAS/TRW	
1.9 TDi	77	09/05 →	**FCP1094**	ATE				
1.9 TDi	77	09/05 →				**FCP1491**	LUCAS/TRW	
2.0 Cupra R	195	09/09 →	**FCP1641**	ATE	PR Number 1IJ, 1ZA, 1ZE			

For material availability see page 16-18 / Per la disponibilità materiali vedere a pagina 16-18

FERODO RACING
Updated on November 2020

...SEAT	kW				NOTE			NOTE
...LEON (1P1)								
2.0 Cupra R	195	09/09 →	FCP1765	ATE	PR Number: 1LT, 1LU			
2.0 Cupra R	195	09/09 → 12/12	FCP4223	ATE				
2.0 Cupra R	195	09/09 →				FCP1491	LUCAS/TRW	PR Number: 1KD
2.0 Cupra R	195	09/09 →				FCP4316	BOSCH	PR Numbers: 1KS
2.0 Cupra R	195	09/09 → 12/12				FCP1636	LUCAS/TRW	Disc Diam mm:286,For PR code:1KZ/1KY
2.0 FSi	110	09/05 →	FCP1641	ATE				
2.0 FSi	110	09/05 →				FCP1491	LUCAS/TRW	
2.0 FSi 16v	110	07/05 → 05/10	FCP1641	ATE	PR 1ZA, 1LJ,1ZE			
2.0 FSi 16v	110	07/05 → 05/10				FCP4316	BOSCH	
2.0 TDi	100	09/05 →	FCP1641	ATE				
2.0 TDi	100	09/05 →				FCP1491	LUCAS/TRW	
2.0 TDi	103	09/05 →	FCP1641	ATE				
2.0 TDi	103	09/05 →				FCP1491	LUCAS/TRW	
2.0 TDi	125	02/06 →	FCP1641	ATE				
2.0 TDi	125	02/06 →				FCP1491	LUCAS/TRW	
2.0 TDi 16v	125	05/06 → 10/10	FCP1641	ATE	PR 1LJ/1ZA, 1ZE			
2.0 TDi 16v	125	05/06 → 10/10				FCP4316	BOSCH	
2.0 TFSI	177	11/06 → 05/11	FCP1765	ATE	Disc Diam mm:345,For PR code:1LU			
2.0 TFSI	177	11/06 → 05/11	FCP4223	ATE				
2.0 TFSI	177	11/06 → 05/11				FCP1636	LUCAS/TRW	Disc Diam mm:286,For PR code:1KZ/1KY
2.0 TFSi	136	09/05 →	FCP1765	ATE				
2.0 TFSi	136	09/05 →				FCP1491	LUCAS/TRW	
2.0 TFSi	147	09/05 →	FCP1765	ATE				
2.0 TFSi	147	09/05 →				FCP1491	LUCAS/TRW	
2.0 TFSI	177	11/06 →	FCP1765	ATE				
2.0 TFSI	177	11/06 →				FCP1491	LUCAS/TRW	
2.0 TFSi 16v	136	10/05 → 05/06	FCP1641	ATE	PR 1LJ/1ZA, 1ZE			
2.0 TFSi 16v	136	10/05 → 05/06	FCP1765	ATE	PR 1LU			
2.0 TFSi 16v	136	10/05 → 05/06				FCP4316	BOSCH	
2.0 TSFI	136	09/05 →	FCP1641	ATE				
2.0 TSFI	136	09/05 →				FCP1491	LUCAS/TRW	
2.0 TSFI	147	09/05 →	FCP1641	ATE				
2.0 TSFI	147	09/05 →				FCP1491	LUCAS/TRW	
2.0 TSi 16v	147	05/05 → 03/09	FCP1641	ATE	PR 1LJ, 1ZE			
2.0 TSi 16v	147	05/05 → 03/09	FCP1765	ATE	PR 1LU			
2.0 TSi 16v	147	05/05 → 03/09				FCP4316	BOSCH	
LEON (5F1)								
1.0 TSI	85	05/15 →				FCP4434	ATE	
1.2 TSI	63	01/13 →	FCP4433	LUCAS/TRW				
1.2 TSI	77	01/13 →	FCP4433	LUCAS/TRW				
1.4 TSI	103	09/12 →	FCP4433	LUCAS/TRW				
1.4 TSI	110	05/14 →	FCP4433	TRW	Disc Diam mm:288,For PR code:1ZE			
1.4 TSI	110	05/14 →				FCP4434	ATE	
1.4 TSI	90	11/12 →	FCP4433	LUCAS/TRW				
1.6 TDI	66	11/12 →	FCP4433	LUCAS/TRW				
1.6 TDI	77	11/12 →	FCP4433	LUCAS/TRW				
1.6 TDI	85	11/16 →	FCP4433	TRW	Disc Diam mm:288,For PR code:1ZE			
1.6 TDI	85	11/16 →				FCP4434	ATE	Disc Diam mm:272,For PR code:1KE
1.8 TSI	132	02/13 →	FCP4433	LUCAS/TRW				
2.0 Cupra	206	10/13 →	FCP4425	LUCAS/TRW	PR 1LJ			
2.0 Cupra	206	10/13 →				FCP1636	LUCAS/TRW	PR 1KW
2.0 TDI	105	05/13 →	FCP4433	TRW	Disc Diam mm:288,For PR code:1ZE			
2.0 TDI	105	05/13 →				FCP4434	ATE	
2.0 TDI	110	10/12 →	FCP4433	LUCAS/TRW				
2.0 TDI	110	10/12 →				FCP4434	ATE	
2.0 TDI	135	09/12 →	FCP4433	LUCAS/TRW				
2.0 TDI	135	09/12 →				FCP4434	ATE	
2.0 TDI	81	05/13 →	FCP4433	TRW	Disc Diam mm:288,For PR code:1ZE			
2.0 TDI	81	05/13 →				FCP4434	ATE	
Leon (MK1)								
2.0 SuperCopa		01/99 → 12/05	FRP3084	AP RACING				
2.0 SuperCopa		01/99 → 12/05				FCP541	AP RACING	
Leon (MK2)								
2.0 SuperCopa	220	01/05 → 12/12	FRP3084	AP RACING				
2.0 SuperCopa	220	01/05 → 12/12				FCP825	AP RACING	
2.0 SuperCopa Long race	220	01/05 → 12/12	FRP3014	AP RACING				
2.0 SuperCopa Long race	220	01/05 → 12/12				FCP825	AP RACING	
Leon (MK3)								
2.0 SuperCopa		01/12 →	FRP3014	AP RACING				
2.0 SuperCopa		12/12 →				FCP825	AP RACING	

For material availability see page 16-18 / Per la disponibilità materiali vedere a pagina 16-18

	kW				NOTE			NOTE
...SEAT								
LEON SC (5F5)								
1.0 TSI	85	05/15 →				FCP4434	ATE	
1.4 TSI	110	05/14 →	FCP4433	TRW	Disc Diam mm:288,For PR code:1ZE			
1.4 TSI	110	05/14 →				FCP4434	ATE	
1.6 TDI	85	11/16 →	FCP4433	TRW	Disc Diam mm:288,For PR code:1ZE			
1.6 TDI	85	11/16 →				FCP4434	ATE	Disc Diam mm:272,For PR code:1KE
1.8 TSI	132	02/13 →	FCP4433	LUCAS/TRW				
2.0 Cupra	206	10/13 →	FCP4425	LUCAS/TRW	PR 1LJ			
2.0 Cupra	206	10/13 →				FCP1636	LUCAS/TRW	PR 1KW
2.0 Cupra	213	10/15 →	FCP4425	LUCAS/TRW	PR 1LJ,1LG,1LD			
2.0 Cupra	213	10/15 →				FCP1636	LUCAS/TRW	PR 1KW, 1KF
2.0 TDI	105	05/13 →	FCP4433	TRW	Disc Diam mm:288,For PR code:1ZE			
2.0 TDI	105	05/13 →				FCP4434	ATE	
2.0 TDI	110	02/13 →	FCP4433	TRW	Disc Diam mm:288,For PR code:1ZE			
2.0 TDI	110	02/13 →				FCP4434	ATE	
2.0 TDI	135	03/13 →	FCP4433	TRW	Disc Diam mm:288,For PR code:1ZE			
2.0 TDI	135	03/13 →				FCP4434	ATE	
2.0 TDI	81	02/13 →	FCP4433	TRW	Disc Diam mm:288,For PR code:1ZE			
2.0 TDI	81	02/13 →				FCP4434	ATE	
LEON ST (5F8)								
1.0 TSI	85	05/15 →				FCP4434	ATE	
1.2 TSI	63	11/13 →	FCP4433	LUCAS/TRW	PR 1LJ			
1.2 TSI	63	11/13 →				FCP1491	LUCAS/TRW	PR Number 1KD
1.2 TSI	63	11/13 →				FCP1636	LUCAS/TRW	PR Number 1KS
1.2 TSI	77	08/13 →	FCP4433	LUCAS/TRW	PR 1LJ			
1.2 TSI	77	08/13 →				FCP1491	LUCAS/TRW	PR Number 1KD
1.2 TSI	77	08/13 →				FCP1636	LUCAS/TRW	PR Number 1KS
1.4 TGI	81	10/13 →	FCP4433	LUCAS/TRW	PR 1LJ			
1.4 TGI	81	10/13 →				FCP1491	LUCAS/TRW	PR Number 1KD
1.4 TGI	81	10/13 →				FCP1636	LUCAS/TRW	PR Number 1KS
1.4 TSI	103	10/13 →	FCP4433	LUCAS/TRW	PR 1 LJ			
1.4 TSI	103	10/13 →				FCP1491	LUCAS/TRW	PR Number 1KD
1.4 TSI	103	10/13 →				FCP1636	LUCAS/TRW	PR Number 1KS
1.4 TSI	110	05/14 →	FCP4433	TRW	Disc Diam mm:312,For PR code:1ZA			
1.4 TSI	110	05/14 →				FCP4434	ATE	
1.4 TSI	90	10/13 →	FCP4433	LUCAS/TRW	PR 1LJ			
1.4 TSI	90	10/13 →				FCP1491	LUCAS/TRW	PR Number 1KD
1.4 TSI	90	10/13 →				FCP1636	LUCAS/TRW	PR Number 1KS
1.6 TDI	66	11/13 →	FCP4433	LUCAS/TRW	PR 1LJ			
1.6 TDI	66	11/13 →				FCP1491	LUCAS/TRW	PR Number 1KD
1.6 TDI	66	11/13 →				FCP1636	LUCAS/TRW	PR Number 1KS
1.6 TDI	77	10/13 →	FCP4433	LUCAS/TRW	PR 1LJ			
1.6 TDI	77	10/13 →				FCP1491	LUCAS/TRW	PR Number 1KD
1.6 TDI	77	10/13 →				FCP1636	LUCAS/TRW	PR Number 1KS
1.6 TDI	81	09/13 →	FCP4433	LUCAS/TRW	PR 1LJ			
1.6 TDI	81	09/13 →				FCP1491	LUCAS/TRW	PR Number 1KD
1.6 TDI	81	09/13 →				FCP1636	LUCAS/TRW	PR Number 1KS
1.6 TDI	85	11/16 →	FCP4433	TRW	Disc Diam mm:288,For PR code:1ZE			
1.6 TDI	85	11/16 →				FCP4434	ATE	Disc Diam mm:272,For PR code:1KE
1.6 TDI 4Drive	77	04/14 →	FCP4433	LUCAS/TRW	PR 1LJ			
1.6 TDI 4Drive	77	04/14 →				FCP1491	LUCAS/TRW	PR Number 1KD
1.6 TDI 4Drive	77	04/14 →				FCP1636	LUCAS/TRW	PR Number 1KS
1.8 TFSI	132	10/13 →	FCP4433	LUCAS/TRW	PR 1LJ			
1.8 TFSI	132	10/13 →				FCP1491	LUCAS/TRW	PR Number 1KD
1.8 TFSI	132	10/13 →				FCP1636	LUCAS/TRW	PR Number 1KS
2.0 Cupra	206	10/13 →	FCP4433	LUCAS/TRW	PR 1LJ			
2.0 Cupra	206	10/13 →	FCP4433	LUCAS/TRW	PR 1LJ			
2.0 Cupra	206	10/13 →				FCP1636	LUCAS/TRW	PR 1KW,1KF
2.0 TDI	105	10/13 →	FCP4433	LUCAS/TRW	PR 1LJ			
2.0 TDI	105	10/13 →				FCP1491	LUCAS/TRW	PR Number 1KD
2.0 TDI	105	10/13 →				FCP1636	LUCAS/TRW	PR Number 1KS
2.0 TDI	105	10/13 →				FCP4434	ATE	
2.0 TDI	110	10/13 →	FCP4433	LUCAS/TRW	PR 1LJ			
2.0 TDI	110	10/13 →				FCP1491	LUCAS/TRW	PR Number 1KD
2.0 TDI	110	10/13 →				FCP1636	LUCAS/TRW	PR Number 1KS
2.0 TDI	110	10/13 →				FCP4434	ATE	
2.0 TDI	135	08/13 →	FCP4433	LUCAS/TRW	PR 1LJ			
2.0 TDI	135	08/13 →				FCP1491	LUCAS/TRW	PR Number 1KD
2.0 TDI	135	08/13 →				FCP1636	LUCAS/TRW	PR Number 1KS
2.0 TDI	135	08/13 →				FCP4434	ATE	
2.0 TDI	81	11/13 →	FCP4433	LUCAS/TRW	PR 1LJ			
2.0 TDI	81	11/13 →				FCP1491	LUCAS/TRW	PR Number 1KD
2.0 TDI	81	11/13 →				FCP1636	LUCAS/TRW	PR Number 1KS
2.0 TDI	81	11/13 →				FCP4434	ATE	
2.0 TDI 4Drive	135	11/14 →	FCP4433	TRW	For PR code:1ZE			
2.0 TDI 4Drive	135	11/14 →				FCP4434	ATE	

For material availability see page 16-18 / Per la disponibilità materiali vedere a pagina 16-18

FERODO RACING
Updated on November 2020

...SEAT					NOTE			NOTE
Malaga								
0.8	25	01/87 → 12/93	**FCP351**	BENDIX				
0.9	29, 30	01/87 →	**FCP351**	BENDIX				
1.2	45	05/85 → 04/91	**FCP351**	BENDIX				
1.2	46	05/85 → 04/91	**FCP351**	BENDIX				
1.2	52	05/85 → 04/91	**FCP351**	BENDIX				
1.5	64	05/85 → 04/91	**FCP351**	BENDIX				
1.5 i	73	01/87 → 04/91	**FCP351**	BENDIX				
1.7 D	41	01/87 → 04/91	**FCP351**	BENDIX				
Marbella								
0.8	25	11/86 → 09/89	**FCP351**	BENDIX				
0.9	29, 30	11/86 → 05/89	**FCP351**	BENDIX				
1.3	33	11/86 → 09/91	**FCP351**	BENDIX				
Panda								
0.9	31	01/79 → 12/82	**FCP29**	BENDIX				
Ritmo								
1.2	46	01/78 → 12/88	**FCP29**	BENDIX				
1.4	55	01/78 → 12/88	**FCP29**	BENDIX				
Ronda								
1.2	45, 46	06/82 → 12/87	**FCP351**	BENDIX				
1.4	54	06/82 → 11/88	**FCP351**	BENDIX				
1.5	66	08/83 → 12/87	**FCP351**	BENDIX				
1.6	68	06/82 → 12/87	**FCP351**	BENDIX				
1.7	41	06/82 → 12/87	**FCP351**	BENDIX				
Terra								
0.9	29	01/84 →	**FCP351**	BENDIX				
1.3	33	03/90 → 12/94	**FCP351**	BENDIX				
1.4	35	01/84 →	**FCP351**	BENDIX				
Toledo								
1.6	55	04/91 → 10/98	**FCP419**	KELGATE				
1.6	74	11/98 →	**FCP1289**	LUCAS/TRW				
1.6	74	11/98 →				**FCP541**	LUCAS/TRW	
1.8	66	04/91 → 10/98	**FCP419**	KELGATE				
1.8	92	11/98 →	**FCP1289**	LUCAS/TRW				
1.8	92	11/98 →				**FCP541**	LUCAS/TRW	
1.8 16V	95, 102	04/91 → 03/99	**FCP774**	LUCAS/TRW				
1.8 16V	95, 102	04/91 → 03/99				**FCP541**	LUCAS/TRW	
1.9 TD	55	01/91 →	**FCP419**	KELGATE				
1.9 TDi	66, 81	08/95 → 10/98	**FCP774**	LUCAS/TRW				
1.9 TDi	66, 81	08/95 → 10/98	**FCP775**	LUCAS/TRW				
1.9 TDi	66, 81	11/98 →	**FCP1289**	LUCAS/TRW				
1.9 TDi	66, 81	11/98 →				**FCP541**	LUCAS/TRW	
2.0	85	04/91 → 10/98	**FCP774**	LUCAS/TRW				
2.0	85	04/91 → 10/98				**FCP541**	LUCAS/TRW	
2.0 GT 16V	110	01/94 → 10/98	**FCP774**	LUCAS/TRW				
2.0 GT 16V	110	01/94 → 10/98				**FCP541**	LUCAS/TRW	
2.3 V5	110	11/98 →	**FCP590**	ATE				
2.3 V5	110	11/98 →				**FCP541**	LUCAS/TRW	
Toledo (I)								
1.6 i	55	04/91 → 03/99	**FCP419**	KELGATE				
1.8 i	66	04/91 → 12/96	**FCP419**	KELGATE				
1.8 i 16V	92, 98	05/91 → 03/99	**FCP1312**	LUCAS/TRW				
1.9 D, TD, SDi	47	05/91 → 03/99	**FCP419**	KELGATE				
1.9 D, TD, SDi	50	05/91 → 03/99	**FCP419**	KELGATE				
1.9 D, TD, SDi	55	05/91 → 03/99	**FCP419**	KELGATE				
1.9 TDi	66.81	08/95 → 03/99	**FCP774**	LUCAS/TRW				
1.9 TDi	66.81	08/95 → 03/99	**FCP775**	LUCAS/TRW				
1.9 TDi	66.81	08/95 → 03/99	**FCP1312**	LUCAS/TRW				
2.0 i	85	04/91 → 10/98	**FCP774**	LUCAS/TRW				
2.0 i	85	04/91 → 10/98	**FCP1312**	LUCAS/TRW				
2.0 i	85	04/91 → 10/98				**FCP541**	LUCAS/TRW	
Toledo (II)								
1.8 i		04/99 →	**FCP590**	ATE				
1.8 i		04/99 →				**FCP541**	LUCAS/TRW	
2.3 i V5		04/99 →	**FCP590**	ATE				
2.3 i V5		04/99 →				**FCP541**	LUCAS/TRW	

For material availability see page 16-18 / Per la disponibilità materiali vedere a pagina 16-18

	kW				NOTE			NOTE
...SEAT								
Toledo (III)								
1.6 i	75	12/04 →	**FCP1094**	ATE				
1.9 TDi	77	10/04 →	**FCP1641**	ATE				
1.9 TDi	77	12/04 →	**FCP1094**	ATE				
2.0 Tdi 16V	103	12/04 →	**FCP1641**	ATE				
2.0 Tdi 16V	103	12/04 →				**FCP1636**	LUCAS/TRW	
Toledo I (1L)								
1.9 D	50	05/91 → 03/99	**FCP419**	KELGATE				
1.9 TD	55	05/91 → 03/99	**FCP419**	KELGATE				
Toledo III (5P2)								
2.0 FSi	110	12/04 →	**FCP1641**	ATE				
2.0 FSi	110	12/04 →				**FCP1636**	LUCAS/TRW	
SINGER								
Gazelle								
		01/64 → 12/65	**FCP823**	LOCKHEED				
Vogue								
		01/61 → 12/67	**FCP823**	LOCKHEED				
SKODA								
130 (Estelle)								
1.3 Rapide Coupe	46	01/85 → 12/90	**FCP461**	ATE				
135 (Estelle)								
1.3		01/85 → 12/90	**FCP461**	ATE				
Fabia								
1.2	40	07/00 →	**FCP1094**	ATE				
1.4	50	10/99 → 07/03	**FCP1094**	ATE				
1.4 16V	55, 74	10/99 →	**FCP1094**	ATE				
1.4 16V	55, 74	10/99 →				**FCP541**	LUCAS/TRW	
1.4 TDi PD 16V	55	08/03 →	**FCP1094**	ATE				
1.9 SDi	47	01/00 →	**FCP1094**	ATE				
1.9 TDi	74	01/00 →	**FCP1094**	ATE				
1.9 TDi	74	01/00 →				**FCP541**	LUCAS/TRW	
1.9 TDi RS	96	07/03 →	**FCP1419**	LUCAS/TRW				
2.0 i	88	08/03 →	**FCP1419**	LUCAS/TRW				
2.0 i	88	08/03 →				**FCP1491**	LUCAS/TRW	
2.0 Saloon & SW Estate	85	08/00 →	**FCP1419**	LUCAS/TRW				
2.0 Saloon & SW Estate	85	08/00 →				**FCP541**	LUCAS/TRW	
R5 Rally	205	01/17 →	**FRP3140**	BREMBO				
R5 Rally	205	01/17 →				**FRP3140**	BREMBO	
Fabia III								
1.4 TSI R5 (NJ3)	92	02/18 →	**FCP1641**	ATE				
1.4 TSI R5 (NJ3)	92	02/18 →				**FCP1491**	LUCAS/TRW	For Pr number 1KT
Octavia								
1.4 EU4	55	08/00 → 05/04	**FCP1094**	ATE				
1.4 i	44	04/99 → 05/04	**FCP1094**	ATE				
1.4 i 16V	55	12/99 → 07/00	**FCP1094**	ATE				
1.4 TSi 16v (1Z3,1Z5)	90	11/08 →	**FCP1094**	ATE	PR 1ZM, ZF			
1.4 TSi 16v (1Z3,1Z5)	90	11/08 →				**FCP4316**	BOSCH	
1.6 8v (1Z3,1Z5)	75	05/04 →	**FCP1094**	ATE	PR 1ZM, 1ZF			
1.6 8v (1Z3,1Z5)	75	05/04 →				**FCP4316**	BOSCH	
1.6 EU4	75	08/00 → 05/04	**FCP1094**	ATE				
1.6 FSi 8v (1Z5)	75	09/04 →	**FCP1094**	ATE	PR 1ZM, 1ZF			
1.6 FSi 8v (1Z5)	75	09/04 →				**FCP4316**	BOSCH	
1.6 i	55	09/96 → 07/00	**FCP1094**	ATE				
1.6 i	74	02/97 → 05/04	**FCP1094**	ATE				
1.6 Multifuel 8v (1Z3,1Z5)	75	11/07 → 05/10	**FCP1094**	ATE	PR 1ZM, 1ZF			
1.6 Multifuel 8v (1Z3,1Z5)	75	11/07 → 05/10				**FCP4316**	BOSCH	
1.6 TDi 16v (1Z5)	77	06/09 →	**FCP1094**	ATE	PR 1ZM, 1ZF			
1.6 TDi 16v (1Z5)	77	06/09 →				**FCP4316**	BOSCH	
1.8 20V		10/96 → 04/99	**FCP1094**	ATE				
1.8 20V		10/96 → 04/99				**FCP541**	LUCAS/TRW	
1.8 FSi/TSi 16v (1Z3,1Z5)	118	06/07 →	**FCP1641**	ATE	PR 1ZE			
1.8 FSi/TSi 16v (1Z3,1Z5)	118	06/07 →				**FCP4316**	BOSCH	

For material availability see page 16-18 / Per la disponibilità materiali vedere a pagina 16-18

FERODO RACING
Updated on November 2020

...SKODA

...Octavia

	kW				NOTE			NOTE
1.8 TFSi 16v (1Z3,1Z5)	112	03/09 →	FCP1641	ATE	PR 1ZE			
1.8 TFSi 16v (1Z3,1Z5)	112	03/09 →				FCP4316	BOSCH	
1.8 TSi 16v (1Z5,1Z5)	118	11/08 →	FCP1641	ATE	PR 1ZE			
1.8 TSi 16v (1Z5,1Z5)	118	11/08 →				FCP4316	BOSCH	
1.8 Turbo 20V		01/97 → 07/00	FCP590	ATE				
1.8 Turbo 20V		01/97 → 07/00				FCP541	LUCAS/TRW	
1.8 Turbo EU3 (4x4), EU4 (RS) 20V	110	08/00 → 05/04	FCP590	ATE				
1.8 Turbo EU3 (4x4), EU4 (RS) 20V	110	08/00 → 05/04				FCP541	LUCAS/TRW	
1.9 SDi EU3		10/96 → 07/00	FCP1094	ATE				
1.9 TDi	66	10/97 → 07/00	FCP1094	ATE				
1.9 TDi	81	10/97 → 07/00	FCP1094	ATE				
1.9 TDi 4x4	74	10/97 → 07/00	FCP1094	ATE				
1.9 TDi (4x4)	77	11/04 → 12/10	FCP1641	ATE	PR 1ZE			
1.9 TDi (4x4)	77	11/04 → 12/10				FCP4316	BOSCH	
1.9 TDi 8v (1Z5)	77	05/04 → 12/10	FCP1094	ATE	PR 1ZM, 1ZF			
1.9 TDi 8v (1Z5)	77	05/04 → 12/10				FCP4316	BOSCH	
1.9 TDi EU3		10/96 → 07/00	FCP1094	ATE				
1.9 TDi EU3 (4x4)	74	08/00 → 05/04	FCP1094	ATE				
1.9 TDi EU3 (4x4)	74	08/00 → 05/04				FCP541	LUCAS/TRW	
2.0 (4x4)	85	08/00 → 05/04	FCP1094	ATE				
2.0 (4x4)	85	08/00 → 05/04				FCP541	LUCAS/TRW	
2.0 16v (1Z3,1Z5)	100	02/04 → 05/10	FCP1641	ATE	PR 1ZE			
2.0 16v (1Z3,1Z5)	100	02/04 → 05/10				FCP4316	BOSCH	
2.0 EU4	85	08/00 → 05/04	FCP1094	ATE				
2.0 EU4	85	08/00 → 05/04				FCP541	LUCAS/TRW	
2.0 i	85	10/96 → 07/00	FCP1094	ATE				
2.0 TDi 16v (1Z3, 1Z5)	125	04/06 →	FCP1641	ATE	PR 1LP/1LL			
2.0 TDi 16v (1Z3, 1Z5)	125	04/06 →				FCP4316	BOSCH	
2.0 TDi 16v (1Z3,1Z5)	103	02/04 →	FCP1641	ATE	PR 1ZE			
2.0 TDi 16v (1Z3,1Z5)	103	02/04 →				FCP4316	BOSCH	
2.0 TDi 16v (1Z3,1Z5)	81	03/10 →	FCP1641	ATE	PR 1ZE			
2.0 TDi 16v (1Z3,1Z5)	81	03/10 →				FCP4316	BOSCH	
2.0 TDi 8v (1Z3,1Z5)	103	11/05 → 05/10	FCP1641	ATE	PR 1ZE			
2.0 TDi 8v (1Z3,1Z5)	103	11/05 → 05/10				FCP4316	BOSCH	
2.0 TFSi/TSi 16v (1Z3,1Z5)	147	10/05 →	FCP1641	ATE	PR 1LP/1LL			
2.0 TFSi/TSi 16v (1Z3,1Z5)	147	10/05 →				FCP4316	BOSCH	

Octavia (5E3)

1.2 TSI	63	11/12 →	FCP4425	LUCAS/TRW	PR 1LG (340mm disc)			
1.2 TSI	63	11/12 →				FCP1491	LUCAS/TRW	PR Number: 1KD
1.2 TSI	77	11/12 →	FCP4425	LUCAS/TRW	PR 1LG (340mm disc)			
1.2 TSI	77	11/12 →				FCP1491	LUCAS/TRW	PR Number: 1KD
1.4 TSI	103	11/12 →	FCP4425	LUCAS/TRW	PR 1LG (340mm disc)			
1.4 TSI	103	11/12 →				FCP1491	LUCAS/TRW	PR Number: 1KD
1.6 TDI	66	11/12 →	FCP4425	LUCAS/TRW	PR 1LG (340mm disc)			
1.6 TDI	66	11/12 →				FCP1491	LUCAS/TRW	PR Number: 1KD
1.6 TDI	77	11/12 →	FCP4425	LUCAS/TRW	PR 1LG (340mm disc)			
1.6 TDI	77	11/12 →				FCP1491	LUCAS/TRW	PR Number: 1KD
1.8 TSI	132	11/12 →	FCP4425	LUCAS/TRW	PR 1LG (340mm disc)			
1.8 TSI	132	11/12 →				FCP1491	LUCAS/TRW	PR Number: 1KD
2.0 TDI	105	11/12 →	FCP4425	LUCAS/TRW	PR 1LG (340mm disc)			
2.0 TDI	105	11/12 →				FCP1491	LUCAS/TRW	PR Number: 1KD
2.0 TDI	110	11/12 →	FCP4425	LUCAS/TRW	PR 1LG (340mm disc)			
2.0 TDI	110	11/12 →				FCP1491	LUCAS/TRW	PR Number: 1KD
2.0 TDI RS	135	05/13 →	FCP4425	LUCAS/TRW	PR 1LG (340mm disc)			
2.0 TDI RS	135	05/13 →				FCP1491	LUCAS/TRW	PR Number: 1KD
2.0 TSI RS	162	05/13 →	FCP4425	LUCAS/TRW	PR 1LG (340mm disc)			
2.0 TSI RS	162	05/13 →				FCP1491	LUCAS/TRW	PR Number: 1KD

Octavia Combi (5E5)

1.2 TSI	63	11/12 →	FCP4425	LUCAS/TRW	PR 1LG (340mm disc)			
1.2 TSI	63	11/12 →				FCP1491	LUCAS/TRW	PR Number: 1KD
1.2 TSI	77	11/12 →	FCP4425	LUCAS/TRW	PR 1LG (340mm disc)			
1.2 TSI	77	11/12 →				FCP1491	LUCAS/TRW	PR Number: 1KD
1.4 TSI	103	11/12 →	FCP4425	LUCAS/TRW	PR 1LG (340mm disc)			
1.4 TSI	103	11/12 →				FCP1491	LUCAS/TRW	PR Number: 1KD
1.6 TDI	66	11/12 →	FCP4425	LUCAS/TRW	PR 1LG (340mm disc)			
1.6 TDI	66	11/12 →				FCP1491	LUCAS/TRW	PR Number: 1KD
1.6 TDI	77	11/12 →	FCP4425	LUCAS/TRW	PR 1LG (340mm disc)			
1.6 TDI	77	11/12 →				FCP1491	LUCAS/TRW	PR Number: 1KD
1.6 TDI 4x4	77	11/12 →	FCP4425	LUCAS/TRW	PR 1LG (340mm disc)			
1.6 TDI 4x4	77	11/12 →				FCP1491	LUCAS/TRW	PR Number: 1KD
1.8 TSI	132	11/12 →	FCP4425	LUCAS/TRW	PR 1LG (340mm disc)			
1.8 TSI	132	11/12 →				FCP1491	LUCAS/TRW	PR Number: 1KD
1.8 TSI 4x4	132	11/12 →	FCP4425	LUCAS/TRW	PR 1LG (340mm disc)			
1.8 TSI 4x4	132	11/12 →				FCP1491	LUCAS/TRW	PR Number: 1KD
2.0 TDI	105	11/12 →	FCP4425	LUCAS/TRW	PR 1LG (340mm disc)			

For material availability see page 16-18 / Per la disponibilità materiali vedere a pagina 16-18

...SKODA	kW								
					NOTE				NOTE
...Octavia Combi (5E5)									
2.0 TDI	105	11/12 →				FCP1491	LUCAS/TRW	PR Number: 1KD
2.0 TDI	110	11/12 →	FCP4425	LUCAS/TRW	PR 1LG (340mm disc)			
2.0 TDI	110	11/12 →				FCP1491	LUCAS/TRW	PR Number: 1KD
2.0 TDI 4x4	110	11/12 →	FCP4425	LUCAS/TRW	PR 1LG (340mm disc)			
2.0 TDI 4x4	110	11/12 →				FCP1491	LUCAS/TRW	PR Number: 1KD
2.0 TDI RS	135	05/13 →	FCP4425	LUCAS/TRW	PR 1LG (340mm disc)			
2.0 TDI RS	135	05/13 →				FCP1491	LUCAS/TRW	PR Number: 1KD
2.0 TSI RS	162	11/12 →	FCP4425	LUCAS/TRW	PR 1LG (340mm disc)			
2.0 TSI RS	162	11/12 →				FCP1491	LUCAS/TRW	PR Number: 1KD
Octavia II								
1.4	59	06/04 →				FCP1636	LUCAS/TRW	
1.6		06/04 →				FCP1636	LUCAS/TRW	
1.6 FSI	85	06/04 →				FCP1636	LUCAS/TRW	
1.9 TDi		06/04 →				FCP1636	LUCAS/TRW	
1.9 TDi	77	06/04 →				FCP1636	LUCAS/TRW	
2.0 FSi	110	06/04 →	FCP1641	ATE				
2.0 FSi	110	06/04 →				FCP1636	LUCAS/TRW	
2.0 i	110	06/04 →	FCP1641	ATE				
2.0 i	110	06/04 →				FCP1636	LUCAS/TRW	
2.0 TDi	103	06/04 →	FCP1641	ATE				
2.0 TDi	103	06/04 →				FCP1636	LUCAS/TRW	
OCTAVIA III (5E3, NL3, NR3)								
1.6	81	01/14 →	FCP1491	LUCAS/TRW				
1.6	81	01/14 →	FCP4433	LUCAS/TRW				
Octavia Scout								
1.8 TFSi 16v (4x4)	112	03/09 →	FCP1641	ATE	PR 1ZE			
1.8 TFSi 16v (4x4)	112	03/09 →				FCP4316	BOSCH	
1.8 TSi 16v (4x4)	118	11/08 →	FCP1641	ATE	PR 1ZE			
1.8 TSi 16v (4x4)	118	11/08 →				FCP4316	BOSCH	
2.0 TDi 8v (1Z5)	103	10/06 → 05/10	FCP1641	ATE	PR 1ZE			
2.0 TDi 8v (1Z5)	103	10/06 → 05/10				FCP4316	BOSCH	
Superb								
1.4 TFSi 16v (3T4)	92	08/08 →	FCP1641	ATE	PR 1LJ/1ZA, 1ZE			
1.4 TFSi 16v (3T4)	92	08/08 →				FCP4316	BOSCH	
1.4 TFSi 16v (3T5)	92	08/08 →	FCP1641	ATE	PR 1LJ/1ZA, 1ZE			
1.4 TFSi 16v (3T5)	92	08/08 →				FCP4316	BOSCH	
1.6 TDi 16v (3T4)	77	09/10 →	FCP1641	ATE	PR 1LJ/1ZA			
1.6 TDi 16v (3T4)	77	09/10 →				FCP4316	BOSCH	
1.6 TDi 16v (3T5)	77	09/10 →	FCP1641	ATE	PR 1LJ/1ZA			
1.6 TDi 16v (3T5)	77	09/10 →				FCP4316	BOSCH	
1.8 FSi/TSi 16v (3T4)	118	03/08 →	FCP1641	ATE	PR 1LJ/1ZA, 1ZE			
1.8 FSi/TSi 16v (3T4)	118	03/08 →				FCP4316	BOSCH	
1.8 TFSi 16v (3T4)	112	03/09 →	FCP1641	ATE	PR 1LJ/1ZA/1ZE			
1.8 TFSi 16v (3T4)	112	03/09 →				FCP4316	BOSCH	
1.8 TFSi 16v (3T5)	112	03/09 →	FCP1641	ATE	PR 1LJ/1ZA/1ZE			
1.8 TFSi 16v (3T5)	112	03/09 →				FCP4316	BOSCH	
1.8 TSi 16v (3T5)	118	03/09 →	FCP1641	ATE	PR 1LJ/1ZA/1ZE			
1.8 TSi 16v (3T5)	118	03/09 →				FCP4316	BOSCH	
1.9 TDi 8v (3T4)	77	03/08 →	FCP1641	ATE	PR 1LJ/1ZA/1ZE			
1.9 TDi 8v (3T4)	77	03/08 →				FCP4316	BOSCH	
1.9 TDi 8v (3T5)	77	03/08 →	FCP1641	ATE	PR 1LJ/1ZA/1ZE			
1.9 TDi 8v (3T5)	77	03/08 →				FCP4316	BOSCH	
2.0 TDi 16v (3T4)	103	01/09 →	FCP1641	ATE	PR 1LJ/1ZA/1ZE			
2.0 TDi 16v (3T4)	103	01/09 →				FCP4316	BOSCH	
2.0 TDi 16v (3T4)	125	06/08 →	FCP1641	ATE	PR 1LJ/1ZA/1ZE			
2.0 TDi 16v (3T4)	125	06/08 →				FCP4316	BOSCH	
2.0 TDi 16v (3T5)	103	01/09 →	FCP1641	ATE	PR 1LJ/1ZA/1ZE			
2.0 TDi 16v (3T5)	103	01/09 →				FCP4316	BOSCH	
2.0 TDi 16v (3T5)	125	06/08 →	FCP1641	ATE	PR 1LJ/1ZA/1ZE			
2.0 TDi 16v (3T5)	125	06/08 →				FCP4316	BOSCH	
2.0 TDi 8v (3T4)	103	03/08 → 03/10	FCP1641	ATE	PR 1LJ/1ZA/1ZE			
2.0 TDi 8v (3T4)	103	03/08 → 03/10				FCP4316	BOSCH	
2.0 TDi 8v (3T5)	103	03/08 → 03/10	FCP1641	ATE	PR 1LJ/1ZA/1ZE			
2.0 TDi 8v (3T5)	103	03/08 → 03/10				FCP4316	BOSCH	
Superb (3U4)								
1.8 T	110	12/01 → 03/08	FCP1717	ATE				
1.8 T	110	12/01 → 03/08				FCP1491	LUCAS/TRW	PR Number: 1KD
1.9 TDI	74	08/02 → 10/05	FCP1717	ATE				
1.9 TDI	74	08/02 → 10/05				FCP1491	LUCAS/TRW	PR Number: 1KD
1.9 TDI	77	10/05 → 05/07	FCP1717	ATE				
1.9 TDI	77	10/05 → 05/07				FCP1491	LUCAS/TRW	PR Number: 1KD

For material availability see page 16-18 / Per la disponibilità materiali vedere a pagina 16-18

FERODO RACING
Updated on November 2020



kW

...SKODA

...Superb (3U4)

1.9 TDI	85	01/07 → 03/08	FCP1717	ATE				
1.9 TDI	85	01/07 → 03/08				FCP1491	LUCAS/TRW	PR Number: 1KD
1.9 TDI	96	12/01 → 03/08	FCP1717	ATE				
1.9 TDI	96	12/01 → 03/08				FCP1491	LUCAS/TRW	PR Number: 1KD
2.0	85	12/01 → 03/08	FCP1717	ATE				
2.0	85	12/01 → 03/08				FCP1491	LUCAS/TRW	PR Number: 1KD
2.0 TDI	103	10/05 → 03/08	FCP1717	ATE				
2.0 TDI	103	10/05 → 03/08				FCP1491	LUCAS/TRW	PR Number: 1KD
2.5 TDI	114	12/01 → 08/03	FCP1717	ATE				
2.5 TDI	114	12/01 → 08/03				FCP1491	LUCAS/TRW	PR Number: 1KD
2.5 TDI	120	06/03 → 03/08	FCP1717	ATE				
2.5 TDI	120	06/03 → 03/08				FCP1491	LUCAS/TRW	PR Number: 1KD
2.8 V6	142	12/01 → 03/08	FCP1717	ATE				
2.8 V6	142	12/01 → 03/08				FCP1491	LUCAS/TRW	PR Number: 1KD

SUPERB (3V3)

1.4 TSI	110	03/15 →	FCP4433	LUCAS/TRW	Pr Number 1ZA			
1.4 TSI	110	03/15 →	FCP4425	LUCAS/TRW	Pr Number 1LA			
1.4 TSI	110	03/15 →				FCP4697	ATE	For PR code:1KU/1KZ
1.4 TSI	92	03/15 →	FCP4433	LUCAS/TRW	Pr Number 1ZA			
1.4 TSI	92	03/15 →	FCP4425	LUCAS/TRW	Pr Number 1LA			
1.4 TSI	92	03/15 →				FCP4697	ATE	For PR code:1KU/1KZ
1.4 TSI 4x4	110	03/15 →	FCP4433	LUCAS/TRW	Pr Number 1ZA			
1.4 TSI 4x4	110	03/15 →	FCP4425	LUCAS/TRW	Pr number 1LA			
1.4 TSI 4x4	110	03/15 →				FCP4697	ATE	For PR code:1KU/1KZ
1.6 TDI	88	03/15 →	FCP4433	LUCAS/TRW	Pr Number 1ZA			
1.6 TDI	88	03/15 →	FCP4425	LUCAS/TRW	Pr Number 1LA			
1.6 TDI	88	03/15 →				FCP4697	ATE	For PR code:1KU/1KZ
1.8 TSI	132	03/15 →	FCP4433	LUCAS/TRW	Pr Number 1ZA			
1.8 TSI	132	03/15 →	FCP4425	LUCAS/TRW	Pr Number 1LA			
1.8 TSI	132	03/15 →				FCP4697	ATE	For PR code:1KU/1KZ
2.0 TDI	110	03/15 →	FCP4433	LUCAS/TRW	Pr Number 1ZA			
2.0 TDI	110	03/15 →	FCP4425	LUCAS/TRW	Pr Number 1LA			
2.0 TDI	110	03/15 →				FCP4697	ATE	For PR code:1KU/1KZ
2.0 TDI	140	03/15 →	FCP4433	LUCAS/TRW	Pr Number 1ZA			
2.0 TDI	140	03/15 →	FCP4425	LUCAS/TRW	Pr number 1LA			
2.0 TDI	140	03/15 →				FCP4697	ATE	For PR code:1KU/1KZ
2.0 TDI 4x4	110	03/15 →	FCP4433	LUCAS/TRW	Pr Number 1ZA			
2.0 TDI 4x4	110	03/15 →	FCP4425	LUCAS/TRW	Pr number 1LA			
2.0 TDI 4x4	110	03/15 →				FCP4697	ATE	For PR code:1KU/1KZ
2.0 TDI 4x4	140	03/15 →	FCP4433	LUCAS/TRW	1ZA			
2.0 TDI 4x4	140	03/15 →	FCP4425	LUCAS/TRW	Pr Number 1LA			
2.0 TDI 4x4	140	03/15 →				FCP4697	ATE	For PR code:1KU/1KZ
2.0 TSI	162	03/15 →	FCP4433	LUCAS/TRW	Pr Number 1ZA			
2.0 TSI	162	03/15 →	FCP4425	LUCAS/TRW	Pr Number 1LA			
2.0 TSI	162	03/15 →				FCP4697	ATE	For PR code:1KU/1KZ
2.0 TSI 4x4	206	03/15 →	FCP4433	LUCAS/TRW	Pr Number 1ZA			
2.0 TSI 4x4	206	03/15 →	FCP4425	LUCAS/TRW	Pr Number 1LA			
2.0 TSI 4x4	206	03/15 →				FCP4697	ATE	For PR code:1KU/1KZ

SUPERB Estate (3V5)

1.4 TSI	110	03/15 →	FCP4433	LUCAS/TRW	Pr Number 1ZA			
1.4 TSI	110	03/15 →	FCP4425	LUCAS/TRW	Pr Number 1LA			
1.4 TSI	110	03/15 →				FCP4697	ATE	For PR code:1KU/1KZ
1.4 TSI	92	03/15 →	FCP4433	LUCAS/TRW	Pr Number 1ZA			
1.4 TSI	92	03/15 →	FCP4425	LUCAS/TRW	Pr Number 1LA			
1.4 TSI	92	03/15 →				FCP4697	ATE	For PR code:1KU/1KZ
1.4 TSI 4x4	110	03/15 →	FCP4433	LUCAS/TRW	Pr Number 1ZA			
1.4 TSI 4x4	110	03/15 →	FCP4425	LUCAS/TRW	Pr Number 1LA			
1.4 TSI 4x4	110	03/15 →				FCP4697	ATE	For PR code:1KU/1KZ
1.6 TDI	88	03/15 →	FCP4433	LUCAS/TRW	Pr Number 1ZA			
1.6 TDI	88	03/15 →	FCP4425	LUCAS/TRW	Pr Number 1LA			
1.6 TDI	88	03/15 →				FCP4697	ATE	For PR code:1KU/1KZ
1.8 TSI	132	03/15 →	FCP4433	LUCAS/TRW	Pr Number 1ZA			
1.8 TSI	132	03/15 →	FCP4425	LUCAS/TRW	Pr Number 1LA			
1.8 TSI	132	03/15 →				FCP4697	ATE	For PR code:1KU/1KZ
2.0 TDI	110	03/15 →	FCP4433	LUCAS/TRW	Pr Number 1ZA			
2.0 TDI	110	03/15 →	FCP4425	LUCAS/TRW	Pr Number 1LA			
2.0 TDI	110	03/15 →				FCP4697	ATE	For PR code:1KU/1KZ
2.0 TDI	140	03/15 →	FCP4433	LUCAS/TRW	Pr Number 1ZA			
2.0 TDI	140	03/15 →	FCP4425	LUCAS/TRW	Pr Number 1LA			
2.0 TDI	140	03/15 →				FCP4697	ATE	For PR code:1KU/1KZ
2.0 TDI 4x4	110	03/15 →	FCP4433	LUCAS/TRW	Pr Number 1ZA			
2.0 TDI 4x4	110	03/15 →	FCP4425	LUCAS/TRW	Pr Number 1LA			
2.0 TDI 4x4	110	03/15 →				FCP4697	ATE	For PR code:1KU/1KZ
2.0 TDI 4x4	140	03/15 →	FCP4433	LUCAS/TRW	Pr Number 1ZA			
2.0 TDI 4x4	140	03/15 →	FCP4425	LUCAS/TRW	Pr Number 1LA			

For material availability see page 16-18 / Per la disponibilità materiali vedere a pagina 16-18

	kW				NOTE			NOTE
...SKODA								
...SUPERB Estate (3V5)								
2.0 TDI 4x4	140	03/15 →				FCP4697	ATE	For PR code:1KU/1KZ
2.0 TSI	162	03/15 →	FCP4433	LUCAS/TRW	Pr Number 1ZA			
2.0 TSI	162	03/15 →	FCP4425	LUCAS/TRW	Pr Number 1LA			
2.0 TSI	162	03/15 →				FCP4697	ATE	For PR code:1KU/1KZ
2.0 TSI 4x4	206	03/15 →	FCP4433	LUCAS/TRW	Pr number 1ZA			
2.0 TSI 4x4	206	03/15 →	FCP4425	LUCAS/TRW	Pr number 1LA			
2.0 TSI 4x4	206	03/15 →				FCP4697	ATE	For PR code:1KU/1KZ
SUPERB II (3T4)								
3.6 FSI 4x4	191	11/08 → 05/15	FCP1765	ATE	For PR code:1LK			
3.6 FSI 4x4	191	11/08 → 05/15	FCP4223	ATE				
3.6 FSI 4x4	191	11/08 → 05/15				FCP1636	LUCAS/TRW	
SUPERB II Estate (3T5)								
3.6 V6 4x4	191	10/09 → 05/15	FCP1765	ATE	For PR code:1LK			
3.6 V6 4x4	191	10/09 → 05/15	FCP4223	ATE				
3.6 V6 4x4	191	10/09 → 05/15				FCP1636	LUCAS/TRW	
Yeti								
1.6 TDi 16v (5L7)	77	11/10 →	FCP1094	ATE	PR 1ZF			
1.6 TDi 16v (5L7)	77	11/10 →	FCP1641	ATE	PR 1ZE			
1.6 TDi 16v (5L7)	77	11/10 →				FCP4316	BOSCH	
1.6 TDi 16v (5L7)	77	11/10 →				FCP4316	BOSCH	
1.8 TFSi 16v (4x4)	112	11/09 →	FCP1641	ATE	PR 1ZE			
1.8 TFSi 16v (4x4)	112	11/09 →				FCP4316	BOSCH	
1.8 TSi 16v (4x4)	118	05/09 →	FCP1641	ATE	PR 1ZE			
1.8 TSi 16v (4x4)	118	05/09 →				FCP4316	BOSCH	
2.0 TDi 16v (4x4)	103	05/09 →	FCP1641	ATE	PR 1ZE			
2.0 TDi 16v (4x4)	103	05/09 →				FCP4316	BOSCH	
2.0 TDi 16v (4x4)	125	11/09 →	FCP1641	ATE	PR 1ZA			
2.0 TDi 16v (4x4)	125	11/09 →				FCP4316	BOSCH	
2.0 TDi 16v (4x4)	81	11/09 →	FCP1641	ATE	PR 1ZE			
2.0 TDi 16v (4x4)	81	11/09 →				FCP4316	BOSCH	
2.0 TDi 16v (5L7)	103	05/09 →	FCP1641	ATE	PR 1ZE			
2.0 TDi 16v (5L7)	103	05/09 →				FCP4316	BOSCH	
2.0 TDi 16v (5L7)	81	11/09 →	FCP1094	ATE	PR 1ZF			
2.0 TDi 16v (5L7)	81	11/09 →	FCP1641	ATE	PR 1ZE			
2.0 TDi 16v (5L7)	81	11/09 →				FCP4316	BOSCH	
2.0 TDi 16v (5L7)	81	11/09 →				FCP4316	BOSCH	
SMART (until 2002 MCC)								
Cabrio (450)								
Cabrio 0.6	40	03/00 → 01/03	FCP1162	BOSCH				
Cabrio 0.6	45	01/01 → 01/04	FCP1162	BOSCH				
Cabrio 0.6	52	01/01 → 01/04	FCP1162	BOSCH				
Cabrio 0.7	40	03/00 → 01/03	FCP1162	BOSCH				
Cabrio 0.7	45	01/03 → 01/04	FCP1162	BOSCH				
Cabrio 0.7	46	01/01 → 01/03	FCP1162	BOSCH				
Cabrio 0.7	55	05/03 → 01/04	FCP1162	BOSCH				
Cabrio 0.8 CDi	30	03/02 → 01/04	FCP1162	BOSCH				
City Coupe (450)								
City Coupe 0.6	33	07/98 → 01/04	FCP1162	BOSCH				
City Coupe 0.6	40	07/98 → 01/04	FCP1162	BOSCH				
City Coupe 0.6	45	10/00 → 10/03	FCP1162	BOSCH				
City Coupe 0.6	52	06/02 → 01/04	FCP1162	BOSCH				
City Coupe 0.7	33	07/98 → 01/04	FCP1162	BOSCH				
City Coupe 0.7	37	01/03 → 01/04	FCP1162	BOSCH				
City Coupe 0.7	40	08/98 → 01/03	FCP1162	BOSCH				
City Coupe 0.7	45	01/03 → 01/04	FCP1162	BOSCH				
City Coupe 0.7	55	05/03 → 01/04	FCP1162	BOSCH				
City Coupe 0.8 CDi	30	12/99 → 01/04	FCP1162	BOSCH				
Crossblade (450)								
Crossblade 0.6	52	09/02 → 12/03	FCP1162	BOSCH				
Fortwo (450)								
Fortwo Cabrio 0.6	55	08/03 → 12/06	FCP1162	BOSCH				
Fortwo Cabrio 0.7	45	08/03 → 12/06	FCP1162	BOSCH				
Fortwo Cabrio 0.7	55	08/03 → 12/06	FCP1162	BOSCH				
Fortwo Cabrio 0.8 CDi	30	08/03 → 12/06	FCP1162	BOSCH				
Fortwo Coupe 0.6	37	01/04 → 02/07	FCP1162	BOSCH				
Fortwo Coupe 0.6	45	01/04 → 02/07	FCP1162	BOSCH				

For material availability see page 16-18 / Per la disponibilità materiali vedere a pagina 16-18

FERODO RACING
Updated on November 2020

	kW				NOTE			NOTE
...SMART (until 2002 MCC)								
...Fortwo (450)								
Fortwo Coupe 0.6	55	01/04 → 02/07	FCP1162	BOSCH				
Fortwo Coupe 0.7	37	01/04 → 02/07	FCP1162	BOSCH				
Fortwo Coupe 0.7	45	01/04 → 02/07	FCP1162	BOSCH				
Fortwo Coupe 0.7	55	01/04 → 02/07	FCP1162	BOSCH				
Fortwo Coupe 0.8 CDi	30	01/04 → 02/07	FCP1162	BOSCH				
Fortwo (451)								
Fortwo Cabrio 0.0 Elektric	20	12/10 →	FCP1162	BOSCH				
Fortwo Cabrio 0.0 Elektric	35	09/11 →	FCP1162	BOSCH				
Fortwo Cabrio 0.8 CDi	33	01/07 →	FCP1162	BOSCH				
Fortwo Cabrio 0.8 CDi	40	08/09 →	FCP1162	BOSCH				
Fortwo Cabrio 1.0	52	01/07 →	FCP1162	BOSCH				
Fortwo Cabrio 1.0	62	01/07 →	FCP1162	BOSCH				
Fortwo Cabrio 1.0	72	01/07 →	FCP1162	BOSCH				
Fortwo Cabrio 1.0	75	07/10 →	FCP1162	BOSCH				
Fortwo Cabrio 1.0 Hybrid	52	01/07 →	FCP1162	BOSCH				
Fortwo Coupe 0.0 Elektric	20	12/10 →	FCP1162	BOSCH				
Fortwo Coupe 0.0 Elektric	35	09/11 →	FCP1162	BOSCH				
Fortwo Coupe 0.8 CDi	33	01/07 →	FCP1162	BOSCH				
Fortwo Coupe 0.8 CDi	40	08/09 →	FCP1162	BOSCH				
Fortwo Coupe 1.0	45	01/07 →	FCP1162	BOSCH				
Fortwo Coupe 1.0	52	01/07 →	FCP1162	BOSCH				
Fortwo Coupe 1.0	62	01/07 →	FCP1162	BOSCH				
Fortwo Coupe 1.0	72	01/07 →	FCP1162	BOSCH				
Fortwo Coupe 1.0	75	07/10 →	FCP1162	BOSCH				
Fortwo Coupe 1.0 Hybrid	45	01/07 →	FCP1162	BOSCH				
Fortwo Coupe 1.0 Hybrid	52	01/07 →	FCP1162	BOSCH				
Roadster (452)								
Roadster 0.7	45	07/03 → 04/06	FCP1162	BOSCH				
Roadster 0.7	60	01/04 → 08/04	FCP1162	BOSCH				
Roadster 0.7	60	03/04 → 04/06	FCP1162	BOSCH				
Roadster Coupe 0.7	45	07/03 → 04/06	FCP1162	BOSCH				
Roadster Coupe 0.7	60	01/03 → 04/06	FCP1162	BOSCH				
Roadster Coupe 0.7	60	03/04 → 04/06	FCP1162	BOSCH				
SSANGYONG								
Korando								
2.3 16V	103	10/97 →	FCP600	AKEBONO				
SUBARU								
Baja (US)								
2.5		01/01 →	FCP1639	TOKICO				
2.5 Turbo		01/01 →	FCP1639	TOKICO				
BRZ								
2.0 L	147	03/12 →	FCP1639	SUMITOMO				
2.0 L	147	03/12 →				FCP4187	SUMITOMO	
Forester (US)								
2.5 Turbo	193	02/11 →	FCP1639	TOKICO				
Forester I (SF)								
2.0 S Turbo	130	04/01 → 09/02	FCP1639	TOKICO				
Forester II (SG)								
2.0	92	09/02 →	FCP1639	TOKICO				
2.0	92	09/02 →				FCP1333	AKEBONO	
2.0 S Turbo	130	09/02 →	FCP1639	TOKICO				
2.0 S Turbo	130	09/02 →				FCP1333	AKEBONO	
2.0 X	116	09/01 →	FCP1639	TOKICO				
2.0 X	116	09/01 →				FCP1333	AKEBONO	
2.5	155	12/01 →	FCP1639	TOKICO				
2.5	155	12/01 →				FCP1333	AKEBONO	
2.5	155	12/03 →	FCP1639	TOKICO				
2.5 XT	169	09/01 →	FCP1639	TOKICO				
2.5 XT	169	09/01 →				FCP1333	AKEBONO	

For material availability see page 16-18 / Per la disponibilità materiali vedere a pagina 16-18

...SUBARU	kW					NOTE			NOTE
Forester III (SH)									
2.0 AWD	110	01/08 →	FCP1639	TOKICO					
2.0 AWD	110	01/08 →				FCP1947	AKEBONO		
2.0 AWD	110	01/10 →	FCP1639	TOKICO					
2.0 AWD	110	01/10 →				FCP1947	AKEBONO		
2.0 D AWD	108	09/08 →	FCP1639	TOKICO					
2.0 D AWD	108	09/08 →				FCP1947	AKEBONO		
2.5 AWD	126	01/09 →	FCP1639	TOKICO					
2.5 AWD	126	01/09 →				FCP1947	AKEBONO		
2.5 AWD	169	06/08 →	FCP1639	TOKICO					
2.5 AWD	169	06/08 →				FCP1947	AKEBONO		
Forester IV (SJ)									
2.0 XT	177	03/13 →	FCP1984	AKEBONO					
Impreza									
1.5 R		01/01 →	FCP1639	TOKICO					
1.6 16V		09/98 →	FCP1327	AKEBONO					
1.6 16V		09/98 →				FCP1333	AKEBONO		
1.6 GF3, GC3 16V		05/93 → 08/98	FCP789	AKEBONO					
1.6 GF3, GC3 16V		05/93 → 08/98				FCP790	AKEBONO	ABS	
1.8 GF6 16V		05/93 → 08/98	FCP789	AKEBONO					
1.8 GF6 16V		05/93 → 08/98				FCP790	AKEBONO	ABS	
2.0 16V		01/94 → 08/98	FCP789	AKEBONO					
2.0 16V		01/94 → 08/98				FCP790	AKEBONO	ABS	
2.0 16V		01/97 → 12/98	FCP1327	AKEBONO					
2.0 16V		01/97 → 12/98				FCP1333	AKEBONO		
2.0 GC8 (Turbo) 16V		01/94 → 08/98	FCP948	AKEBONO					
2.0 GC8 (Turbo) 16V		01/94 → 08/98				FCP790	AKEBONO		
2.0 i	92	12/00 →	FCP986	SUMITOMO					
2.0 i	92	12/00 →				FCP1333	AKEBONO		
2.0 i	92	01/01 → 12/07	FCP1639	TOKICO					
2.0 i 4x4 16V		09/98 →	FCP1327	AKEBONO					
2.0 i 4x4 16V		09/98 →				FCP790	AKEBONO		
2.0 R		01/01 →	FCP1639	TOKICO					
2.0 Sport		01/01 →	FCP1639	TOKICO					
2.0 STi (Brembo KIT 6 pistons)		01/08 →	FRP3100	BREMBO					
2.0 STi (Brembo KIT 6 pistons)		01/08 →				FCP1562	BREMBO		
2.0 Sti 5th generation		01/17 →	FRP3100	BREMBO					
EVO Gr N		01/06 →	FRP216	AP RACING					
EVO Gr N		01/06 →				FRP219	AP RACING		
Impreza (US)									
2.0 Turbo WRX	160	01/01 → 12/05	FCP1639	TOKICO					
2.5 RS/TS		01/01 → 12/07	FCP1639	TOKICO					
2.5 WRX Turbo	169	01/01 → 12/05	FCP1639	TOKICO					
Impreza Hatchback									
2.5 WRX	169	09/05 →	FCP1639	TOKICO					
2.5 WRX	169	09/05 →				FCP1947	AKEBONO		
Impreza Hatchback (GR, GH, G3)									
1.5 All-wheel Drive	79	02/08 →	FCP1639	TOKICO					
1.5 All-wheel Drive	79	02/08 →				FCP1947	AKEBONO		
1.5 F	79	02/08 →				FCP1947	AKEBONO		
2.0	110	02/08 →				FCP1947	AKEBONO		
2.0 D All-wheel Drive	110	01/09 →	FCP1639	TOKICO					
2.0 D All-wheel Drive	110	01/09 →				FCP1947	AKEBONO		
2.0 i All-wheel Drive	110	01/08 →	FCP1639	TOKICO					
2.0 i All-wheel Drive	110	01/08 →				FCP1947	AKEBONO		
2.5 All-wheel Drive	169	01/08 →	FCP1639	TOKICO					
2.5 All-wheel Drive	169	01/08 →				FCP1947	AKEBONO		
Impreza I (GC)									
1.6 i	70	06/98 → 12/00	FCP986	SUMITOMO					
1.6 i	70	06/98 → 12/00				FCP790	AKEBONO	(+) ABS	
2.0 i 4WD	92	06/98 → 12/00	FCP986	SUMITOMO	01/99->				
2.0 i 4WD	92	06/98 → 12/00				FCP1333	AKEBONO	->12/98, (+) ABS	
2.0 Turbo GT 4WD	160	06/98 → 12/00	FCP986	SUMITOMO					
Impreza I SW (GF)									
2.0 16V AWD	92	06/98 → 12/00	FCP986	SUMITOMO					
2.0 16V AWD	92	06/98 → 12/00				FCP790	AKEBONO	->12/98, (+) ABS	
2.0 Turbo GT 4WD	160	06/98 → 12/00	FCP986	SUMITOMO					

For material availability see page 16-18 / Per la disponibilità materiali vedere a pagina 16-18

FERODO RACING
Updated on November 2020

...SUBARU

	kW				NOTE			NOTE
Impreza II (GD, GG)								
2.0 WRX STi	195	11/01 → 07/05	**FRP3067**	BREMBO				
2.0 WRX STi	195	11/01 → 07/05				**FCP1562**	BREMBO	
2.0 WRX Turbo	160	10/00 → 12/05	**FCP986**	SUMITOMO				
2.0 WRX Turbo	160	10/00 → 12/05				**FCP1372**	AKEBONO	
2.0 WRX Turbo	165	12/02 → 03/07	**FCP986**	SUMITOMO				
2.0 WRX Turbo	165	12/02 → 03/07				**FCP1372**	AKEBONO	
2.0 WRX Turbo	165	01/15 →	**FCP1984**	TOKICO				
2.0 WRX Turbo	165	01/15 →				**FCP1947**	TOKICO	
2.5 i WRX	169	09/05 → 12/08	**FCP986**	SUMITOMO				
2.5 i WRX	169	09/05 → 12/08				**FCP1372**	AKEBONO	
2.5 WRX STi	206	09/05 → 12/07	**FRP3067**	BREMBO				
2.5 WRX STi	206	09/05 → 12/07				**FCP1562**	BREMBO	
Impreza II SW (GD, GG)								
2.0 Turbo	160	12/00 →	**FCP986**	SUMITOMO				
2.0 Turbo	160	12/00 → 12/05	**FCP986**	SUMITOMO				
2.0 Turbo	160	12/00 → 12/05				**FCP1372**	AKEBONO	
2.0 WRX Turbo	165	12/02 → 09/06	**FCP986**	SUMITOMO				
2.0 WRX Turbo	165	12/02 → 09/06				**FCP1372**	AKEBONO	
2.5 WRX	169	09/05 → 03/07	**FCP986**	SUMITOMO				
2.5 WRX	169	09/05 → 03/07				**FCP1372**	AKEBONO	
Impreza III (GR, GH, G3)								
2.5 WRX SE AWD	195	06/12 →	**FRP3067**	BREMBO				
2.5 WRX SE AWD	195	06/12 →				**FCP1562**	BREMBO	
2.5 WRX STi	221	01/08 →	**FRP3067**	BREMBO				
2.5 WRX STi	221	01/08 →				**FCP1562**	BREMBO	
2.5 WRX STi	294	04/10 →	**FRP3067**	BREMBO				
2.5 WRX STi	294	04/10 →				**FCP1562**	BREMBO	
2.5 WRX STi AWD	221	01/11 →	**FRP3067**	BREMBO				
2.5 WRX STi AWD	221	01/11 →				**FCP1562**	BREMBO	
Impreza Outback (US)								
2.2		01/01 → 12/02	**FCP1639**	TOKICO				
Impreza Saloon (GR)								
1.5	79	02/08 →				**FCP1947**	AKEBONO	
1.5 AWD	79	02/08 →	**FCP1639**	TOKICO				
1.5 AWD	79	02/08 →				**FCP1947**	AKEBONO	
Justy (III)								
1.3 1.3i G3X 16V		09/03 →	**FCP1459**	BOSCH				
Legacy								
1.8 4WD (Turbo)	76	07/90 → 12/93	**FCP948**	AKEBONO				
1.8 4WD (Turbo)	76	07/90 → 12/93				**FCP790**	AKEBONO	
1.8 BC3, BF3 16V	76	10/89 → 09/92	**FCP789**	AKEBONO				
1.8 BC3, BF3 16V	76	10/89 → 09/92				**FCP790**	AKEBONO	
2.0		01/01 →	**FCP1639**	TOKICO				
2.0 (Turbo) 16V	147	10/91 → 12/93	**FCP948**	AKEBONO				
2.0 (Turbo) 16V	147	10/91 → 12/93				**FCP790**	AKEBONO	
2.0 2.0 i BE/BH		08/00 →	**FCP1327**	AKEBONO				
2.0 2.0 i BE/BH		08/00 →				**FCP1333**	AKEBONO	
2.0 BC5, BF5 16V	85	10/91 → 12/93	**FCP789**	AKEBONO				
2.0 BC5, BF5 16V	85	10/91 → 12/93				**FCP790**	AKEBONO	
2.0 BG5, BD5 16V		01/94 → 08/97	**FCP789**	AKEBONO				
2.0 BG5, BD5 16V		01/94 → 08/97				**FCP790**	AKEBONO	
2.0 TD		01/01 →	**FCP1639**	TOKICO				
2.2 BF7, 8 16V	100	10/89 → 12/93	**FCP789**	AKEBONO				
2.2 BF7, 8 16V	100	10/89 → 12/93				**FCP790**	AKEBONO	
2.2 BG7, BD7 16V		01/94 → 08/97	**FCP789**	AKEBONO				
2.2 BG7, BD7 16V		01/94 → 08/97				**FCP790**	AKEBONO	
2.5		01/01 →	**FCP1639**	TOKICO				
2.5 16V		01/96 → 08/97	**FCP789**	AKEBONO				
2.5 16V		01/96 → 08/97				**FCP790**	AKEBONO	
2.5 16V		01/02 →	**FCP1327**	AKEBONO				
2.5 16V		01/02 →				**FCP1333**	AKEBONO	
Legacy (US)								
2.5		01/01 →	**FCP1639**	TOKICO				
2.5 GT		01/01 → 12/04	**FCP1639**	TOKICO				

For material availability see page 16-18 / Per la disponibilità materiali vedere a pagina 16-18

...SUBARU						NOTE			NOTE
Legacy IV									
2.0	101	09/03 →	FCP1639	TOKICO					
2.0	101	09/03 →					FCP1947	AKEBONO	
2.0	121	06/05 →	FCP1984	AKEBONO					
2.0	121	06/05 →					FCP1333	AKEBONO	
2.0	132	06/05 →	FCP1984	AKEBONO					
2.0	140	06/05 →	FCP1984	AKEBONO					
2.0 D	110	02/08 →	FCP1639	TOKICO					
2.0 D	110	02/08 →					FCP1947	AKEBONO	
2.0 R	110	09/07 →	FCP1984	AKEBONO					
2.0 R	110	09/07 →					FCP1333	AKEBONO	
2.5	121	09/03 →	FCP1639	TOKICO					
2.5	121	09/03 →					FCP1947	AKEBONO	
2.5 i	127	09/07 →	FCP1639	TOKICO					
2.5 i	127	09/07 →					FCP1947	AKEBONO	
3.0 R	180	09/03 →	FCP1984	AKEBONO					
3.0 R	180	09/03 →					FCP1333	AKEBONO	
Legacy IV Estate (B13_)									
2.0 AWD	101	09/03 →	FCP1639	TOKICO					
2.0 AWD	101	09/03 →					FCP1947	AKEBONO	
2.0 AWD	121	06/05 →	FCP1984	AKEBONO					
2.0 AWD	121	06/05 →					FCP1333	AKEBONO	
2.0 AWD	132	06/05 →	FCP1984	AKEBONO					
2.0 AWD	140	06/05 →	FCP1984	AKEBONO					
2.0 D AWD	110	02/08 →	FCP1639	TOKICO					
2.0 D AWD	110	02/08 →					FCP1947	AKEBONO	
2.0 R AWD	110	09/07 →	FCP1984	AKEBONO					
2.0 R AWD	110	09/07 →					FCP1333	AKEBONO	
2.5 AWD	121	09/03 →	FCP1639	TOKICO					
2.5 AWD	121	09/03 →					FCP1947	AKEBONO	
2.5 i AWD	127	01/08 →	FCP1639	TOKICO					
2.5 i AWD	127	01/08 →					FCP1947	AKEBONO	
3.0 R AWD	180	09/03 →	FCP1984	AKEBONO					
3.0 R AWD	180	09/03 →					FCP1333	AKEBONO	
Legacy V									
2.0 D AWD	110	09/09 →	FCP1639	TOKICO					
2.0 D AWD	110	09/09 →					FCP1947	AKEBONO	
2.5 GT AWD	195	07/10 →	FCP1984	AKEBONO					
2.5 GT AWD	195	07/10 →					FCP4187	SUMITOMO	
2.5 i AWD	123	09/09 →	FCP1639	TOKICO					
2.5 i AWD	123	09/09 →					FCP1947	AKEBONO	
3.6 AWD	191	09/10 →					FCP4187	SUMITOMO	
Legacy V Estate									
2.0 D	110	09/09 →	FCP1639	TOKICO					
2.0 D	110	09/09 →					FCP1947	AKEBONO	
2.0 i	110	09/09 →	FCP1639	TOKICO					
2.0 i	110	09/09 →					FCP1947	AKEBONO	
2.5 GT	195	07/10 →	FCP1984	AKEBONO					
2.5 GT	195	07/10 →					FCP4187	SUMITOMO	
2.5 i	123	09/09 →	FCP1639	TOKICO					
2.5 i	123	09/09 →					FCP1947	AKEBONO	
Outback									
2.0 TD		01/01 →	FCP1639	TOKICO					
2.5		01/01 →	FCP1639	TOKICO					
3.0		01/01 →	FCP1639	TOKICO					
Outback (BL, BP)									
2.0 D	110	09/08 → 09/09	FCP1639	TOKICO					
2.0 D	110	09/08 → 09/09					FCP1947	AKEBONO	
2.5	121	11/03 → 09/09	FCP1327	AKEBONO					
2.5	121	11/03 → 09/09	FCP1639	TOKICO					
2.5	121	11/03 → 09/09					FCP1333	AKEBONO	
2.5	121	11/03 → 09/09					FCP1947	AKEBONO	
2.5	127	09/08 → 09/09	FCP1639	TOKICO					
2.5	127	09/08 → 09/09					FCP1947	AKEBONO	
Outback (BM, BR)									
2.0 D	110	09/09 →	FCP1639	TOKICO					
2.0 D	110	09/09 →					FCP1947	AKEBONO	
2.5 i	123	09/09 →	FCP1639	TOKICO					
2.5 i	123	09/09 →					FCP1947	AKEBONO	
3.6 R	191	09/09 →	FCP1984	AKEBONO					
3.6 R	191	09/09 →					FCP1947	AKEBONO	

For material availability see page 16-18 / Per la disponibilità materiali vedere a pagina 16-18

FERODO RACING
Updated on November 2020

	kW				NOTE			NOTE
...SUBARU								
Outback (US)								
2.5		01/01 → 12/04	**FCP1639**	TOKICO				
2.5		01/01 →	**FCP1639**	SUMITOMO				
2.5 Turbo		01/01 →	**FCP1639**	SUMITOMO				
3.0		01/01 →	**FCP1639**	SUMITOMO				
SVX								
3.3 i Coupe	169	01/92 → 12/97				**FCP790**	AKEBONO	
Tribeca (B9)								
3.0	184	01/05 →	**FCP1984**	AKEBONO				
3.0	184	01/05 →				**FCP1333**	AKEBONO	
3.0	180	10/06 →	**FCP1984**	AKEBONO				
3.0	180	10/06 →				**FCP4187**	SUMITOMO	
3.6	188	01/12 →	**FCP1984**	AKEBONO				
3.6	190	09/07 →	**FCP1984**	AKEBONO				
3.6	190	09/07 →				**FCP4187**	SUMITOMO	
SUNBEAM								
Rapier								
		01/59 → 12/67	**FCP823**	LOCKHEED				
Venezia								
		01/64 → 12/65	**FCP823**	LOCKHEED				
SUZUKI								
Swift								
1.0 1.0i		01/98 →	**FCP1459**	BOSCH				
1.3 1.3i		01/98 →	**FCP1459**	BOSCH				
Swift Cup (NZ-Australia)- Tokico Caliper		01/10 →	**FRP3118**	SUMITOMO				
Swift III								
1.3	68	05/05 →	**FCP1617**	LUCAS/TRW				
1.5	75	05/05 →	**FCP1617**	LUCAS/TRW				
1.6	92	05/06 →	**FCP1617**	LUCAS/TRW				
1.6	92	05/06 →				**FCP956**	NISSIN	
1.6 Tokico Caliper	92	05/06 →	**FRP3118**	SUMITOMO				
Swift IV								
1.2	66	10/10 →	**FCP4426**	LUCAS/TRW				
1.2	66	10/10 →				**FCP4430**	AKEBONO	
1.2	69	10/10 →	**FCP4426**	LUCAS/TRW				
1.2	69	10/10 →				**FCP4430**	AKEBONO	
1.2 4x4	66	10/10 →	**FCP4426**	LUCAS/TRW				
1.2 4x4	66	10/10 →				**FCP4430**	AKEBONO	
1.2 4x4	69	10/10 →	**FCP4426**	LUCAS/TRW				
1.2 4x4	69	10/10 →				**FCP4430**	AKEBONO	
1.3 DDiS	55	10/10 →	**FCP4426**	LUCAS/TRW				
1.3 DDiS	55	10/10 →				**FCP4430**	AKEBONO	
1.6	100	01/12 →	**FCP4426**	LUCAS/TRW				
1.6	100	01/12 →				**FCP4430**	AKEBONO	
Swift V (AZ)								
1.4 Sport (ZC33S)	103	09/17 →	**FCP4426**	LUCAS/TRW				
1.4 Sport (ZC33S)	103	09/17 →				**FCP4430**	AKEBONO	

For material availability see page 16-18 / Per la disponibilità materiali vedere a pagina 16-18

	kW				NOTE			NOTE
TALBOT								
1000								
1.0 1000, Rallye I		01/69 → 12/81	FCP3	ATE				
1.0 Rallye II, III		09/72 → 12/81	FCP2	ATE				
1100								
1.1 Not Ti		10/70 → 12/84	FCP3	ATE				
Avenger								
1.2		01/70 → 12/73	FCP809	LUCAS/TRW				
1.3		09/79 → 04/81	FCP810	LUCAS/TRW				
1.3 GT, SW Estate		01/70 → 12/76	FCP810	LUCAS/TRW				
1.5		01/70 → 12/73	FCP809	LUCAS/TRW				
1.6		09/79 → 04/81	FCP810	LUCAS/TRW				
SAMBA (51A)								
0.9	31	01/81 → 12/85	FCP72	BENDIX				
1.1	37	01/81 → 06/86	FCP72	BENDIX				
1.2 Rallye	65	01/83 → 10/86	FCP72	BENDIX				
1.4	44	06/83 → 10/86	FCP72	BENDIX				
1.4	53	01/81 → 06/86	FCP72	BENDIX				
1.4 Rallye	58	01/83 → 10/86	FCP72	BENDIX				
SAMBA Convertible (51E)								
1.4	58	01/81 → 06/86	FCP72	BENDIX				
SIMCA 1000								
1.3 Rallye 2	63	10/76 → 09/77				FCP22	BENDIX	
1.3 Rallye 3	76	01/78 → 12/78				FCP22	BENDIX	
Simca 1301								
1.3	43	01/66 → 12/76	FCP2	ATE				
Simca 1501								
1.5	54	01/66 → 12/76	FCP2	ATE				
Sunbeam								
0.9	33	09/77 → 05/81	FCP810	LUCAS/TRW				
1.3	42, 50	09/77 → 05/81	FCP810	LUCAS/TRW				
1.6	59	09/77 → 05/81	FCP810	LUCAS/TRW				
2.2	110, 114	10/79 → 03/82	FCP810	LUCAS/TRW				
TATRA								
T613								
All		01/78 → 12/95				FCP461	ATE	
T700								
All i		01/95 →				FCP461	ATE	
TESLA								
MODEL S								
60	225	11/13 → 04/15	FRP3067	BREMBO	Not for Performance Brake Sport-pack			
60	225	11/13 → 04/15				FCP1348	BREMBO	
60	283	02/15 → 04/15	FRP3067	BREMBO	Not for Performance Brake Sport-pack			
60	283	02/15 → 04/15				FCP1348	BREMBO	
60	285	06/16 →	FRP3067	BREMBO	Not for Performance Brake Sport-pack			
60	285	06/16 →				FCP1348	BREMBO	
70	235	09/15 →	FRP3067	BREMBO	Not for Performance Brake Sport-pack			
70	235	09/15 →				FCP1348	BREMBO	
70	285	09/15 →	FRP3067	BREMBO	Not for Performance Brake Sport-pack			
70	285	09/15 →				FCP1348	BREMBO	
70D AWD	245	04/15 →	FRP3067	BREMBO	Not for Performance Brake Sport-pack			
70D AWD	245	04/15 →				FCP1348	BREMBO	
70D AWD	386	09/15 →	FRP3067	BREMBO	Not for Performance Brake Sport-pack			
70D AWD	386	09/15 →				FCP1348	BREMBO	
75	285	06/16 →	FRP3067	BREMBO	Not for Performance Brake Sport-pack			
75	285	06/16 →				FCP1348	BREMBO	
75D AWD	386	06/16 →	FRP3067	BREMBO	Not for Performance Brake Sport-pack			
75D AWD	386	06/16 →				FCP1348	BREMBO	
85	270	09/12 → 02/16	FRP3067	BREMBO	Not for Performance Brake Sport-pack			
85	270	09/12 → 02/16				FCP1348	BREMBO	

For material availability see page 16-18 / Per la disponibilità materiali vedere a pagina 16-18

	kW				NOTE			NOTE
...TESLA								
...MODEL S								
85	283	02/15 → 02/16	**FRP3067**	BREMBO	Not for Performance Brake Sport-pack			
85	283	02/15 → 02/16				**FCP1348**	BREMBO	
85	285	09/15 → 02/16	**FRP3067**	BREMBO	Not for Performance Brake Sport-pack			
85	285	09/15 → 02/16				**FCP1348**	BREMBO	
85D AWD	315	04/15 → 02/16	**FRP3067**	BREMBO	Not for Performance Brake Sport-pack			
85D AWD	315	04/15 → 02/16				**FCP1348**	BREMBO	
85D AWD	386	09/15 → 02/16	**FRP3067**	BREMBO	Not for Performance Brake Sport-pack			
85D AWD	386	09/15 → 02/16				**FCP1348**	BREMBO	
90D AWD	310	03/16 →	**FRP3067**	BREMBO	Not for Performance Brake Sport-pack			
90D AWD	310	03/16 →				**FCP1348**	BREMBO	
P100D AWD	568	10/16 →	**FRP3067**	BREMBO	Not for Performance Brake Sport-pack			
P100D AWD	568	10/16 →				**FCP1348**	BREMBO	
P85	310	11/13 → 02/16	**FRP3067**	BREMBO	Not for Performance Brake Sport-pack			
P85	310	11/13 → 02/16				**FCP1348**	BREMBO	
P85D AWD	515	10/14 → 02/16	**FRP3067**	BREMBO	Not for Performance Brake Sport-pack			
P85D AWD	515	10/14 → 02/16				**FCP1348**	BREMBO	
P85D AWD	568	09/15 → 02/16	**FRP3067**	BREMBO	Not for Performance Brake Sport-pack			
P85D AWD	568	09/15 → 02/16				**FCP1348**	BREMBO	
P90D AWD	346	03/16 →	**FRP3067**	BREMBO	Not for Performance Brake Sport-pack			
P90D AWD	346	03/16 →				**FCP1348**	BREMBO	
P90D AWD	397	03/16 →	**FRP3067**	BREMBO	Not for Performance Brake Sport-pack			
P90D AWD	397	03/16 →				**FCP1348**	BREMBO	
TOYOTA								
Alphard								
Alphard 240	125	01/08 →	**FRP3121**					
Alphard 350	206	01/08 →	**FRP3121**					
Alphard I								
2.4	117	09/03 → 04/08	**FRP3120**	AKEBONO				
2.4	96	09/03 → 04/08	**FRP3120**	AKEBONO				
2.4 4WD	117	09/03 → 04/08	**FRP3120**	AKEBONO				
2.4 Hybrid	117	09/03 → 04/08	**FRP3120**	AKEBONO				
2.4 Hybrid 4WD	117	09/03 → 04/08	**FRP3120**	AKEBONO				
2.4 Hybrid 4WD	96	09/03 → 04/08	**FRP3120**	AKEBONO				
3.0	162	09/03 → 04/08	**FRP3120**	AKEBONO				
3.0 4WD	162	09/03 → 04/08	**FRP3120**	AKEBONO				
Aygo								
1.0 GPL	50	07/05 →	**FCP1790**	BOSCH				
1.0 VVTi	50	07/05 →	**FCP1790**	BOSCH				
1.4 D4d	40	07/05 →	**FCP1790**	BOSCH				
Camry								
1.8		01/82 → 12/86	**FCP308**	AKEBONO				
1.8	66	11/86 → 12/89	**FCP308**	AKEBONO				
2.0		10/91 → 12/92	**FCP867**	AKEBONO				
2.0	66	03/83 → 10/86	**FCP308**	AKEBONO				
2.0	73, 79	04/84 → 01/87	**FCP308**	AKEBONO				
2.0 TD	62	04/84 → 10/86	**FCP602**	AKEBONO				
2.0 TD	62	11/86 → 01/88	**FCP602**	AKEBONO				
2.0 TD	62	02/88 → 05/91	**FCP602**	AKEBONO				
2.0 TD Executive	62	01/84 → 12/87	**FCP308**	AKEBONO				
2.2 (SXV10) 16V	100	10/91 → 09/96	**FCP867**	AKEBONO				
2.2 (SXV20) 16V	96	10/96 →	**FCP867**	AKEBONO				
2.5 (VZV21) 24V	118	02/88 → 08/88	**FCP602**	AKEBONO				
2.5 24V	118	03/89 → 09/91	**FCP602**	AKEBONO				
2.5 24V	118	10/91 → 12/92	**FCP867**	AKEBONO				
CAMRY (_V2_)								
2.0 (SV21_)	94	11/86 → 05/91	**FCP602**	AKEBONO				
2.0 Gli 16V (SV21_)	89	11/86 → 05/91	**FCP602**	AKEBONO				
2.0 Turbo-D (CV20_)	62	11/86 → 05/91	**FCP602**	AKEBONO				
2.0 Turbo-D (CV20_)	63	11/88 → 05/91	**FCP602**	AKEBONO				
CAMRY Station Wagon (_V2_)								
2.0 (SV21_)	94	11/86 → 05/91	**FCP602**	AKEBONO				
2.0 GLi 16V (SV21_)	89	11/86 → 02/93	**FCP602**	AKEBONO				
2.0 Turbo-D (CV20_)	62	11/86 → 05/91	**FCP602**	AKEBONO				
2.0 Turbo-D (CV20_)	63	11/88 → 05/91	**FCP602**	AKEBONO				

For material availability see page 16-18 / Per la disponibilità materiali vedere a pagina 16-18

...TOYOTA	kW				NOTE				NOTE
Carina									
1.6 AT151	52, 63	10/83 → 12/88	**FCP308**	AKEBONO					
2.0 D (CT150)		10/83 → 12/88	**FCP308**	AKEBONO					
Carina E									
1.6 (AT190) 16V	73, 85	05/92 → 09/97	**FCP867**	AKEBONO					
1.8 (AT191) 16V	79	01/95 → 12/98	**FCP867**	AKEBONO					
2.0 D (CT190)	54, 62	01/92 → 12/98	**FCP867**	AKEBONO					
2.0 Not GTi 16V	94	05/92 → 09/97	**FCP867**	AKEBONO					
Carina II									
1.6	66	04/84 → 02/88	**FCP308**	AKEBONO					
1.6	66	03/88 → 05/92	**FCP602**	AKEBONO					
1.6	70	04/84 → 02/88	**FCP308**	AKEBONO					
1.6	70	03/88 → 05/92	**FCP602**	AKEBONO					
1.6	77	04/84 → 02/88	**FCP308**	AKEBONO					
1.6	77	03/88 → 05/92	**FCP602**	AKEBONO					
1.8 (ST150)	74	04/84 → 03/88	**FCP308**	AKEBONO					
2.0	88, 94	04/84 → 02/89	**FCP308**	AKEBONO					
2.0	88, 94	03/89 → 05/92	**FCP602**	AKEBONO					
2.0 D (CT170)	54	01/88 → 12/92	**FCP308**	AKEBONO					
Celica									
1.6 AT160 16V	63, 91	01/85 → 12/89	**FCP308**	AKEBONO					
1.6 i	55	01/77 → 12/82	**FCP170**	SUMITOMO					
1.6 i	63	01/77 → 12/82	**FCP170**	SUMITOMO					
1.6 i	79	01/77 → 12/82	**FCP170**	SUMITOMO					
1.6 Sti 16V	77	01/94 → 10/99	**FCP867**	AKEBONO					
1.6 Sti 16V	77, 85	01/90 → 12/94	**FCP308**	AKEBONO					
1.8 16V	85	11/95 → 10/99	**FCP867**	AKEBONO					
1.8 VVTi 16V	105	11/99 →	**FCP1528**	AKEBONO					
2.0	77, 88	11/85 → 01/90	**FCP308**	AKEBONO					
2.0 16V	115	01/90 → 03/94	**FCP602**	AKEBONO					
2.0 16V	118, 136	01/90 → 03/94	**FCP602**	AKEBONO					
2.0 16V	129	03/94 → 10/99	**FCP867**	AKEBONO					
2.0 16V	150	01/90 → 03/94	**FCP602**	AKEBONO					
2.0 GT 16V	115	01/90 → 03/94	**FCP602**	AKEBONO					
2.0 i	65	01/77 → 12/82	**FCP170**	SUMITOMO					
2.0 i	77	01/77 → 12/82	**FCP170**	SUMITOMO					
2.0 i	86	01/77 → 12/82	**FCP170**	SUMITOMO					
CELICA (ZZT23_)									
1.8 16V TS	141	08/99 → 08/02	**FCP1392**	AKEBONO					
1.8 16V TS	141	09/02 → 03/06	**FCP1528**	AKEBONO					
Corolla									
1.3		01/83 → 08/87	**FCP308**	AKEBONO					
1.3 (AE80/EE80)	48, 55	05/83 → 12/88	**FCP308**	AKEBONO					
1.3 (EE101) 16V		08/92 → 04/97	**FCP867**	AKEBONO					
1.3 (EE90)	52, 55	08/87 → 08/92	**FCP308**	AKEBONO					
1.3 i EE101 16V		08/95 → 04/97	**FCP867**	AKEBONO					
1.4 VVTI (E12U)	71	01/02 →	**FCP1573**	LUCAS/TRW					
1.6 (AE101) 16V		08/92 → 04/97	**FCP867**	AKEBONO					
1.6 (AE82)	54, 63	05/83 → 12/88	**FCP308**	AKEBONO					
1.6 (AE92) 16V		01/87 → 12/92	**FCP308**	AKEBONO					
1.6 (AE92) GTI 16V		01/87 → 12/92	**FCP308**	AKEBONO					
1.6 (AE95) 4WD 16V	77	03/88 → 04/91	**FCP308**	AKEBONO					
1.6 (AE95) Not 4WD	77	08/87 → 08/92	**FCP308**	AKEBONO					
1.6 GT (AE82) 16V	85, 91	10/84 → 08/87	**FCP308**	AKEBONO					
1.6 GT (AE82) 16V	91	05/87 → 12/88	**FCP308**	AKEBONO					
1.6 Not GT		01/83 → 05/87	**FCP308**	AKEBONO					
1.6 VVTI (E12U)	81	01/02 →	**FCP1573**	LUCAS/TRW					
1.8 (AE102) 16V		08/92 → 07/95	**FCP867**	AKEBONO					
1.8 D (CE70)		01/83 → 05/87	**FCP308**	AKEBONO					
1.8 D (CE80)		01/83 → 05/87	**FCP308**	AKEBONO					
1.8 D (CE90)		06/87 → 08/92	**FCP308**	AKEBONO					
1.8 D SW Estate		01/90 →	**FCP308**	AKEBONO					
1.8 VVTLI (E12U)	141	01/02 →	**FCP1573**	LUCAS/TRW					
2.0 D (CE100)	54	11/92 → 07/95	**FCP867**	AKEBONO					
Corolla (_E12_)									
1.8 VVTL-i TS (ZZE123)	165	02/05 → 02/07	**FCP1573**	LUCAS/TRW					

For material availability see page 16-18 / Per la disponibilità materiali vedere a pagina 16-18

FERODO RACING
Updated on November 2020

...TOYOTA	kW				NOTE			NOTE
Corolla Verso								
1.4 i VVTi 16V	71	01/02 → 03/04	**FCP1528**	AKEBONO				
1.6 16V	81	01/02 →	**FCP1528**	AKEBONO				
1.6 i VVTi 16V	81	04/04 →	**FCP1528**	AKEBONO				
1.8 16V	99	01/02 →	**FCP1528**	AKEBONO				
2.0 D D4D	66	01/02 →	**FCP1528**	AKEBONO				
Corolla Wagon (__E11_)								
2.0 D-4D	66	09/00 → 10/01	**FCP1573**	LUCAS/TRW				
2.0 D-4D	81	01/02 → 12/06	**FCP1573**	LUCAS/TRW				
Corona								
1.6		01/83 → 12/85	**FCP308**	AKEBONO				
1.8	85	10/83 → 12/85	**FCP308**	AKEBONO				
2.0		10/83 → 12/85	**FCP308**	AKEBONO				
2.0 2000		01/83 →	**FCP308**	AKEBONO				
Cressida								
2.0 i GX71 24V	110	01/84 → 12/88	**FCP170**	SUMITOMO				
2.4 TD LX70/71	66	08/84 → 12/88	**FCP170**	SUMITOMO				
FJ CRUISER (GSJ1_)								
4.0 i V6	200	12/10 →	**FCP1698**	SUMITOMO				
4.0 i V6	200	12/10 →				**FCP1021**	SUMITOMO	
4.0 i V6	203	01/11 →	**FCP1698**	SUMITOMO				
4.0 i V6	203	01/11 →				**FCP1021**	SUMITOMO	
4.0 i V6 4WD	193	12/10 →	**FCP1698**	SUMITOMO				
4.0 VVTi	178	01/06 → 12/11	**FCP1698**	SUMITOMO				
4.0 VVTi 4WD	178	01/06 → 12/11	**FCP1698**	SUMITOMO				
4.0 VVTi 4WD	178	01/06 → 12/11				**FCP1021**	SUMITOMO	
FORTUNER (TGN6_, KUN6_, GGN6_, TGN5_, LAN5_, KUN5_, GGN5_)								
2.5 D-4D 4WD	75	01/09 → 05/15	**FCP1698**	SUMITOMO				
3.0 D 4WD	125	08/09 → 05/15	**FCP1698**	SUMITOMO				
FT-86								
2.0 L	147	03/12 →	**FCP1639**	SUMITOMO				
2.0 L	147	03/12 →				**FCP4187**	SUMITOMO	
GT-86								
2.0 L	147	03/12 →	**FCP1639**	SUMITOMO				
2.0 L	147	03/12 →				**FCP4187**	SUMITOMO	
HIACE								
RZH101G		01/93 → 12/02	**FRP3127**					
RZH102V		01/96 → 12/03	**FRP3127**					
RZH111G		01/95 → 12/02	**FRP3127**					
RZH112K		01/96 → 12/03	**FRP3127**					
RZH112V		01/96 → 12/03	**FRP3127**					
RZH124B		01/96 → 12/03	**FRP3127**					
HIACE / COMMUTER IV (TRH2_, KDH2_)								
2.5 D-4D	75	09/06 →	**FCP4327**	AKEB/SUMI				
2.5 D-4D 4WD	94	01/05 →	**FCP4327**	AKEB/SUMI				
2.7 VVTi	111	01/05 →	**FCP4327**	AKEB/SUMI				
3.0 D	100	01/05 →	**FCP4327**	AKEB/SUMI				
HIACE IV Box (LXH1_, RZH1_, LH1_)								
2.5 D-4D	70	09/06 →	**FCP4327**	AKEB/SUMI				
2.5 D-4D	86	09/06 →	**FCP4327**	AKEB/SUMI				
HIACE IV Box (TRH2_, KDH2_)								
2.5 D-4D	70	09/06 →	**FCP4327**	AKEB/SUMI				
2.5 D-4D	75	09/06 →	**FCP4327**	AKEB/SUMI				
2.5 D-4D	86	09/06 →	**FCP4327**	AKEB/SUMI				
2.7 VVTi (TRH201, TRH221)	111	01/05 →	**FCP4327**	AKEB/SUMI				
3.0 D	100	01/05 →	**FCP4327**	AKEB/SUMI				
HILUX Closed Off-Road Vehicle (RZN1_, LN1_)								
2.7	107	08/01 → 07/04	**FCP1698**	SUMITOMO				
3.4 4WD	131	08/00 → 07/04	**FCP1698**	SUMITOMO				

For material availability see page 16-18 / Per la disponibilità materiali vedere a pagina 16-18

...TOYOTA	kW				NOTE			NOTE
HILUX II Pickup (RN6_, RN5_, LN6_, YN6_, YN5_, LN5_)								
3.4	131	08/01 → 07/05	**FCP1698**	SUMITOMO				
3.4 4WD	131	08/01 → 07/05	**FCP1698**	SUMITOMO				
HILUX III Pickup (TGN1_, GGN2_, LAN_, GGN1_, KUN2_, KUN1_)								
2.5 D-4D	106	01/10 →	**FCP1698**	SUMITOMO				
2.5 D-4D 4WD	106	12/07 →	**FCP1698**	SUMITOMO				
3.0 D 4WD (KUN26)	120	08/05 →	**FCP1698**	SUMITOMO				
3.0 D-4D 4WD	145	05/08 →	**FCP1698**	SUMITOMO				
LAND CRUISER (LJ12_, KDJ12_, KZJ12_, GRJ12_, TRJ12_)								
2.7 (RZJ12)	112	09/02 → 08/04	**FCP1698**	SUMITOMO				
2.7 (RZJ12)	112	09/02 → 08/04				**FCP1021**	SUMITOMO	
2.7 (TRJ12)	120	11/03 → 02/10	**FCP1698**	SUMITOMO				
2.7 (TRJ12)	120	11/03 → 02/10				**FCP1021**	SUMITOMO	
3.0 D	70	09/02 → 07/09	**FCP1698**	SUMITOMO				
3.0 D	70	09/02 → 07/09				**FCP1021**	SUMITOMO	
3.0 D-4D (KDJ120, KDJ125)	127	09/02 →	**FCP1698**	SUMITOMO				
3.0 D-4D (KDJ120, KDJ125)	127	09/02 →				**FCP1021**	SUMITOMO	
3.0 D-4D (KDJ120, KDJ150, KDJ125)	120	01/03 → 02/10	**FCP1698**	SUMITOMO				
3.0 D-4D (KDJ120, KDJ150, KDJ125)	120	01/03 → 02/10				**FCP1021**	SUMITOMO	
3.0 D-4D (KZJ12)	92	09/02 → 02/10	**FCP1698**	SUMITOMO				
3.0 D-4D (KZJ12)	92	09/02 → 02/10				**FCP1021**	SUMITOMO	
3.4	136	09/02 → 08/04	**FCP1698**	SUMITOMO				
4.0	179	09/02 → 08/04	**FCP1698**	SUMITOMO				
4.0	179	09/02 → 08/04				**FCP1021**	SUMITOMO	
4.0 (GRJ12, GRJ125)	183	01/03 →	**FCP1698**	SUMITOMO				
4.0 (GRJ12, GRJ125)	183	01/03 →				**FCP1021**	SUMITOMO	
LAND CRUISER (PZJ7_, KZJ7_, HZJ7_, BJ7_, LJ7_, RJ7_)								
2.4 (RJ70_, RJ73_)	77	11/84 → 05/93				**FCP1021**	SUMITOMO	
2.4 (RJ70_, RJ73_)	81	11/84 → 05/93				**FCP1021**	SUMITOMO	
2.4 (RJ70_V, RJ73_V)	84	12/88 → 12/96				**FCP1021**	SUMITOMO	
2.4 TD (LJ70)	66	01/90 → 05/93				**FCP1021**	SUMITOMO	
2.4 TD (LJ70_, LJ73_)	63	10/85 → 05/90				**FCP1021**	SUMITOMO	
3.0 TD (KZJ70_, KZJ73_, KZJ77_)	92	05/93 → 05/96				**FCP1021**	SUMITOMO	
3.5 D 4x4 (PZJ75, PZJ70)	85	01/90 → 12/94				**FCP1021**	SUMITOMO	
4.2 TD (HZJ7__V)	96	01/90 →	**FCP1456**	SUMITOMO				
4.2 TD (HZJ7__V)	96	01/90 →				**FCP1021**	SUMITOMO	
4.2 TD (HZJ7__V)	96	01/90 →				**FCP1457**	SUMITOMO	
4.5 TD 24V 4x4 (VDJ76, VDJ78)	151	03/07 →	**FCP1456**	SUMITOMO				
LAND CRUISER 100 (FZJ1_, UZJ100)								
4.2 D (HZJ105)	96	03/98 → 10/07	**FCP1456**	SUMITOMO				
4.2 TD (HDJ100_)	150	01/98 →	**FCP1456**	SUMITOMO				
4.2 TD (HDJ100_)	150	01/98 →				**FCP1457**	SUMITOMO	
4.7 (UZJ100)	175	02/02 →	**FCP1456**	SUMITOMO				
4.7 (UZJ100)	175	02/02 →				**FCP1457**	SUMITOMO	
4.7 (UZJ100_)	173	01/98 →	**FCP1456**	SUMITOMO				
4.7 (UZJ100_)	173	01/98 →				**FCP1457**	SUMITOMO	
LAND CRUISER 100 (UZJ100)								
4.2 TDi 24V (HDJ100)	150	01/98 → 07/08	**FCP1456**	SUMITOMO				
LAND CRUISER 150 (KDJ15_, GRJ15_)								
2.7	120	01/10 →	**FCP1456**	SUMITOMO				
2.7	120	01/10 →	**FCP1698**	SUMITOMO				
2.8 D-4D	130	06/15 →	**FCP1456**	SUMITOMO				
2.8 D-4D	130	06/15 →	**FCP1698**	SUMITOMO				
2.8 D-4D	130	06/15 →				**FCP1021**	SUMITOMO	
3.0 D-4D	127	03/10 →	**FCP1456**	SUMITOMO				
3.0 D-4D	127	03/10 →	**FCP1698**	SUMITOMO				
3.0 D-4D	127	03/10 →				**FCP1021**	SUMITOMO	
3.0 D-4D	140	01/10 →	**FCP1456**	SUMITOMO				
3.0 D-4D	140	01/10 →	**FCP1698**	SUMITOMO				
3.0 D-4D	140	01/10 →				**FCP1021**	SUMITOMO	
4.0 V6 Dual VVTi	205	01/10 →	**FCP1456**	SUMITOMO				
4.0 V6 Dual VVTi	205	01/10 →	**FCP1698**	SUMITOMO				
4.0 V6 VVT-i	207	01/10 →	**FCP1456**	SUMITOMO				
4.0 V6 VVT-i	207	01/10 →	**FCP1698**	SUMITOMO				
4.0 V6 VVT-i	207	01/10 →				**FCP1021**	SUMITOMO	
4.0 V6 VVTi	183	01/10 →	**FCP1698**	SUMITOMO				
4.0 V6 VVTi	203	01/10 →	**FCP1698**	SUMITOMO				

For material availability see page 16-18 / Per la disponibilità materiali vedere a pagina 16-18

FERODO RACING
Updated on November 2020

...TOYOTA	kW				NOTE			NOTE
LAND CRUISER 80 (_J8_)								
4.0 (FJ80_)	115	01/90 → 08/92				FCP1021	SUMITOMO	
4.2 D (HZJ80_)	99	01/90 → 12/97				FCP1021	SUMITOMO	
4.2 TD (HDJ80)	118	10/92 → 12/97				FCP1021	SUMITOMO	
4.2 TD (HDJ80)	123	01/90 → 12/97				FCP1021	SUMITOMO	
4.2 TD 24V (HDJ80_)	125	03/95 →				FCP1021	SUMITOMO	
4.5 24V (FZJ80_)	151	08/92 → 12/97				FCP1021	SUMITOMO	
LAND CRUISER 90 (_J9_)								
2.7	110	04/95 → 07/02				FCP1021	SUMITOMO	
3.0 D-4D (KDJ90, KDJ95, KDJ 125)	120	10/00 →				FCP1021	SUMITOMO	
3.0 TD	103	04/95 → 07/00				FCP1021	SUMITOMO	
3.0 TD (KZJ90_, KZJ95_)	92	04/96 →				FCP1021	SUMITOMO	
3.4 i 24V (VZJ90_, VZJ95_)	131	04/96 →				FCP1021	SUMITOMO	
4.7	175	08/02 →	FCP1456	SUMITOMO				
LAND CRUISER Hardtop (_J7_)								
2.4 TD (LJ77)	66	07/90 → 05/96				FCP1021	SUMITOMO	
3.0 TD	92	05/93 → 05/96				FCP1021	SUMITOMO	
4.2 D	123	07/90 → 05/96				FCP1021	SUMITOMO	
LAND CRUISER Pickup (_J7_)								
4.2 TD 4x4 (HZJ7__V)	96	01/90 → 02/07	FCP1456	SUMITOMO				
LAND CRUISER PRADO (LJ12_, KDJ12_, KZJ12_, GRJ12_, TRJ12_)								
3.0 D-4D (KDJ120, KDJ125)	122	08/04 → 02/10	FCP1698	SUMITOMO				
3.0 D-4D (KDJ120, KDJ125)	122	08/04 → 02/10				FCP1021	SUMITOMO	
MR2 I (W1)								
1.6 16V (AW11)	85	11/84 → 06/90	FCP308	AKEBONO				
MR2 III (W3)								
1.8 VT-i 16V	103	05/00 →	FCP1392	AKEBONO				
Paseo								
1.5 16V	66	11/95 → 03/99	FCP308	AKEBONO				
Picnic								
2.0 16V	94	08/96 →	FCP867	AKEBONO				
2.2 TD	66	08/96 →	FCP867	AKEBONO				
PRADO								
3.0 D (GRJ120, KZJ120, RZJ120)	120	01/03 → 12/06	FCP1698	SUMITOMO				
3.0 D (GRJ120, KZJ120, RZJ120)	120	01/03 → 12/06				FCP1021	SUMITOMO	
3.0 TD 2 Door SWB Wagon (KDJ155)		01/09 →	FCP1698					
3.0 TD 2 Door SWB Wagon (KDJ155)		01/09 →				FCP1021		
4.6 V6 Door Wagon (KDJ150, GRJ150)		01/09 →	FCP1698					
4.6 V6 Door Wagon (KDJ150, GRJ150)		01/09 →				FCP1021		
Prius								
1.5 Hybrid	54	05/00 →	FCP1392	AKEBONO				
RAV4								
2.0 i 16V	90	06/94 → 07/00	FCP867	AKEBONO				
SIENNA (_L3_)								
3.5 4WD (GSL35_)	198	01/10 →	FCP4354	ADVICS				
SUPRA (DB41, DB42, DB43)								
3.0 GR	250	03/19 →	FCP5055	BREMBO				
Tercel								
1.3 (AL20)	51	01/82 → 12/84	FCP308	AKEBONO				
1.5	55	01/82 → 04/88	FCP308	AKEBONO				
1.5 4WD	55	01/82 → 12/88	FCP308	AKEBONO				
Vios (_P4_)								
1.3 VVTi (AXP41_)	64	07/02 → 01/08	FCP1368	AKEBONO				
1.5 (AXP42_,NCP42_)	68	07/02 → 01/08	FCP1368	AKEBONO				
1.5 VVTi (AXP42_,NCP42_)	78	07/02 → 01/08	FCP1368	AKEBONO				

For material availability see page 16-18 / Per la disponibilità materiali vedere a pagina 16-18

	kW				NOTE			NOTE
...TOYOTA								
Yaris								
1.0 16V	50	04/99 →	FCP1368	AKEBONO				
1.3		01/06 → 12/13	FCP1394					
1.3 16V	63	04/99 →	FCP1368	AKEBONO				
1.4 D D-4D 16V	55	02/02 →	FCP1392	AKEBONO				
1.5 T-Sport 16V	78	01/01 →	FCP1392	AKEBONO				
YARIS (NHP13_, NSP13_, NCP13_, KSP13_, NLP13_)								
1.3	70	09/11 →	FCP4081	Advics				
1.3	73	09/11 →	FCP4081	Advics				
1.3 4WD	70	12/10 →	FCP4081	Advics				
1.3 VVT-i	63	12/10 →	FCP4081	Advics				
YARIS (SCP9_, NSP9_, KSP9_, NCP9_, ZSP9_)								
1.0 GPL	51	01/06 →	FCP4081	Advics				
1.0 VVT-i	51	08/05 →	FCP4081	Advics				
1.3 4WD	64	08/07 →	FCP4081	Advics				
1.3 VVT-i	64	08/05 →	FCP4081	Advics				
1.3 VVT-i	63	11/05 →	FCP4081	Advics				
1.4 D-4D	66	08/05 →	FCP4081	Advics				
1.5 (NCP91)	80	11/05 →	FCP4081	Advics				
1.8 VVTi	97	11/05 →	FCP4081	Advics				
1.8 VVTi	98	01/07 →	FCP4081	Advics				
Yaris Verso								
1.3 16V	63	09/99 →	FCP1392	AKEBONO				
1.4 D D-4D 16V	55	02/02 →	FCP1392	AKEBONO				
TRIUMPH								
TR4/TR5								
2.2	74	01/62 → 12/69				FCP815	LUCAS/TRW	
TR6								
2.5		01/69 → 12/72				FCP815	LUCAS/TRW	
TVR								
Cerbera								
3.9 16V	176	06/96 →	FCP206	ATE				
3.9 16V	176	06/96 →				FCP408	LUCAS/TRW	
Chimaera								
5.0 16V	240	06/96 →	FCP206	ATE				
5.0 16V	240	06/96 →				FCP408	LUCAS/TRW	
Griffith								
4.3 16V	198	10/93 → 10/94	FCP206	ATE				
4.3 16V	198	10/93 → 10/94				FCP408	LUCAS/TRW	
5.0 16V	240	10/93 →	FCP206	ATE				
5.0 16V	240	10/93 →				FCP408	LUCAS/TRW	
VAUXHALL								
Astra								
1.2	44	09/81 → 08/91	FCP173	GM				
1.3	51, 55	09/81 → 08/91	FCP173	GM				
1.3	51, 55	10/84 → 08/91	FCP173	GM				
1.4	44, 55	10/89 → 08/91	FCP173	GM				
1.4 Saloon/SW Estate	44, 60	09/91 → 02/98	FCP584	ATE	ABS			
1.4 Saloon/SW Estate	44, 60	09/91 → 02/98	FCP732	ATE				
1.6	66	10/84 → 08/91	FCP173	GM				
1.6	52	02/92 → 02/98	FCP584	ATE	ABS			
1.6	52	02/92 → 02/98	FCP732	ATE				
1.6	55	02/92 → 02/98	FCP584	ATE	ABS			
1.6	55	02/92 → 02/98	FCP732	ATE				
1.6	74	02/92 → 02/98	FCP584	ATE	ABS			
1.6	74	02/92 → 02/98	FCP732	ATE				
1.7 D	42	01/89 → 08/91	FCP173	GM				
1.7 TD		09/91 → 02/98	FCP584	ATE	ABS			
1.7 TD		09/91 → 02/98	FCP732	ATE				

For material availability see page 16-18 / Per la disponibilità materiali vedere a pagina 16-18

FERODO RACING
Updated on November 2020

...VAUXHALL

	kW				NOTE			NOTE
...Astra								
1.8		01/92 → 12/98	FCP173	GM				
1.8	81, 85	10/84 → 09/91	FCP173	GM				
1.8	85	01/80 → 10/84	FCP173	GM				
1.8 Cabrio 16V	85	01/97 → 02/98	FCP584	ATE				
1.8 Cabrio 16V	85	01/97 → 02/98				FCP586	ATE	
2.0 GTE	90	03/87 → 08/91	FCP173	GM				
2.0 GTE 16V	110	05/88 → 08/91	FCP584	ATE				
2.0 GTE 16V	110	05/88 → 08/91				FCP586	ATE	
2.0 i GSi 16V	110	09/91 → 02/98	FCP584	ATE				
2.0 i SRi	85	09/91 → 02/98	FCP584	ATE				
Astra (F48)								
2.0 DTi	74	09/00 → 03/05	FCP1520	ATE				
ASTRA (L48)								
2.0 VXR	177	11/05 → 05/09	FCP1520	ATE				
ASTRA Mk IV (G)								
1.2 i 16V	44	02/98 → 03/04	FCP1293	ATE				
1.2 i 16V	44	02/98 → 03/04				FCP1294	BOSCH	
1.6	55	03/98 → 03/04	FCP1293	ATE				
1.6	55	03/98 → 03/04				FCP1294	BOSCH	
1.6	52	03/98 → 03/04	FCP1293	ATE				
1.6	52	03/98 → 03/04				FCP1294	BOSCH	
1.8 16V	85	03/98 → 03/04	FCP1295	ATE	ABS			
1.8 16V	85	03/98 → 03/04				FCP1294	BOSCH	
2.0 16V	85	03/98 → 03/04	FCP1295	ATE	ABS			
2.0 16V	85	03/98 → 03/04				FCP1294	BOSCH	
2.0 TDi 16V	74	03/98 → 03/04	FCP1295	ATE	ABS			
2.0 TDi 16V	74	03/98 → 03/04				FCP1294	BOSCH	
ASTRA Mk IV (G) Convertible								
1.6 16V	74	03/98 → 03/04	FCP1293	ATE				
1.6 16V	74	03/98 → 03/04				FCP1294	BOSCH	
1.6 16V	74	03/01 → 10/05	FCP1293	ATE				
1.6 16V	74	03/01 → 10/05				FCP1521	LUCAS/TRW	
1.6 16V	76	03/03 → 10/05	FCP1293	ATE				
1.6 16V	76	03/03 → 10/05				FCP1521	LUCAS/TRW	
1.8 16V	92	03/01 → 10/05	FCP1293	ATE	256mm disc			
1.8 16V	92	03/01 → 10/05	FCP1295	ATE	280mm disc			
1.8 16V	92	03/01 → 10/05				FCP1521	LUCAS/TRW	
2.0	147	09/02 → 07/06	FCP1068	ATE				
2.0	147	09/02 → 07/06				FCP1521	LUCAS/TRW	
2.0 Turbo	141	03/02 → 10/05	FCP1068	ATE				
2.0 Turbo	141	03/02 → 10/05				FCP1521	LUCAS/TRW	
2.2 16V	108	03/01 → 10/05	FCP1295	ATE				
2.2 16V	108	03/01 → 10/05				FCP1521	LUCAS/TRW	
ASTRA Mk IV (G) Coupe (F67)								
1.6 16V	76	03/00 → 08/05	FCP1293	ATE				
1.6 16V	76	03/00 → 08/05				FCP1521	LUCAS/TRW	
1.8 16V	92	09/00 → 08/05	FCP1293	ATE	256mm disc			
1.8 16V	92	09/00 → 08/05	FCP1295	ATE	280mm disc			
1.8 16V	92	09/00 → 08/05				FCP1521	LUCAS/TRW	
2.0	147	08/02 → 05/05	FCP1068	ATE				
2.0	147	08/02 → 05/05				FCP1521	LUCAS/TRW	
2.0 16V Turbo	140	09/00 → 08/05	FCP1293	ATE	256mm disc			
2.0 16V Turbo	140	09/00 → 08/05	FCP1295	ATE	280mm disc			
2.0 16V Turbo	140	09/00 → 08/05				FCP1521	LUCAS/TRW	
2.2 16V	108	03/00 → 08/05	FCP1295	ATE				
2.2 16V	108	03/00 → 08/05				FCP1521	LUCAS/TRW	
ASTRA Mk IV (G) Estate								
1.4 16V	66	02/98 → 05/05	FCP1293	ATE				
1.4 16V	66	02/98 → 05/05				FCP1521	LUCAS/TRW	
1.4 16V	66	03/98 → 03/04	FCP1293	ATE				
1.4 16V	66	03/98 → 03/04				FCP1294	BOSCH	
1.6	76	12/02 → 05/05	FCP1293	ATE				
1.6	76	12/02 → 05/05				FCP1521	LUCAS/TRW	
1.7 CDTI 16V	59	04/03 → 05/05	FCP1293	ATE				
1.7 CDTI 16V	59	04/03 → 05/05				FCP1521	LUCAS/TRW	
2.2 16V	108	03/01 → 05/05	FCP1295	ATE				
2.2 16V	108	03/01 → 05/05				FCP1521	LUCAS/TRW	

For material availability see page 16-18 / Per la disponibilità materiali vedere a pagina 16-18

...VAUXHALL

	kW				NOTE			NOTE
ASTRA Mk IV (G) Hatchback								
1.7 CDTI 16V	59	04/03 → 05/05	**FCP1293**	ATE				
1.7 CDTI 16V	59	04/03 → 05/05				**FCP1521**	LUCAS/TRW	
1.8 16V	92	09/00 → 05/05	**FCP1293**	ATE	256mm disc			
1.8 16V	92	09/00 → 05/05	**FCP1295**	ATE	280mm disc			
1.8 16V	92	09/00 → 05/05				**FCP1521**	LUCAS/TRW	
1.8 16V Dualfuel	87	09/02 → 05/05	**FCP1293**	ATE	256mm disc			
1.8 16V Dualfuel	87	09/02 → 05/05	**FCP1295**	ATE	280mm disc			
1.8 16V Dualfuel	87	09/02 → 05/05				**FCP1521**	LUCAS/TRW	
2.0	118	10/99 → 08/00	**FCP1068**	ATE				
2.0	118	10/99 → 08/00				**FCP1521**	LUCAS/TRW	
2.0 SRI Turbo	141	07/02 → 05/05	**FCP1295**	ATE				
2.0 SRI Turbo	141	07/02 → 05/05				**FCP1521**	LUCAS/TRW	
2.2 16V	108	03/01 → 05/05	**FCP1295**	ATE				
2.2 16V	108	03/01 → 05/05				**FCP1521**	LUCAS/TRW	
ASTRA Mk IV (G) Saloon								
1.4	44	05/98 → 05/05	**FCP1293**	ATE				
1.4	44	05/98 → 05/05				**FCP1521**	LUCAS/TRW	
2.2 16V	108	03/01 → 05/05	**FCP1295**	ATE				
2.2 16V	108	03/01 → 05/05				**FCP1521**	LUCAS/TRW	
2.2 DTI	92	09/02 → 05/05	**FCP1295**	ATE				
2.2 DTI	92	09/02 → 05/05				**FCP1521**	LUCAS/TRW	
ASTRA Mk V (H) Estate								
1.2	59	08/05 → 10/10	**FCP1640**	ATE				
1.2	59	08/05 → 10/10				**FCP1521**	LUCAS/TRW	
1.3 CDTi	66	08/04 → 03/09	**FCP1640**	ATE				
1.3 CDTi	66	08/04 → 03/09				**FCP1521**	LUCAS/TRW	
1.4	55	08/04 → 10/10	**FCP1640**	ATE				
1.4	55	08/04 → 10/10				**FCP1521**	LUCAS/TRW	
1.4	66	08/04 → 03/09	**FCP1640**	ATE				
1.4	66	08/04 → 03/09				**FCP1521**	LUCAS/TRW	
1.6	132	08/04 → 03/09	**FCP1640**	ATE				
1.6	132	08/04 → 03/09				**FCP1521**	LUCAS/TRW	
1.6	77	08/04 → 03/09	**FCP1640**	ATE				
1.6	77	08/04 → 03/09				**FCP1521**	LUCAS/TRW	
1.6	85	08/04 → 03/09	**FCP1640**	ATE				
1.6	85	08/04 → 03/09				**FCP1521**	LUCAS/TRW	
1.7 CDTI	59	03/04 → 05/09	**FCP1640**	ATE				
1.7 CDTi	74	08/04 → 03/09	**FCP1640**	ATE				
1.7 CDTi	74	08/04 → 03/09				**FCP1521**	LUCAS/TRW	
1.7 CDTi	81	08/04 → 03/09	**FCP1640**	ATE				
1.7 CDTi	81	08/04 → 03/09				**FCP1521**	LUCAS/TRW	
1.7 CDTI	92	02/07 → 10/10	**FCP1640**	ATE				
1.7 CDTI	92	02/07 → 10/10				**FCP1521**	LUCAS/TRW	
1.7 TD	79	08/04 → 03/09	**FCP1640**	ATE				
1.7 TD	79	08/04 → 03/09				**FCP1521**	LUCAS/TRW	
1.8	103	10/04 → 03/09	**FCP1640**	ATE				
1.8	103	10/04 → 03/09				**FCP1521**	LUCAS/TRW	
1.8	92	10/04 → 03/09	**FCP1640**	ATE				
1.8	92	10/04 → 03/09				**FCP1521**	LUCAS/TRW	
1.9 CDTi	110	08/04 → 03/09	**FCP1640**	ATE				
1.9 CDTi	110	08/04 → 03/09				**FCP1521**	LUCAS/TRW	
1.9 CDTi	74	08/04 → 03/09	**FCP1640**	ATE				
1.9 CDTi	74	08/04 → 03/09				**FCP1521**	LUCAS/TRW	
1.9 CDTi	88	08/04 → 03/09	**FCP1640**	ATE				
1.9 CDTi	88	08/04 → 03/09				**FCP1521**	LUCAS/TRW	
2.0 Turbo	125	08/04 → 10/10	**FCP1640**	ATE				
2.0 Turbo	125	08/04 → 10/10				**FCP1521**	LUCAS/TRW	
2.0 Turbo	147	08/04 → 10/10	**FCP1640**	ATE				
2.0 Turbo	147	08/04 → 10/10				**FCP1521**	LUCAS/TRW	
ASTRA Mk V (H) Hatchback								
1.2	59	08/05 → 05/09	**FCP1640**	ATE				
1.2	59	08/05 → 05/09				**FCP1521**	LUCAS/TRW	
1.3 CDTI	66	01/04 → 05/09	**FCP1640**	ATE				
1.3 CDTI	66	01/04 → 05/09				**FCP1521**	LUCAS/TRW	
1.4	55	04/04 → 12/05	**FCP1640**	ATE				
1.4	55	04/04 → 12/05				**FCP1521**	LUCAS/TRW	
1.4	66	01/04 → 05/09	**FCP1640**	ATE				
1.4	66	01/04 → 05/09				**FCP1521**	LUCAS/TRW	
1.6	77	01/04 → 05/09	**FCP1640**	ATE				
1.6	77	01/04 → 05/09				**FCP1521**	LUCAS/TRW	
1.6	85	01/04 → 05/09	**FCP1640**	ATE				
1.6	85	01/04 → 05/09				**FCP1521**	LUCAS/TRW	
1.6 Turbo	132	09/06 →	**FCP1640**	ATE				
1.7 CDTI	59	01/04 → 05/09	**FCP1640**	ATE				

For material availability see page 16-18 / Per la disponibilità materiali vedere a pagina 16-18

FERODO RACING
Updated on November 2020

...VAUXHALL

			kW				NOTE			NOTE
...ASTRA Mk V (H) Hatchback										
1.7 CDTI	59	01/04 → 05/09						FCP1521	LUCAS/TRW	
1.7 CDTI	74	01/04 → 05/09	FCP1640	ATE						
1.7 CDTI	74	01/04 → 05/09						FCP1521	LUCAS/TRW	
1.7 CDTi	81	01/04 → 05/09	FCP1640	ATE						
1.7 CDTi	81	01/04 → 05/09						FCP1521	LUCAS/TRW	
1.7 CDTI	92	02/07 → 09/09	FCP1640	ATE						
1.7 TD	79	01/04 → 05/09	FCP1640	ATE						
1.7 TD	79	01/04 → 05/09						FCP1521	LUCAS/TRW	
1.8	103	01/04 → 05/09	FCP1640	ATE						
1.8	103	01/04 → 05/09						FCP1521	LUCAS/TRW	
1.8	92	01/04 → 05/09	FCP1640	ATE						
1.8	92	01/04 → 05/09						FCP1521	LUCAS/TRW	
1.9 CDTI	110	01/04 → 05/09	FCP1640	ATE						
1.9 CDTI	110	01/04 → 05/09						FCP1521	LUCAS/TRW	
1.9 CDTI	88	01/04 → 05/09	FCP1640	ATE						
1.9 CDTI	88	01/04 → 05/09						FCP1521	LUCAS/TRW	
1.9 CDTI 16V	88	01/04 → 05/09	FCP1640	ATE						
1.9 CDTI 16V	88	01/04 → 05/09						FCP1521	LUCAS/TRW	
2.0 Turbo	125	01/04 → 05/09	FCP1640	ATE						
2.0 Turbo	125	01/04 → 05/09						FCP1521	LUCAS/TRW	
2.0 Turbo	147	01/04 → 05/09	FCP1640	ATE						
2.0 Turbo	147	01/04 → 05/09						FCP1521	LUCAS/TRW	
2.0 Turbo	177	01/04 → 05/09	FCP1640	ATE						
2.0 Turbo	177	01/04 → 05/09						FCP1521	LUCAS/TRW	
ASTRA Mk V (H) Sport Hatch										
1.3 CDTi	66	04/05 → 11/10	FCP1640	ATE						
1.3 CDTi	66	04/05 → 11/10						FCP1521	LUCAS/TRW	
1.4	55	02/05 → 11/10	FCP1640	ATE						
1.4	55	02/05 → 11/10						FCP1521	LUCAS/TRW	
1.4 i 16V	66	03/05 → 11/10	FCP1640	ATE						
1.4 i 16V	66	03/05 → 11/10						FCP1521	LUCAS/TRW	
1.6	132	10/06 → 11/10	FCP1640	ATE						
1.6	132	10/06 → 11/10						FCP1521	LUCAS/TRW	
1.6	77	02/05 → 11/10	FCP1640	ATE						
1.6	77	02/05 → 11/10						FCP1521	LUCAS/TRW	
1.6 i 16V	85	12/06 → 11/10	FCP1640	ATE						
1.6 i 16V	85	12/06 → 11/10						FCP1521	LUCAS/TRW	
1.7 CDTi	74	02/05 → 11/10	FCP1640	ATE						
1.7 CDTi	74	02/05 → 11/10						FCP1521	LUCAS/TRW	
1.7 CDTi	81	02/07 → 11/10	FCP1640	ATE						
1.7 CDTi	81	02/07 → 11/10						FCP1521	LUCAS/TRW	
1.7 CDTI	92	02/07 →	FCP1640	ATE						
1.8	92	02/05 → 11/10	FCP1640	ATE						
1.8	92	02/05 → 11/10						FCP1521	LUCAS/TRW	
1.8 i 16V	103	03/07 → 11/10	FCP1640	ATE						
1.8 i 16V	103	03/07 → 11/10						FCP1521	LUCAS/TRW	
1.9 CDTi	110	02/05 → 11/10	FCP1640	ATE						
1.9 CDTi	110	02/05 → 11/10						FCP1521	LUCAS/TRW	
1.9 CDTi	74	08/05 → 11/10	FCP1640	ATE						
1.9 CDTi	74	08/05 → 11/10						FCP1521	LUCAS/TRW	
1.9 CDTi	88	02/05 → 11/10	FCP1640	ATE						
1.9 CDTi	88	02/05 → 11/10						FCP1521	LUCAS/TRW	
2.0 Turbo	125	02/05 → 11/10	FCP1640	ATE						
2.0 Turbo	125	02/05 → 11/10						FCP1521	LUCAS/TRW	
2.0 VXR	176	02/09 → 11/10	FCP1520	ATE						
2.0 VXR	176	02/09 → 11/10						FCP1521	LUCAS/TRW	
ASTRA Mk VI (J) (P10)										
1.3 CDTI	70	12/09 →	FCP4262	MANDO						
1.4	64	12/09 →	FCP4262	MANDO						
1.4	74	12/09 → 12/16	FCP4262	MANDO						
1.4 Turbo	103	12/09 →	FCP4262	MANDO						
1.4 Turbo	88	08/11 →	FCP4262	MANDO	Disc Diam mm:276					
1.6	85	12/09 →	FCP4262	MANDO	Disc Diam mm:276					
1.7 CDTI	74	10/10 →	FCP4262	MANDO	Disc Diam mm:276					
ASTRA Mk VI (J) Estate (P10)										
1.3 CDTi	70	10/10 →	FCP4262	MANDO	Disc Diam mm:276					
1.4	64	10/10 →	FCP4262	MANDO	Disc Diam mm:276					
1.4	74	10/10 → 12/16	FCP4262	MANDO						
1.4 Turbo	103	10/10 →	FCP4262	MANDO						
1.4 Turbo	88	10/10 →	FCP4262	MANDO						
1.6	85	10/10 →	FCP4262	MANDO	Disc Diam mm:276					

For material availability see page 16-18 / Per la disponibilità materiali vedere a pagina 16-18

	kW				NOTE			NOTE
...VAUXHALL								
ASTRA Mk VI (J) Saloon (P10)								
1.3 CDTI	70	06/12 →	**FCP4262**	MANDO	Disc Diam mm:276			
1.4	74	06/12 →	**FCP4262**	MANDO	Disc Diam mm:276			
1.4 Turbo	103	06/12 →	**FCP4262**	MANDO	Disc Diam mm:276			
1.6	85	06/12 →	**FCP4262**	MANDO	Disc Diam mm:276			
ASTRA Mk VI (J) Sports Tourer								
1.4	64	12/09 →	**FCP4262**	MANDO				
ASTRA TwinTop Mk V (H)								
1.6	132	10/06 → 11/10	**FCP1640**	ATE				
1.6	132	10/06 → 11/10				**FCP1521**	LUCAS/TRW	
1.6	77	09/05 → 11/10	**FCP1640**	ATE				
1.6	77	09/05 → 11/10				**FCP1521**	LUCAS/TRW	
1.6 i 16V	85	10/06 → 11/10	**FCP1640**	ATE				
1.6 i 16V	85	10/06 → 11/10				**FCP1521**	LUCAS/TRW	
1.8	103	05/08 → 11/10	**FCP1640**	ATE				
1.8	103	05/08 → 11/10				**FCP1521**	LUCAS/TRW	
1.8	92	09/05 → 11/10	**FCP1640**	ATE				
1.9 CDTi	110	01/06 → 11/10	**FCP1640**	ATE				
1.9 CDTi	110	01/06 → 11/10				**FCP1521**	LUCAS/TRW	
2.0	125	02/06 → 11/10	**FCP1640**	ATE				
2.0	125	02/06 → 11/10				**FCP1521**	LUCAS/TRW	
2.0 Turbo	147	01/06 → 11/10	**FCP1640**	ATE				
2.0 Turbo	147	01/06 → 11/10				**FCP1521**	LUCAS/TRW	
Astramax								
1.4	44	11/91 → 03/04	**FCP732**	ATE				
1.4	44, 55	09/85 → 10/91	**FCP173**	GM				
1.6		11/91 → 03/04	**FCP732**	ATE				
1.6 D	40, 42	09/85 → 10/91	**FCP173**	GM				
1.7 D	42, 44	11/91 → 03/04	**FCP732**	ATE				
1.7 D 365	42, 44	09/85 → 10/91	**FCP173**	GM				
ASTRAVAN								
1.3	51, 55	07/82 → 09/84	**FCP173**	GM				
1.3	34	10/84 → 10/89	**FCP173**	GM				
1.3	44	10/84 → 10/89	**FCP173**	GM				
1.3	55	10/84 → 10/89	**FCP173**	GM				
1.4	44	09/89 → 10/91	**FCP173**	GM				
1.4	44	11/91 → 03/04	**FCP732**	ATE				
1.4 i	44	06/90 → 10/91	**FCP173**	GM				
1.6	52, 55	11/91 → 08/95	**FCP732**	ATE				
1.6	66	10/84 → 10/91	**FCP173**	GM				
1.7 D	42	01/89 → 10/91	**FCP173**	GM				
ASTRAVAN Mk III (F) (T92)								
1.7 D	44	01/91 → 08/94	**FCP732**	ATE				
1.7 TD	50	01/94 → 08/98	**FCP732**	ATE				
ASTRAVAN Mk IV (G)								
1.7 CDTI	59	04/04 → 08/06	**FCP1640**	ATE				
1.7 CDTI	59	04/04 → 08/06				**FCP1521**	LUCAS/TRW	
1.7 DTI 16V	55	04/01 → 08/06	**FCP1293**	ATE				
1.7 DTI 16V	55	04/01 → 08/06				**FCP1521**	LUCAS/TRW	
1.7 TD	50	03/98 → 03/04	**FCP1293**	ATE				
1.7 TD	50	03/98 → 03/04				**FCP1294**	BOSCH	
1.7 TD	50	08/98 → 08/06	**FCP1293**	ATE				
1.7 TD	50	08/98 → 08/06				**FCP1521**	LUCAS/TRW	
2.0 DI	60	08/98 → 08/06	**FCP1293**	ATE	256mm disc			
2.0 DI	60	08/98 → 08/06	**FCP1295**	ATE	280mm disc			
2.0 DI	60	08/98 → 08/06				**FCP1521**	LUCAS/TRW	
2.0 DTI	74	04/04 → 08/06	**FCP1640**	ATE				
2.0 DTI	74	04/04 → 08/06				**FCP1521**	LUCAS/TRW	
ASTRAVAN Mk V (H)								
1.3 CDTi	66	08/05 →	**FCP1640**	ATE				
1.3 CDTi	66	08/05 →				**FCP1521**	LUCAS/TRW	
1.4 i	66	03/05 →	**FCP1640**	ATE				
1.4 i	66	03/05 →				**FCP1521**	LUCAS/TRW	
1.6	76	03/05 →	**FCP1640**	ATE				
1.6	76	03/05 →				**FCP1521**	LUCAS/TRW	
1.7 CDTi	59	03/05 → 07/06	**FCP1640**	ATE				
1.7 CDTi	59	03/05 → 07/06				**FCP1521**	LUCAS/TRW	
1.7 CDTI	74	03/05 → 11/11	**FCP1640**	ATE				
1.7 CDTI	74	03/05 → 11/11				**FCP1521**	LUCAS/TRW	
1.7 CDTi	81	06/11 → 12/13	**FCP4262**	MANDO				

For material availability see page 16-18 / Per la disponibilità materiali vedere a pagina 16-18

FERODO RACING
Updated on November 2020

...VAUXHALL					NOTE			NOTE
...ASTRAVAN Mk V (H)								
1.7 CDTi	92	11/11 →	FCP4262	MANDO				
1.9 CDTi	110	03/05 → 11/11	FCP1640	ATE				
1.9 CDTi	110	03/05 → 11/11				FCP1521	LUCAS/TRW	
1.9 CDTi	88	03/05 → 11/11	FCP1640	ATE				
1.9 CDTi	88	03/05 → 11/11				FCP1521	LUCAS/TRW	
Belmont								
1.3	55	01/86 → 10/89	FCP173	GM				
1.4	55	10/89 → 06/92	FCP173	GM				
1.6	66	01/86 → 06/92	FCP173	GM				
1.7 D	42	01/89 → 06/92	FCP173	GM				
1.8	85	01/86 → 06/92	FCP173	GM				
Calibra								
2.0	85	09/89 → 12/96	FCP584	ATE				
2.0	85	09/89 → 12/96				FCP586	ATE	
2.0 (Turbo) 16V	150	09/89 → 12/96	FCP685	ATE				
2.0 (Turbo) 16V	150	09/89 → 12/96				FCP586	ATE	
2.5 24V	125	09/89 → 12/96	FCP584	ATE				
2.5 24V	125	09/89 → 12/96				FCP586	ATE	
Carlton								
1.8	55, 66	01/79 → 12/83	FCP116	ATE				
1.8	55, 66	01/79 → 12/83	FCP173	GM				
1.8	55	01/84 → 10/86	FCP173	GM				
1.8	60	01/89 → 08/92	FCP584	ATE				
1.8	65	01/84 → 10/86	FCP173	GM				
1.8	66	01/84 → 10/86	FCP173	GM				
1.8	66	01/89 → 08/92	FCP584	ATE				
1.8	85	01/89 → 08/92	FCP584	ATE				
2.0	81	07/83 → 10/86	FCP173	GM				
2.0	85	01/89 → 04/94	FCP584	ATE				
2.0	85, 90	11/86 → 12/88	FCP173	GM				
2.0	66	01/79 → 12/83	FCP116	ATE				
2.0	66	01/79 → 12/83	FCP173	GM				
2.0	74	01/79 → 12/83	FCP116	ATE				
2.0	74	01/79 → 12/83	FCP173	GM				
2.0	81	01/79 → 12/83	FCP116	ATE				
2.0	81	01/79 → 12/83	FCP173	GM				
2.2	85	08/84 → 08/86	FCP173	GM				
2.3 D		01/84 → 12/88	FCP173	GM				
2.3 D	48	01/79 → 12/88	FCP173	GM				
2.3 TD		11/86 → 12/88	FCP173	GM				
2.3 TD		01/89 → 04/94	FCP584	ATE				
2.6	110	09/90 → 04/94	FCP584	ATE				
3.0 24V	150	03/87 → 12/88	FCP173	GM				
3.0 24V	150	01/89 → 12/90	FCP584	ATE				
3.6 Lotus 24V	280	09/90 → 04/94				FCP825	LOCKHEED	
CARLTON Mk III (V87)								
1.8	65	09/87 → 03/94	FCP173	GM				
1.8 i	85	09/86 → 03/94	FCP173	GM				
1.8 N	60	09/86 → 08/87	FCP173	GM				
1.8 S	66	09/86 → 03/94	FCP173	GM				
CARLTON Mk III Estate (V87)								
1.8	65	09/87 → 03/94	FCP173	GM				
1.8 i	85	09/86 → 03/94	FCP173	GM				
1.8 N	60	09/86 → 08/87	FCP173	GM				
1.8 S	66	09/86 → 03/94	FCP173	GM				
Cavalier								
1.3	42	01/78 → 09/78	FCP116	ATE				
1.3	42	10/78 → 07/81	FCP173	GM				
1.3	44, 55	08/81 → 08/88	FCP173	GM				
1.4	55	10/88 → 09/91	FCP173	GM				
1.4	55	09/91 → 08/92	FCP732	ATE				
1.6		01/84 → 09/91	FCP173	GM				
1.6	55	01/75 → 09/78	FCP116	ATE				
1.6	55	10/78 → 07/81	FCP173	GM				
1.6	66	08/81 → 12/83	FCP173	GM				
1.6	52	09/91 → 12/95	FCP732	ATE				
1.6	55	09/91 → 12/95	FCP732	ATE				
1.6	60	09/91 → 12/95	FCP732	ATE				
1.6 D SW Estate	40	01/84 → 12/85	FCP173	GM				
1.6 D SW Estate	40, 42	01/85 → 08/88	FCP173	GM				

For material availability see page 16-18 / Per la disponibilità materiali vedere a pagina 16-18



kW				NOTE			NOTE
...VAUXHALL							
...Cavalier							
1.7 D	42	09/88 → 09/91	**FCP173**	GM			
1.7 D	42	10/91 → 12/95	**FCP732**	ATE			
1.7 D	42	10/91 → 12/95	**FCP732**	ATE			
1.7 D	44	10/91 → 12/95	**FCP732**	ATE			
1.7 D	60	10/91 → 12/95	**FCP732**	ATE			
1.7 TD	60	10/91 → 12/95	**FCP732**	ATE			
1.8	65, 66	10/89 → 09/91	**FCP173**	GM			
1.8	65, 66	10/91 → 12/95	**FCP732**	ATE			
1.8	68	10/82 → 12/83	**FCP173**	GM			
1.8	68, 85	01/84 → 08/88	**FCP173**	GM			
1.9	62	01/75 → 12/78	**FCP116**	ATE			
2.0		10/88 → 12/95	**FCP584**	ATE			
2.0		10/88 → 12/95			**FCP586**	ATE	
2.0	74	01/78 → 09/78	**FCP116**	ATE			
2.0	74	10/78 → 07/81	**FCP173**	GM			
2.0	102	08/86 → 10/88	**FCP173**	GM			
2.0	110	08/86 → 10/88	**FCP173**	GM			
2.0	92	08/86 → 10/88	**FCP173**	GM			
2.0	95	08/86 → 10/88	**FCP173**	GM			
2.0 4x4	85, 95	01/89 → 12/92	**FCP584**	ATE			
2.0 4x4	85, 95	01/89 → 12/92			**FCP586**	ATE	
2.0 4x4 (Turbo) 16V	150	10/92 → 12/95	**FCP685**	ATE			
2.0 4x4 (Turbo) 16V	150	10/92 → 12/95			**FCP586**	ATE	
2.0 i		01/92 → 12/95	**FCP584**	ATE			
2.0 i		01/92 → 12/95			**FCP586**	ATE	
2.5 24V	125	05/93 → 12/95	**FCP584**	ATE			
2.5 24V	125	05/93 → 12/95	**FCP685**	ATE			
2.5 24V	125	05/93 → 12/95	**FCP1068**	ATE			
2.5 24V	125	05/93 → 12/95			**FCP586**	ATE	
Chevanne							
1.3	39, 42	01/76 → 12/82	**FCP2**	ATE			
Chevette							
1.2	33	01/75 → 12/84	**FCP116**	ATE			
1.2	33	01/75 → 12/84	**FCP2**	ATE			
1.3	37	01/75 → 12/84	**FCP116**	ATE			
1.3	37	01/75 → 12/84	**FCP2**	ATE			
1.3	39	01/75 → 12/84	**FCP116**	ATE			
1.3	39	01/75 → 12/84	**FCP2**	ATE			
1.3	42	01/75 → 12/84	**FCP116**	ATE			
1.3	42	01/75 → 12/84	**FCP2**	ATE			
2.3 HS	80	01/77 → 12/83	**FCP116**	ATE			
COMBO							
1.4	44	10/91 →	**FCP732**	ATE			
1.6		10/91 →	**FCP732**	ATE			
1.7 D	44	10/91 →	**FCP732**	ATE			
COMBO Mk II (C) Box Body / Estate (F25)							
1.3 CDTI 16V	51	09/04 → 02/12	**FCP1640**	ATE			
1.3 CDTI 16V	51	09/04 → 02/12			**FCP1521**	LUCAS/TRW	
1.3 i 16V	55	10/05 → 11/11	**FCP1424**	LUCAS/TRW			
1.3 i 16V	55	10/05 → 11/11	**FCP1640**	ATE			
1.3 i 16V	55	10/05 → 11/11			**FCP1521**	LUCAS/TRW	
1.4 16V	66	09/00 →	**FCP1424**	LUCAS/TRW			
1.4 16V	66	10/01 → 05/07	**FCP1640**	ATE			
1.4 16V	66	10/01 → 05/07			**FCP1521**	LUCAS/TRW	
1.4 i 16V	66	01/04 → 11/11	**FCP1640**	ATE			
1.4 i 16V	66	01/04 → 11/11			**FCP1521**	LUCAS/TRW	
1.6	62	08/01 → 10/04	**FCP1640**	ATE			
1.6	62	08/01 → 10/04			**FCP1521**	LUCAS/TRW	
1.6	64	10/01 → 11/11	**FCP1640**	ATE			
1.6	64	10/01 → 11/11			**FCP1521**	LUCAS/TRW	
1.6 CNG 16V	69	06/06 → 02/12	**FCP1640**	ATE			
1.6 CNG 16V	69	06/06 → 02/12			**FCP1521**	LUCAS/TRW	
1.6 CNG 16V	71	04/05 → 02/12	**FCP1640**	ATE			
1.6 CNG 16V	71	04/05 → 02/12			**FCP1521**	LUCAS/TRW	
1.7 CDTI 16V	74	12/04 → 11/11	**FCP1640**	ATE			
1.7 CDTI 16V	74	12/04 → 11/11			**FCP1521**	LUCAS/TRW	
1.7 Di	48	09/00 →	**FCP1424**	LUCAS/TRW			
1.7 Di	48	09/01 → 11/11	**FCP1640**	ATE			
1.7 Di	48	09/01 → 11/11			**FCP1521**	LUCAS/TRW	
1.7 DTi	55	09/00 →	**FCP1424**	LUCAS/TRW			
1.7 DTi	55	09/00 → 11/11	**FCP1424**	LUCAS/TRW			
1.7 DTi	55	10/01 → 11/11	**FCP1640**	ATE			
1.7 DTi	55	10/01 → 11/11			**FCP1521**	LUCAS/TRW	

For material availability see page 16-18 / Per la disponibilità materiali vedere a pagina 16-18

FERODO RACING
Updated on November 2020

...VAUXHALL	kW				NOTE			NOTE
COMBO TOUR Mk II (C) (F25)								
1.3 CDTI 16V	51	09/04 → 09/06	**FCP1640**	ATE				
1.3 CDTI 16V	55	07/06 → 02/12	**FCP1640**	ATE				
1.4	66	10/04 → 09/10	**FCP1640**	ATE				
1.6	64	10/01 → 06/04	**FCP1640**	ATE				
1.7 DI 16V	48	09/01 → 06/04	**FCP1640**	ATE				
1.7 DTI 16V	55	10/01 → 02/12	**FCP1640**	ATE				
CORSA								
1.0		03/93 → 08/00	**FCP732**	ATE				
1.2		03/93 → 08/00	**FCP732**	ATE				
1.4	40, 44	03/93 → 08/94	**FCP732**	ATE				
1.4 16V		03/93 → 08/00	**FCP732**	ATE				
1.4 SE	60	03/93 → 08/00	**FCP732**	ATE				
1.5 D		03/93 → 08/94	**FCP732**	ATE				
1.5 TD		03/93 → 08/94	**FCP732**	ATE				
1.6 Gsi 16V	78	03/93 → 07/94	**FCP732**	ATE				
1.6 Gsi 16V	80	03/93 → 07/94	**FCP732**	ATE				
1.6 Gsi 16V	95	03/93 → 07/94	**FCP732**	ATE				
1.7 D		03/93 → 08/00	**FCP732**	ATE				
CORSA Mk II (C) (W5L, F08)								
1.0 12V	43	09/00 → 10/03	**FCP1424**	LUCAS/TRW				
1.0 12V	43	09/00 → 10/03				**FCP1521**	LUCAS/TRW	
1.2 16V	55	09/00 → 10/06	**FCP1424**	LUCAS/TRW				
1.2 16V	55	09/00 → 10/06				**FCP1521**	LUCAS/TRW	
1.3 CDTI 16V	55	09/05 → 09/06	**FCP1424**	LUCAS/TRW				
1.3 CDTI 16V	55	09/05 → 09/06				**FCP1521**	LUCAS/TRW	
1.4 i 16V	66	09/00 →	**FCP1424**	LUCAS/TRW				
1.4 Twinport	66	06/03 → 10/06	**FCP1424**	LUCAS/TRW				
1.4 Twinport	66	06/03 → 10/06				**FCP1521**	LUCAS/TRW	
1.7 CDTI 16V	74	08/00 → 09/06	**FCP1640**	ATE				
1.7 DI 16V	48	08/00 → 09/06	**FCP1424**	LUCAS/TRW				
1.7 DI 16V	48	08/00 → 09/06				**FCP1521**	LUCAS/TRW	
1.7 DTI 16V	55	08/00 → 09/06	**FCP1424**	LUCAS/TRW				
1.7 DTI 16V	55	08/00 → 09/06				**FCP1521**	LUCAS/TRW	
1.8 i 16V	92	09/00 →	**FCP1424**	LUCAS/TRW				
CORSA Mk III (D) (L_8)								
1.6 SRi	110	05/07 →	**FCP1640**	ATE				
1.6 SRi	110	05/07 →				**FCP1858**	BOSCH	
1.6 VXR	141	02/07 →	**FCP1640**	ATE				
1.6 VXR	141	02/07 →				**FCP1858**	BOSCH	
1.6 VXR	150	06/11 → 03/12	**FCP1640**	ATE				
1.6 VXR	150	06/11 → 03/12				**FCP1858**	BOSCH	
CORSAVAN								
1.4	44	10/91 →	**FCP732**	ATE				
1.7	42, 44	10/91 →	**FCP732**	ATE				
CORSAVAN Mk II (C)								
1.4	66	11/03 → 06/06	**FCP1424**	LUCAS/TRW				
1.4	66	11/03 → 06/06				**FCP1521**	LUCAS/TRW	
MERIVA Mk I (A)								
1.3 CDTI	51	04/05 → 06/10	**FCP1640**	ATE				
1.3 CDTI	51	04/05 → 06/10				**FCP1521**	LUCAS/TRW	
1.3 CDTI	55	01/03 → 10/09	**FCP1640**	ATE	Rims 15"			
1.3 CDTI	55	01/03 → 10/09				**FCP1521**	LUCAS/TRW	
1.4 16V Twinport	66	01/03 → 10/09	**FCP1640**	ATE	Rims 15"			
1.4 16V Twinport	66	01/03 → 10/09				**FCP1521**	LUCAS/TRW	
1.6 i	64	01/03 → 06/10	**FCP1640**	ATE	Rims 15"			
1.6 i	64	01/03 → 06/10				**FCP1521**	LUCAS/TRW	
1.6 i 16V	74	01/03 → 09/05	**FCP1640**	ATE	Rims 15"			
1.6 i 16V	74	01/03 → 09/05				**FCP1521**	LUCAS/TRW	
1.6 i 16V Twinport	77	05/03 → 06/10	**FCP1640**	ATE	Rims 15"			
1.6 i 16V Twinport	77	05/03 → 06/10				**FCP1521**	LUCAS/TRW	
1.6 Turbo	132	05/06 → 06/10	**FCP1640**	ATE				
1.6 Turbo	132	05/06 → 06/10				**FCP1521**	LUCAS/TRW	
1.7 CDTi	92	08/06 → 06/10	**FCP1640**	ATE				
1.7 CDTi	92	08/06 → 06/10				**FCP1521**	LUCAS/TRW	
1.7 CDTI 16V	74	09/03 → 08/05	**FCP1640**	ATE				
1.7 CDTI 16V	74	09/03 → 08/05				**FCP1521**	LUCAS/TRW	
1.7 DTI 16V	55	06/03 → 06/10	**FCP1640**	ATE				
1.7 DTI 16V	55	06/03 → 06/10				**FCP1521**	LUCAS/TRW	
1.8 i 16V	92	05/03 → 08/05	**FCP1640**	ATE				
1.8 i 16V	92	05/03 → 08/05				**FCP1521**	LUCAS/TRW	

For material availability see page 16-18 / Per la disponibilità materiali vedere a pagina 16-18

...VAUXHALL

	kW				NOTE			NOTE
MERIVA Mk II (B)								
1.3 CDTI	55	06/10 →	**FCP1640**	ATE				
1.3 CDTI	55	06/10 →				**FCP1521**	LUCAS/TRW	
1.3 CDTi	70	06/10 →	**FCP1640**	ATE				
1.3 CDTi	70	06/10 →				**FCP1521**	LUCAS/TRW	
1.4	103	06/10 →	**FCP1640**	ATE				
1.4	103	06/10 →				**FCP1521**	LUCAS/TRW	
1.4	88	06/10 →	**FCP1640**	ATE				
1.4	88	06/10 →				**FCP1521**	LUCAS/TRW	
1.4	74	06/10 →	**FCP1640**	ATE				
1.4	74	06/10 →				**FCP1521**	LUCAS/TRW	
1.4 LPG	88	06/11 →	**FCP1640**	ATE				
1.7 CDTI	74	06/10 →	**FCP1640**	ATE				
1.7 CDTI	74	06/10 →				**FCP1521**	LUCAS/TRW	
1.7 CDTi	81	06/10 →	**FCP1640**	ATE				
1.7 CDTi	81	06/10 →				**FCP1521**	LUCAS/TRW	
1.7 CDTi	96	06/10 →	**FCP1640**	ATE				
1.7 CDTi	96	06/10 →				**FCP1521**	LUCAS/TRW	
Nova								
1.0	33	04/83 → 12/91	**FCP173**	GM				
1.0	33	01/92 → 03/93	**FCP732**	ATE				
1.0 i	33	01/84 → 12/91	**FCP173**	GM				
1.2	33	01/92 → 03/93	**FCP732**	ATE				
1.2	33, 40	04/83 → 12/91	**FCP173**	GM				
1.2 i	33, 40	01/84 → 12/91	**FCP173**	GM				
1.3	44, 51	01/84 → 09/89	**FCP173**	GM				
1.3	51	06/83 → 12/84	**FCP173**	GM				
1.4	44	10/89 → 12/91	**FCP173**	GM				
1.4	44	01/92 → 03/93	**FCP732**	ATE				
1.4	55	10/89 → 12/91	**FCP173**	GM				
1.4	55	01/92 → 03/93	**FCP732**	ATE				
1.4	60	10/89 → 12/91	**FCP173**	GM				
1.4	60	01/92 → 03/93	**FCP732**	ATE				
1.4 i		11/90 → 12/91	**FCP173**	GM				
1.5 D	37, 49	09/89 → 12/91	**FCP173**	GM				
1.5 D	37, 49	01/92 → 03/93	**FCP732**	ATE				
1.6 GSi, GTE	74	01/92 → 03/93	**FCP732**	ATE				
NOVA Hatchback (S83)								
1.6	60	09/88 → 08/90	**FCP173**	GM				
1.6 GSI	72	09/89 → 03/93	**FCP173**	GM				
1.6 GSI	74	05/88 → 03/92	**FCP173**	GM				
Omega								
2.0 16V	100	04/94 →	**FCP685**	ATE				
2.5 V6 24V	125	04/94 →	**FCP685**	ATE				
Royale								
2.8	103	01/78 → 12/84	**FCP11**	ATE				
2.8	103	01/78 → 12/84				**FCP2**	ATE	
3.0	132	01/78 → 12/84	**FCP11**	ATE				
3.0	132	01/78 → 12/84				**FCP2**	ATE	
Senator								
2.5	103	10/84 → 12/85	**FCP11**	ATE				
2.5	103	10/84 → 12/85				**FCP2**	ATE	
3.0	132	10/84 → 12/85	**FCP11**	ATE				
3.0	132	10/84 → 12/85				**FCP2**	ATE	
Signum (F48)								
1.8	103	08/05 → 03/08	**FCP1520**	ATE				
1.8	90	06/03 → 07/05	**FCP1520**	ATE				
1.8	90	06/03 → 07/05				**FCP1540**	ATE	
1.9	74	01/05 → 05/08	**FCP1520**	ATE				
1.9 CDTI	88	04/04 → 03/08	**FCP1520**	ATE				
1.9 CDTI 16V	110	04/04 → 03/08	**FCP1520**	ATE				
2.0 DTi	74	05/03 → 04/04	**FCP1520**	ATE				
2.0 DTi	74	05/03 → 04/04				**FCP1540**	ATE	
2.0 I Turbo	129	09/03 → 03/08	**FCP1520**	ATE				
2.0 I Turbo	129	09/03 → 03/08				**FCP1540**	ATE	
2.2 DGi	114	06/03 → 03/08	**FCP1520**	ATE				
2.2 DGi	114	06/03 → 03/08				**FCP1540**	ATE	
2.2 DTi	92	05/03 → 04/04	**FCP1520**	ATE				
2.2 DTi	92	05/03 → 04/04				**FCP1540**	ATE	
3.0 CDTi	130	06/03 → 07/05	**FCP1520**	ATE				
3.0 CDTi	130	06/03 → 07/05				**FCP1540**	ATE	

For material availability see page 16-18 / Per la disponibilità materiali vedere a pagina 16-18

FERODO RACING
Updated on November 2020

...VAUXHALL	kW				NOTE			NOTE
...Signum (F48)								
3.2 DGi	155	06/03 → 07/05	**FCP1520**	ATE				
3.2 DGi	155	06/03 → 07/05				**FCP1540**	ATE	
Tigra								
1.4 16V	66	09/94 →	**FCP732**	ATE				
1.6 16V	78	09/94 →	**FCP732**	ATE				
Tigra Twin Top								
1.3 CDTi 16v	51	06/04 →	**FCP1424**	LUCAS/TRW				
1.4 i 16V	66	06/04 →	**FCP1424**	LUCAS/TRW				
1.8 i 16V	92	06/04 →	**FCP1424**	LUCAS/TRW				
Vectra								
2.0 16V	100	10/95 → 04/02	**FCP1068**	ATE				
2.5 V6 24V	125	10/95 → 04/02	**FCP1068**	ATE				
Vectra (F19)								
2.6	125	09/00 → 03/02	**FCP1520**	ATE				
Vectra (F35)								
1.6	74	06/04 → 07/08	**FCP1520**	ATE				
1.6	77	10/06 → 08/08	**FCP1520**	ATE				
1.8	103	08/05 → 08/08	**FCP1520**	ATE				
1.8	81	04/02 → 07/08	**FCP1520**	ATE				
1.8	81	04/02 → 07/08				**FCP1540**	ATE	
1.8	90	04/02 → 08/05	**FCP1520**	ATE				
1.8	90	04/02 → 08/05				**FCP1540**	ATE	
1.9 CDTi	110	04/04 → 08/08	**FCP1520**	ATE				
1.9 CDTi	88	04/04 → 08/05	**FCP1520**	ATE				
2.0 DTi	74	04/02 → 08/05	**FCP1520**	ATE				
2.0 DTi	74	04/02 → 08/05				**FCP1540**	ATE	
2.0 Turbo	129	08/03 → 08/08	**FCP1520**	ATE				
2.2 DGi	114	07/03 → 08/08	**FCP1520**	ATE				
2.2 DTi	92	10/03 → 07/08	**FCP1520**	ATE				
2.2 DTi	92	10/03 → 07/08				**FCP1540**	ATE	
2.6	125	09/00 → 03/02	**FCP1520**	ATE				
3.0 CDTi	130	04/02 → 07/05	**FCP1520**	ATE				
3.0 CDTi	130	04/02 → 07/05				**FCP1540**	ATE	
3.2	155	04/02 → 07/05	**FCP1520**	ATE				
3.2	155	04/02 → 07/05				**FCP1540**	ATE	
Vectra (F68)								
1.6	74	06/04 → 07/08	**FCP1520**	ATE				
1.6	77	01/06 → 08/08	**FCP1520**	ATE				
1.8	103	08/05 → 08/08	**FCP1520**	ATE				
1.8	90	08/02 → 07/08	**FCP1520**	ATE				
1.8	90	08/02 → 07/08				**FCP1540**	ATE	
1.8 DualFuel	90	08/02 → 07/08	**FCP1520**	ATE				
1.9 CDTi	110	04/04 → 08/08	**FCP1520**	ATE				
1.9 CDTi	74	08/05 → 08/08	**FCP1520**	ATE				
1.9 CDTi	88	04/04 → 08/05	**FCP1520**	ATE				
2.0 DTi	74	04/02 → 08/05	**FCP1520**	ATE				
2.0 DTi	74	04/02 → 08/05				**FCP1540**	ATE	
2.0 Turbo	129	02/03 → 08/08	**FCP1520**	ATE				
2.2	108	08/02 → 07/08	**FCP1520**	ATE				
2.2	108	08/02 → 07/08				**FCP1540**	ATE	
2.2 DGi	114	04/04 → 08/08	**FCP1520**	ATE				
2.2 DTi	92	04/02 → 07/08	**FCP1520**	ATE				
2.2 DTi	92	04/02 → 07/08				**FCP1540**	ATE	
3.2	155	08/02 → 07/05	**FCP1520**	ATE				
3.2	155	08/02 → 07/05				**FCP1540**	ATE	
Vectra (F69)								
1.6	74	04/02 → 09/05	**FCP1520**	ATE				
1.6	77	08/05 → 08/08	**FCP1520**	ATE				
1.8	103	08/05 → 08/08	**FCP1520**	ATE				
1.8	81	04/02 → 07/08	**FCP1520**	ATE				
1.8	81	04/02 → 07/08				**FCP1540**	ATE	
1.8 DualFuel	90	04/02 → 07/08	**FCP1520**	ATE				
1.8 DualFuel	90	04/02 → 07/08	**FCP1520**	ATE				
1.8 DualFuel	90	04/02 → 07/08				**FCP1540**	ATE	
1.9 CDTi	110	04/04 → 08/08	**FCP1520**	ATE				
1.9 CDTi	74	10/05 → 07/08	**FCP1520**	ATE				
1.9 CDTi	88	04/04 → 09/08	**FCP1520**	ATE				
2.0 DTi	74	04/02 → 08/05	**FCP1520**	ATE				
2.0 DTi	74	04/02 → 08/05				**FCP1540**	ATE	

For material availability see page 16-18 / Per la disponibilità materiali vedere a pagina 16-18

...VAUXHALL	kW				NOTE			NOTE
...Vectra (F69)								
2.0 Turbo	129	02/03 → 08/08	**FCP1520**	ATE				
2.2	108	01/02 → 10/08	**FCP1520**	ATE				
2.2	108	01/02 → 10/08				**FCP1540**	ATE	
2.2 DGi	114	04/04 → 08/08	**FCP1520**	ATE				
2.2 DTi	92	04/02 → 03/04	**FCP1520**	ATE				
2.2 DTi	92	04/02 → 03/04				**FCP1540**	ATE	
3.2	155	08/02 → 07/05	**FCP1520**	ATE				
3.2	155	08/02 → 07/05				**FCP1540**	ATE	
Viceroy								
2.5 24V	125	01/80 → 12/84	**FCP11**	ATE				
Viva								
1.8 1800		01/72 → 12/78	**FCP810**	LUCAS/TRW				
1.8 i 1800		01/73 → 12/78	**FCP810**	LUCAS/TRW				
2.3 2300		01/72 → 12/78	**FCP810**	LUCAS/TRW				
2.3 i 2300		01/73 → 12/78	**FCP810**	LUCAS/TRW				
VX220								
2.2 2.2i	108	10/00 →	**FCP1562**	BREMBO				
2.2 2.2i	108	10/00 →				**FCP1560**	BREMBO	
ZAFIRA (L75)								
2.0 VXR	177	11/05 →	**FCP1520**	ATE				
ZAFIRA Mk I (A) (F75)								
1.6 16V	74	04/99 →	**FCP1295**	ATE				
1.6 16V	74	04/99 → 08/05	**FCP1295**	ATE				
1.6 16V	74	04/99 →				**FCP1294**	BOSCH	
1.6 16V	74	04/99 → 08/05				**FCP1521**	LUCAS/TRW	
1.8 16V	85	04/99 →	**FCP1295**	ATE				
1.8 16V	85	04/99 →				**FCP1294**	BOSCH	
1.8 16V	85	05/99 → 08/00	**FCP1295**	ATE				
1.8 16V	85	05/99 → 08/00				**FCP1521**	LUCAS/TRW	
1.8 16V	92	09/00 → 08/05	**FCP1295**	ATE				
1.8 16V	92	09/00 → 08/05				**FCP1521**	LUCAS/TRW	
1.8 Dualfuel	92	09/00 → 08/05	**FCP1295**	ATE				
1.8 Dualfuel	92	09/00 → 08/05				**FCP1521**	LUCAS/TRW	
2.0	147	06/02 → 06/05	**FCP1068**	ATE				
2.0	147	06/02 → 06/05				**FCP1521**	LUCAS/TRW	
2.0 DI 16V	60	02/99 →	**FCP1295**	ATE				
2.0 DI 16V	60	02/99 →				**FCP1294**	BOSCH	
2.0 DI 16V	60	10/99 → 08/05	**FCP1295**	ATE				
2.0 DI 16V	60	10/99 → 08/05				**FCP1521**	LUCAS/TRW	
2.0 DTi 16V	74	04/99 → 08/05	**FCP1295**	ATE				
2.0 DTi 16V	74	04/99 → 08/05				**FCP1521**	LUCAS/TRW	
2.0 DTi 16V	74	07/00 →	**FCP1295**	ATE				
2.0 DTi 16V	74	07/00 →				**FCP1294**	BOSCH	
2.0 GSI Turbo	141	09/01 → 06/05	**FCP1068**	ATE				
2.0 GSI Turbo	141	09/01 → 06/05				**FCP1521**	LUCAS/TRW	
2.2 16V	108	11/98 → 08/04	**FCP1295**	ATE				
2.2 16V	108	11/98 → 08/04				**FCP1521**	LUCAS/TRW	
2.2 D	92	06/01 → 06/05	**FCP1295**	ATE				
2.2 D	92	06/01 → 06/05				**FCP1521**	LUCAS/TRW	
ZAFIRA Mk II (B) (M75)								
1.6	77	07/05 →	**FCP1640**	ATE				
1.6	77	07/05 →				**FCP1521**	LUCAS/TRW	
1.6	85	12/07 →	**FCP1640**	ATE				
1.6	85	12/07 →				**FCP1521**	LUCAS/TRW	
1.6 CNG	69	07/05 →	**FCP1640**	ATE				
1.6 CNG	69	07/05 →				**FCP1521**	LUCAS/TRW	
1.6 CNG Turbo	110	02/09 →	**FCP1640**	ATE				
1.6 CNG Turbo	110	02/09 →				**FCP1521**	LUCAS/TRW	
1.7 CDTI	81	04/09 →	**FCP1640**	ATE				
1.7 CDTI	81	04/09 →				**FCP1521**	LUCAS/TRW	
1.7 CDTI	92	01/08 →	**FCP1640**	ATE				
1.7 CDTI	92	01/08 →				**FCP1521**	LUCAS/TRW	
1.8	103	04/05 →	**FCP1640**	ATE				
1.8	103	04/05 →				**FCP1521**	LUCAS/TRW	
1.9 CDTI	110	07/05 →	**FCP1640**	ATE				
1.9 CDTI	110	07/05 →				**FCP1521**	LUCAS/TRW	
1.9 CDTI	74	07/05 →	**FCP1640**	ATE				
1.9 CDTI	74	07/05 →				**FCP1521**	LUCAS/TRW	
1.9 CDTI	88	07/05 →	**FCP1640**	ATE				
1.9 CDTI	88	07/05 →				**FCP1521**	LUCAS/TRW	

For material availability see page 16-18 / Per la disponibilità materiali vedere a pagina 16-18

FERODO RACING
Updated on November 2020

			kW				NOTE			NOTE
...VAUXHALL										
...ZAFIRA Mk II (B) (M75)										
2.0		147	07/05 →	FCP1640	ATE					
2.0		147	07/05 →				FCP1521	LUCAS/TRW		
2.0		176	01/06 →	FCP1640	ATE					
2.0		176	01/06 →				FCP1521	LUCAS/TRW		
2.2		110	07/05 →	FCP1640	ATE					
2.2		110	07/05 →				FCP1521	LUCAS/TRW		
VOLKSWAGEN										
1600										
1.6 TA, TE, Variant			01/72 → 12/73	FCP2	ATE					
411										
1.7			01/67 → 12/73	FCP2	ATE					
Beetle										
1.8 (Turbo) 20V			01/98 →	FCP590	ATE					
1.8 (Turbo) 20V			01/98 →	FCP1094	ATE					
1.8 (Turbo) 20V			01/98 →				FCP541	LUCAS/TRW		
1.8 i Turbo 20V			10/99 →	FCP1094	ATE					
1.9 TDi			01/98 →	FCP1094	ATE					
1.9 TDi			01/98 →				FCP541	LUCAS/TRW		
2.0			01/98 →	FCP1094	ATE					
2.0			01/98 →				FCP541	LUCAS/TRW		
2.0 i			01/98 →	FCP1094	ATE					
2.3 V5 20V			01/98 →	FCP590	ATE					
2.3 V5 20V			01/98 →				FCP541	LUCAS/TRW		
BORA (1J2)										
1.4 16V		55	03/00 → 05/05	FCP1094	ATE					
1.4 16V		55	03/00 → 05/05				FCP1491	LUCAS/TRW		
1.6		74	10/98 →	FCP1094	ATE					
1.6		74	10/98 →				FCP1491	LUCAS/TRW		
1.6		75	08/00 → 05/05	FCP1094	ATE					
1.6		75	08/00 → 05/05				FCP1491	LUCAS/TRW		
1.6		78	06/02 → 10/04	FCP1094	ATE					
1.6		78	06/02 → 10/04				FCP1491	LUCAS/TRW		
1.6 16V		77	05/00 → 05/05	FCP1094	ATE					
1.6 16V		77	05/00 → 05/05				FCP1491	LUCAS/TRW		
1.6 FSI		81	01/02 → 05/05	FCP590	ATE	PR 1LE-1LJ-1LN-1ZD-1ZE				
1.6 FSI		81	01/02 → 05/05	FCP1094	ATE	PR 1LQ-1LR-1LS-1ZM-1ZP				
1.6 FSI		81	01/02 → 05/05				FCP1491	LUCAS/TRW		
1.8		92	10/98 → 05/05	FCP590	ATE	PR 1LJ-1LE-1ZE(da ChJY000001),1ZD(da ChJ1000001)				
1.8		92	10/98 → 05/05	FCP1094	ATE	PR 1LQ-1LS-1ZM(To Ch.No. 1JX800000)				
1.8		92	10/98 → 05/05				FCP1491	LUCAS/TRW		
1.8 4motion		92	02/99 → 05/05	FCP590	ATE	PR 1LJ-1LE-1ZE(da ChJY000001),1ZD(da ChJ1000001)				
1.8 4motion		92	02/99 → 05/05	FCP1094	ATE	PR 1LQ-1LS-1ZM(To Ch.No. 1JX800000)				
1.8 4motion		92	02/99 → 05/05				FCP1491	LUCAS/TRW		
1.8 T		110	05/00 → 05/05	FCP590	ATE					
1.8 T		110	05/00 → 05/05				FCP1491	LUCAS/TRW		
1.8 T		132	03/02 → 05/05	FCP590	ATE					
1.8 T		132	03/02 → 05/05				FCP1491	LUCAS/TRW		
1.9 SDI		50	10/98 → 05/05	FCP590	ATE	PR 1LJ-1LE-1ZE(da ChJY000001),1ZD(da ChJ1000001)				
1.9 SDI		50	10/98 → 05/05	FCP1094	ATE	PR 1LQ-1LR-1LS-1ZM(To Ch.No. 1JX800000)				
1.9 SDI		50	10/98 → 05/05				FCP1491	LUCAS/TRW		
1.9 TDI		110	05/00 → 05/05	FCP590	ATE					
1.9 TDI		110	05/00 → 05/05				FCP1491	LUCAS/TRW		
1.9 TDI		66	10/98 → 06/01	FCP590	ATE	PR 1LJ-1LE-1ZE(da ChJY000001),1ZD(da ChJ1000001)				
1.9 TDI		66	10/98 → 06/01	FCP1094	ATE	PR 1LQ-1LR-1LS-1ZM(To Ch.No. 1JX800000)				
1.9 TDI		66	10/98 → 06/01				FCP1491	LUCAS/TRW		
1.9 TDI		74	09/00 → 05/05	FCP590	ATE	PR 1LE-1LJ-1ZE&PR 1ZD(From Ch.No. 1J1000001)				
1.9 TDI		74	09/00 → 05/05	FCP1094	ATE	PR 1LQ-1LS-1ZM-1ZP				
1.9 TDI		74	09/00 → 05/05				FCP1491	LUCAS/TRW		
1.9 TDI		81	10/98 → 06/01	FCP590	ATE	PR 1LJ-1LE-1ZE(da ChJY000001),1ZD(da ChJ1000001)				
1.9 TDI		81	10/98 → 06/01	FCP1094	ATE	PR 1LQ-1LR-1LS-1ZM(To Ch.No. 1JX800000)				
1.9 TDI		81	10/98 → 06/01				FCP1491	LUCAS/TRW		
1.9 TDI		85	12/98 → 01/02	FCP590	ATE	PR 1LJ-1LE-1ZE(da ChJY000001),1ZD(da ChJ1000001)				
1.9 TDI		85	12/98 → 01/02	FCP1094	ATE	PR 1LQ-1LR-1LS-1ZM(To Ch.No. 1JX800000)				
1.9 TDI		85	12/98 → 01/02				FCP1491	LUCAS/TRW		
1.9 TDI		96	11/00 → 05/05	FCP590	ATE					
1.9 TDI		96	11/00 → 05/05				FCP1491	LUCAS/TRW		
1.9 TDI 4motion		110	05/00 → 05/05	FCP590	ATE					
1.9 TDI 4motion		110	05/00 → 05/05				FCP1491	LUCAS/TRW		
1.9 TDI 4motion		66	02/99 → 06/01	FCP590	ATE	PR 1LJ-1LE-1ZE(da ChJY000001),1ZD(da ChJ1000001)				
1.9 TDI 4motion		66	02/99 → 06/01	FCP1094	ATE	PR 1LQ-1LR-1LS-1ZM(To Ch.No. 1JX800000)				

For material availability see page 16-18 / Per la disponibilità materiali vedere a pagina 16-18

...VOLKSWAGEN					NOTE			NOTE
...BORA (1J2)								
1.9 TDI 4motion	66	02/99 → 06/01				FCP1491	LUCAS/TRW	
1.9 TDI 4motion	74	09/00 → 05/05	FCP590	ATE	PR 1LE-1LJ-1ZE&PR 1ZD(From Ch.No. 1J1000001)			
1.9 TDI 4motion	74	09/00 → 05/05	FCP1094	ATE	PR 1LQ-1LS-1ZF-1ZM(From Ch.No. 1JY000001)			
1.9 TDI 4motion	74	09/00 → 05/05				FCP1491	LUCAS/TRW	
1.9 TDI 4motion	85	02/99 → 06/01	FCP590	ATE	PR 1LJ-1LE-1ZE(da ChJY000001),1ZD(da ChJ1000001)			
1.9 TDI 4motion	85	02/99 → 06/01	FCP1094	ATE	PR 1LQ-1LR-1LS-1ZM(To Ch.No. 1JX800000)			
1.9 TDI 4motion	85	02/99 → 06/01				FCP1491	LUCAS/TRW	
1.9 TDI 4motion	96	11/00 → 05/05	FCP590	ATE				
1.9 TDI 4motion	96	11/00 → 05/05				FCP1491	LUCAS/TRW	
2.0	85	10/98 → 05/05	FCP590	ATE	PR 1LJ-1LE-1ZE(da ChJY000001),1ZD(da ChJ1000001)			
2.0	85	10/98 → 05/05	FCP1094	ATE	PR 1LQ-1LR-1LS-1ZM(To Ch.No. 1JX800000)			
2.0	85	10/98 → 05/05				FCP1491	LUCAS/TRW	
2.0 4motion	85	04/00 → 05/05	FCP590	ATE	PR 1LJ-1LE-1ZE(da ChJY000001),1ZD(da ChJ1000001)			
2.0 4motion	85	04/00 → 05/05	FCP1094	ATE	PR 1LQ-1LR-1LS-1ZM(To Ch.No. 1JX800000)			
2.0 4motion	85	04/00 → 05/05				FCP1491	LUCAS/TRW	
2.3 V5	110	10/98 → 10/00	FCP590	ATE				
2.3 V5	110	10/98 → 10/00				FCP1491	LUCAS/TRW	
2.3 V5	125	10/00 → 05/05	FCP590	ATE				
2.3 V5	125	10/00 → 05/05				FCP1491	LUCAS/TRW	
2.3 V5 4motion	110	12/98 → 10/00	FCP590	ATE				
2.3 V5 4motion	110	12/98 → 10/00				FCP1491	LUCAS/TRW	
2.3 V5 4motion	125	10/00 → 05/05	FCP590	ATE				
2.3 V5 4motion	125	10/00 → 05/05				FCP1491	LUCAS/TRW	
2.8 V6 4Motion	150	03/99 → 05/05	FCP590	ATE				
2.8 V6 4Motion	150	03/99 → 05/05				FCP1491	LUCAS/TRW	
BORA Estate (1J6)								
1.4 16V	55	09/01 → 05/05	FCP1094	ATE				
1.4 16V	55	09/01 → 05/05				FCP1491	LUCAS/TRW	
1.6	74	05/99 → 05/05	FCP1094	ATE				
1.6	74	05/99 → 05/05				FCP1491	LUCAS/TRW	
1.6	75	08/00 → 05/05	FCP1094	ATE				
1.6	75	08/00 → 05/05				FCP1491	LUCAS/TRW	
1.6 16V	77	02/00 → 05/05	FCP1094	ATE				
1.6 16V	77	02/00 → 05/05				FCP1491	LUCAS/TRW	
1.6 FSI	81	01/02 → 05/05	FCP590	ATE	PR 1LE-1LJ-1ZD-1ZE			
1.6 FSI	81	01/02 → 05/05	FCP1094	ATE	PR 1LQ-1LS-1ZF-1ZM-1ZP			
1.6 FSI	81	01/02 → 05/05				FCP1491	LUCAS/TRW	
1.8 4motion	92	05/99 → 05/05	FCP590	ATE	PR 1LJ-1LE-1ZE(da ChJY000001),1ZD(da ChJ1000001)			
1.8 4motion	92	05/99 → 05/05	FCP1094	ATE	PR 1LQ-1LR-1LS-1ZM(To Ch.No. 1JX800000)			
1.8 4motion	92	05/99 → 05/05				FCP1491	LUCAS/TRW	
1.8 T	110	05/00 → 05/05	FCP590	ATE				
1.8 T	110	05/00 → 05/05				FCP1491	LUCAS/TRW	
1.8 T	132	05/02 → 05/05	FCP590	ATE				
1.8 T	132	05/02 → 05/05				FCP1491	LUCAS/TRW	
1.9 TDI	110	05/01 → 05/05	FCP590	ATE				
1.9 TDI	110	05/01 → 05/05				FCP1491	LUCAS/TRW	
1.9 TDI	66	07/04 → 05/05	FCP590	ATE	PR 1LJ-1LE-1ZE(da ChJY000001),1ZD(da ChJ1000001)			
1.9 TDI	66	07/04 → 05/05	FCP1094	ATE	PR 1LQ-1LR-1LS-1ZM(To Ch.No. 1JX800000)			
1.9 TDI	66	07/04 → 05/05				FCP1491	LUCAS/TRW	
1.9 TDI	74	09/00 → 05/05	FCP590	ATE	PR 1LJ-1LE-1ZE(da ChJY000001),1ZD(da ChJ1000001)			
1.9 TDI	74	09/00 → 05/05	FCP1094	ATE	PR 1LQ-1LR-1LS-1ZM(To Ch.No. 1JX800000)			
1.9 TDI	74	09/00 → 05/05				FCP1491	LUCAS/TRW	
1.9 TDI	81	05/99 → 06/01	FCP590	ATE	PR 1LJ-1LE-1ZE(da ChJY000001),1ZD(da ChJ1000001)			
1.9 TDI	81	05/99 → 06/01	FCP1094	ATE	PR 1LQ-1LR-1LS-1ZM(To Ch.No. 1JX800000)			
1.9 TDI	81	05/99 → 06/01				FCP1491	LUCAS/TRW	
1.9 TDI	85	05/99 → 06/01	FCP590	ATE	PR 1LJ-1LE-1ZE(da ChJY000001),1ZD(da ChJ1000001)			
1.9 TDI	85	05/99 → 06/01	FCP1094	ATE	PR 1LQ-1LR-1LS-1ZM(To Ch.No. 1JX800000)			
1.9 TDI	85	05/99 → 06/01				FCP1491	LUCAS/TRW	
1.9 TDI	96	11/00 → 05/05	FCP590	ATE				
1.9 TDI	96	11/00 → 05/05				FCP1491	LUCAS/TRW	
1.9 TDI 4motion	110	05/01 → 05/05	FCP590	ATE				
1.9 TDI 4motion	110	05/01 → 05/05				FCP1491	LUCAS/TRW	
1.9 TDI 4motion	74	09/00 → 05/05	FCP590	ATE	PR 1LJ-1LE-1ZE(da ChJY000001),1ZD(da ChJ1000001)			
1.9 TDI 4motion	74	09/00 → 05/05	FCP1094	ATE	PR 1LQ-1LR-1LS-1ZM(To Ch.No. 1JX800000)			
1.9 TDI 4motion	74	09/00 → 05/05				FCP1491	LUCAS/TRW	
1.9 TDI 4motion	85	05/99 → 06/01	FCP590	ATE	PR 1LJ-1LE-1ZE(da ChJY000001),1ZD(da ChJ1000001)			
1.9 TDI 4motion	85	05/99 → 06/01	FCP1094	ATE	PR 1LQ-1LR-1LS-1ZM(To Ch.No. 1JX800000)			
1.9 TDI 4motion	85	05/99 → 06/01				FCP1491	LUCAS/TRW	
1.9 TDI 4motion	96	11/00 → 05/05	FCP590	ATE				
1.9 TDI 4motion	96	11/00 → 05/05				FCP1491	LUCAS/TRW	
2.0	85	05/99 → 05/05	FCP590	ATE	PR 1LJ-1LE-1ZE(da ChJY000001),1ZD(da ChJ1000001)			
2.0	85	05/99 → 05/05	FCP1094	ATE	PR 1LQ-1LR-1LS-1ZM(To Ch.No. 1JX800000)			
2.0	85	05/99 → 05/05				FCP1491	LUCAS/TRW	
2.0 4motion	85	04/00 → 05/05	FCP590	ATE	PR 1LE-1LJ-1ZE&PR 1ZD(From Ch.No. 1J1000001)			
2.0 4motion	85	04/00 → 05/05	FCP1094	ATE	PR 1LQ-1LS-1ZF-1ZM-1ZP			
2.0 4motion	85	04/00 → 05/05				FCP1491	LUCAS/TRW	

For material availability see page 16-18 / Per la disponibilità materiali vedere a pagina 16-18

FERODO RACING
Updated on November 2020

...VOLKSWAGEN

		kW				NOTE			NOTE
...BORA Estate (1J6)									
2.0 4motion	88	12/99 → 05/03	FCP1094	ATE					
2.0 4motion	88	12/99 → 05/03					FCP1491	LUCAS/TRW	
2.3 V5	110	05/99 → 10/00	FCP590	ATE					
2.3 V5	110	05/99 → 10/00					FCP1491	LUCAS/TRW	
2.3 V5	125	10/00 → 05/05	FCP590	ATE					
2.3 V5	125	10/00 → 05/05					FCP1491	LUCAS/TRW	
2.3 V5 4motion	110	05/99 → 10/00	FCP590	ATE					
2.3 V5 4motion	110	05/99 → 10/00					FCP1491	LUCAS/TRW	
2.3 V5 4motion	125	10/00 → 05/05	FCP590	ATE					
2.3 V5 4motion	125	10/00 → 05/05					FCP1491	LUCAS/TRW	
2.8 V6 4motion	150	05/99 → 05/05	FCP590	ATE					
2.8 V6 4motion	150	05/99 → 05/05					FCP1491	LUCAS/TRW	
2.8 VR6	150	03/00 → 05/00	FCP590	ATE					
2.8 VR6	150	03/00 → 05/00					FCP1491	LUCAS/TRW	
Caddy									
1.4 (CH No ->TR513)	44	01/96 →	FCP775	LUCAS/TRW					
1.4 (CH No TR514->)	44	04/96 →	FCP1312	LUCAS/TRW					
1.5	51	08/82 → 07/83	FCP419	KELGATE					
1.6	55	01/84 → 12/93	FCP419	KELGATE					
1.6 (CH No ->TR513)	55	01/96 → 12/00	FCP775	LUCAS/TRW					
1.6 (CH No TR514->)	55	04/96 → 12/00	FCP1312	LUCAS/TRW					
1.7 SD (CH No ->TR513)		01/96 → 12/00	FCP775	LUCAS/TRW					
1.7 SD (CH No TR514->)		04/96 → 12/00	FCP1312	LUCAS/TRW					
1.8	70	01/84 → 12/93	FCP419	KELGATE					
1.9 SDi (CH No ->TR513)		01/96 → 12/00	FCP775	LUCAS/TRW					
1.9 SDi (CH No TR514->)		04/96 → 12/00	FCP1312	LUCAS/TRW					
Caddy (II)									
1.4 i Ch.->TR513	44	01/96 → 02/04	FCP775	LUCAS/TRW					
1.4 i Ch.TR514->	44	04/96 → 02/04	FCP1312	LUCAS/TRW					
1.6 i Ch.->TR513	55	01/96 → 02/04	FCP775	LUCAS/TRW					
1.6 i Ch.TR514->	55	04/96 → 02/04	FCP1312	LUCAS/TRW					
1.7 SD Ch.->TR513		01/96 → 02/04	FCP775	LUCAS/TRW					
1.7 SD Ch.TR514->		04/96 → 02/04	FCP1312	LUCAS/TRW					
1.9 SDi Ch.->TR513		01/96 → 02/04	FCP775	LUCAS/TRW					
1.9 SDi Ch.TR514->		04/96 → 02/04	FCP1312	LUCAS/TRW					
Caddy (III)									
1.4 i Life, Van	55	03/04 →	FCP1094	ATE					
1.6 i Life, Van	75	03/04 →	FCP1641	ATE					
1.9 TDi Life, Van	77	03/04 →	FCP1641	ATE					
2.0 SDi Life, Van	51	03/04 →	FCP1641	ATE					
2.0 TDi 16v (2CA,2CB)	81	10/10 →	FCP1094	ATE	PR 1ZF				
2.0 TDi 16v (2CA,2CB)	81	10/10 →	FCP1641	ATE	PR 1ZE, 1ZA				
2.0 TDi 16v (2CA,2CB)	81	10/10 →					FCP4316	BOSCH	
2.0 TDi 16v (2CA,2CB)	81	10/10 →					FCP4316	BOSCH	
Caddy (IV)									
2.0 TDi 16v (2CA,2CB)	103	11/10 →	FCP1094	ATE	PR 1ZF				
2.0 TDi 16v (2CA,2CB)	103	11/10 →	FCP1641	ATE	PR 1ZE,1ZA				
2.0 TDi 16v (2CA,2CB)	103	11/10 →					FCP4316	BOSCH	
2.0 TDi 16v (2CA,2CB)	103	11/10 →					FCP4316	BOSCH	
Caddy Maxi (IV)									
2.0 TDi 16v (2CH,2CJ)	103	11/10 →	FCP1094	ATE	PR 1ZF				
2.0 TDi 16v (2CH,2CJ)	103	11/10 →	FCP1641	ATE	PR 1ZE, 1ZA				
2.0 TDi 16v (2CH,2CJ)	103	11/10 →					FCP4316	BOSCH	
2.0 TDi 16v (2CH,2CJ)	103	11/10 →					FCP4316	BOSCH	
2.0 TDi 16v (2CH,2CJ)	81	10/10 →	FCP1094	ATE	PR 1ZF				
2.0 TDi 16v (2CH,2CJ)	81	10/10 →	FCP1641	ATE	PR 1ZE, 1ZA				
2.0 TDi 16v (2CH,2CJ)	81	10/10 →					FCP4316	BOSCH	
2.0 TDi 16v (2CH,2CJ)	81	10/10 →					FCP4316	BOSCH	
CC (358)									
3.6 FSI 4motion	220	11/11 → 12/16	FCP4425	LUCAS/TRW	Date To:2012-06,For PR code:1LA				
3.6 FSI 4motion	220	11/11 → 12/16	FCP4223	ATE					
3.6 FSI 4motion	220	11/11 → 12/16					FCP1636	LUCAS/TRW	For PR code:2EA
Corrado									
1.8	118	01/88 → 06/94	FCP774	LUCAS/TRW					
1.8	118	01/88 → 06/94					FCP541	LUCAS/TRW	
1.8 G60	118	01/88 → 06/94	FCP775	LUCAS/TRW					
1.8 G60	118	01/88 → 06/94					FCP541	LUCAS/TRW	
2.0	85	01/88 → 05/95	FCP774	LUCAS/TRW					
2.0	85	01/88 → 05/95					FCP541	LUCAS/TRW	

For material availability see page 16-18 / Per la disponibilità materiali vedere a pagina 16-18



...VOLKSWAGEN	kW				NOTE			NOTE
...Corrado								
2.8 VR6		07/92 → 06/94	**FCP775**	LUCAS/TRW				
2.8 VR6		07/92 → 06/94				**FCP541**	LUCAS/TRW	
2.9	140	01/88 → 05/95	**FCP774**	LUCAS/TRW				
2.9	140	01/88 → 05/95				**FCP541**	LUCAS/TRW	
Derby								
0.9	29	01/77 → 12/85	**FCP105**	ATE				
0.9	29	08/78 → 09/81	**FCP105**	ATE				
0.9	29	10/81 → 12/85	**FCP105**	ATE				
1.0	29	08/78 → 12/85	**FCP105**	ATE				
1.0	29	10/81 → 12/85	**FCP105**	ATE				
1.1	37, 44	01/77 → 12/85	**FCP105**	ATE				
1.1	37, 44	08/78 → 09/81	**FCP105**	ATE				
1.1	37, 44	10/81 → 12/85	**FCP105**	ATE				
1.3	40	08/78 → 12/85	**FCP105**	ATE				
1.3	40	10/81 → 12/85	**FCP105**	ATE				
1.3	44	08/78 → 12/85	**FCP105**	ATE				
1.3	44	10/81 → 12/85	**FCP105**	ATE				
1.3	55	08/78 → 12/85	**FCP105**	ATE				
1.3	55	10/81 → 12/85	**FCP105**	ATE				
EOS (1F7, 1F8)								
2.0 TSi 16v (1F8)	155	11/10 →	**FCP1641**	ATE	PR 1ZA			
2.0 TSi 16v (1F8)	155	11/10 →				**FCP4316**	BOSCH	
3.2 3.2 V6	184	06/06 →	**FCP1765**	ATE				
3.2 3.2 V6	184	06/06 →				**FCP1636**	LUCAS/TRW	
3.6 V6	191	05/09 → 11/10	**FCP1765**	ATE	Disc Diam mm:345,For PR code:1LK			
3.6 V6	191	05/09 → 11/10	**FCP4223**	ATE				
3.6 V6	191	05/09 → 11/10				**FCP1636**	LUCAS/TRW	For PR code:1KZ
Fox								
1.2 i 6V	40	04/05 →	**FCP1094**	ATE				
1.4 i	55	04/05 →	**FCP1094**	ATE				
1.4 TDi	51	04/05 →	**FCP1094**	ATE				
Golf (1)								
1.1	37, 38	01/74 → 06/83	**FCP105**	ATE				
1.1	37, 38	08/75 → 12/78	**FCP105**	ATE				
1.1 i	37, 38	01/79 → 06/83	**FCP105**	ATE				
1.3	43, 44	01/74 → 06/83	**FCP105**	ATE				
1.3 i	43, 44	01/79 → 06/83	**FCP105**	ATE				
1.5	51	04/74 → 08/78	**FCP105**	ATE				
1.5	51	09/78 → 07/83	**FCP419**	KELGATE				
1.5 D	37	01/74 → 07/80	**FCP105**	ATE				
1.5 D	37	01/79 → 07/80	**FCP105**	ATE				
1.5 D	37	08/80 → 06/83	**FCP419**	KELGATE				
1.6	51, 55	01/74 → 07/80	**FCP105**	ATE				
1.6	51, 55	08/80 → 06/83	**FCP419**	KELGATE				
1.6 Cabrio	55	08/81 → 07/83	**FCP419**	KELGATE				
1.6 Cabrio	81	01/79 → 07/81	**FCP105**	ATE				
1.6 D		01/74 → 12/78	**FCP105**	ATE				
1.6 D	40	01/81 → 06/83	**FCP105**	ATE				
1.6 i GTi	81	01/75 → 10/79	**FCP105**	ATE				
1.6 i GTi	81	01/75 → 07/83	**FCP392**	KELGATE				
1.6 TD	51	07/82 → 07/83	**FCP419**	KELGATE				
1.8 GTi	82	01/75 → 12/83	**FCP392**	KELGATE				
Golf (2)								
1.0	33	11/83 → 08/91	**FCP385**	KELGATE	Manual			
1.0	37	11/83 → 08/91	**FCP419**	KELGATE	Automatic			
1.0	37	01/89 → 08/91	**FCP419**	KELGATE				
1.1	33	07/83 → 08/91	**FCP385**	KELGATE	Manual			
1.1	37	07/83 → 08/91	**FCP419**	KELGATE	Automatic			
1.3	33	07/83 → 08/91	**FCP385**	KELGATE	Manual			
1.3	37	07/83 → 08/91	**FCP419**	KELGATE	Automatic			
1.3 Van		01/84 → 05/92	**FCP385**	KELGATE				
1.6	51	07/83 → 08/91	**FCP419**	KELGATE				
1.6	53	07/83 → 08/91	**FCP419**	KELGATE				
1.6	55	07/83 → 08/91	**FCP419**	KELGATE				
1.6 Cabrio	53, 55	01/84 → 12/91	**FCP392**	KELGATE				
1.6 D		08/83 → 08/91	**FCP385**	KELGATE				
1.6 D Van		01/84 → 05/92	**FCP419**	KELGATE				
1.6 TD	51, 55	08/83 → 08/91	**FCP385**	KELGATE				
1.6 TD Van		01/84 → 05/92	**FCP419**	KELGATE				
1.8	66	08/84 → 10/91	**FCP419**	KELGATE				
1.8 C, CL, GL, GLX, Carat	62, 66	08/83 → 12/91	**FCP419**	KELGATE				

For material availability see page 16-18 / Per la disponibilità materiali vedere a pagina 16-18

FERODO RACING
Updated on November 2020



kW

...VOLKSWAGEN

						NOTE			NOTE
...Golf (2)									
1.8 Cabrio	55, 66	01/84 → 08/93	**FCP392**	KELGATE					
1.8 CI, CLI, GLI	62, 66	01/84 → 12/91	**FCP419**	KELGATE					
1.8 GT, Gti	62, 66	08/86 → 12/91	**FCP392**	KELGATE					
1.8 GT, Gti	62, 66	08/86 → 12/91					**FCP596**	LUCAS/TRW	
1.8 GTi 16V	102	10/85 → 07/86	**FCP392**	KELGATE					
1.8 GTi 16V	102	10/85 → 07/86					**FCP596**	LUCAS/TRW	
1.8 i Cat	66	08/87 → 10/91	**FCP419**	KELGATE					
1.8 i Cat Syncro	66	08/87 → 10/91	**FCP419**	KELGATE					
1.8 i GTi G60 16V	118	08/83 → 08/88	**FCP392**	KELGATE					
1.8 i GTi G60 16V	118	08/83 → 08/88					**FCP541**	LUCAS/TRW	
1.8 i GTi G60 16V	118	09/88 → 08/91	**FCP774**	LUCAS/TRW					
1.8 i GTi G60 16V	118	09/88 → 08/91	**FCP775**	LUCAS/TRW					
1.8 i GTi G60 16V	118	09/88 → 08/91					**FCP541**	LUCAS/TRW	
1.8 Syncro	66	02/86 → 07/91	**FCP419**	KELGATE					
1.8 Syncro	72	08/88 → 07/91	**FCP419**	KELGATE					
1.9 TD Van		05/92 →	**FCP774**	LUCAS/TRW					
Golf (3)									
1.4 i Variant	40, 44	01/93 → 09/97	**FCP419**	KELGATE					
1.4 Saloon,Variant	40, 44	08/91 → 08/95					**FCP541**	LUCAS/TRW	
1.6	55	08/91 → 08/95	**FCP419**	KELGATE					
1.6	55	08/91 → 08/95	**FCP774**	LUCAS/TRW					
1.6	55	08/91 → 08/95					**FCP541**	LUCAS/TRW	
1.6 i Cabrio	74	10/94 → 05/98	**FCP775**	LUCAS/TRW					
1.6 i Cabrio	74	06/98 →	**FCP1312**	LUCAS/TRW					
1.6 Saloon,Variant	55, 74	09/95 → 04/97	**FCP775**	LUCAS/TRW					
1.8	55, 66	08/91 → 08/95	**FCP419**	KELGATE					
1.8	55, 66	08/91 → 08/95					**FCP541**	LUCAS/TRW	
1.8	66, 72	09/95 → 09/97	**FCP419**	ATE	ABS				
1.8 GT	66	08/91 → 04/97	**FCP774**	LUCAS/TRW					
1.8 GT	66	08/91 → 04/97					**FCP541**	LUCAS/TRW	
1.8 i Cabrio	55	06/98 →	**FCP775**	LUCAS/TRW					
1.8 i Cabrio	55, 66	07/93 → 05/98	**FCP775**	LUCAS/TRW					
1.8 i Cabrio	66	06/98 →	**FCP774**	LUCAS/TRW					
1.8 Saloon,Variant		09/95 → 04/97	**FCP775**	LUCAS/TRW					
1.8 Variant	55, 66	01/93 → 09/97	**FCP419**	KELGATE					
1.9 D	48, 55	08/91 → 06/95	**FCP419**	KELGATE					
1.9 D	48, 55	08/91 → 06/95	**FCP774**	LUCAS/TRW					
1.9 D	48, 55	08/91 → 06/95					**FCP541**	LUCAS/TRW	
1.9 D GT	47	08/91 → 07/95	**FCP774**	LUCAS/TRW					
1.9 D GT	47	08/91 → 07/95					**FCP541**	LUCAS/TRW	
1.9 D GT	48	08/91 → 07/95	**FCP774**	LUCAS/TRW					
1.9 D GT	48	08/91 → 07/95					**FCP541**	LUCAS/TRW	
1.9 D GT	55	08/91 → 07/95	**FCP774**	LUCAS/TRW					
1.9 D GT	55	08/91 → 07/95					**FCP541**	LUCAS/TRW	
1.9 D Variant		01/93 → 08/95	**FCP775**	LUCAS/TRW					
1.9 D Variant		09/95 → 09/97	**FCP774**	LUCAS/TRW					
1.9 TD	66	08/91 → 06/95	**FCP419**	KELGATE					
1.9 TD	66	08/91 → 06/95	**FCP774**	LUCAS/TRW					
1.9 TD	66	08/91 → 06/95					**FCP541**	LUCAS/TRW	
1.9 TD GT	66	08/91 → 07/95	**FCP774**	LUCAS/TRW					
1.9 TD GT	66	08/91 → 07/95					**FCP541**	LUCAS/TRW	
1.9 TD Variant (1H5)	55	07/93 → 04/99	**FCP775**	LUCAS/TRW	No Abs				
1.9 TD Variant (1H5)	55	05/96 → 10/96	**FCP774**	LUCAS/TRW	with ABS				
1.9 TDi		09/93 → 08/97	**FCP774**	LUCAS/TRW					
1.9 TDi		09/93 → 08/97	**FCP1312**	LUCAS/TRW					
1.9 TDi		09/93 → 08/97					**FCP541**	LUCAS/TRW	
1.9 TDi		04/96 → 08/97	**FCP774**	LUCAS/TRW					
1.9 TDi Cabrio	66	08/95 → 05/98	**FCP775**	LUCAS/TRW					
1.9 TDi Cabrio	66	08/95 → 05/98	**FCP1312**	LUCAS/TRW					
1.9 TDi Cabrio	66	08/95 → 05/98					**FCP541**	LUCAS/TRW	
1.9 TDi Cabrio	66	06/98 →	**FCP775**	LUCAS/TRW					
1.9 TDi Cabrio	81	07/96 → 05/98	**FCP1312**	LUCAS/TRW					
1.9 TDi Cabrio	81	06/98 →	**FCP1312**	LUCAS/TRW					
1.9 TDi Cabrio	81	06/98 →					**FCP541**	LUCAS/TRW	
1.9 TDi Syncro		01/95 → 12/97	**FCP590**	ATE					
2.0 Cabrio, Variant	85	01/93 → 09/97	**FCP774**	LUCAS/TRW					
2.0 Cabrio, Variant	85	01/93 → 09/97					**FCP541**	LUCAS/TRW	
2.0 GTi 16V	110	08/91 → 06/95	**FCP775**	LUCAS/TRW					
2.0 GTi 16V	110	08/91 → 06/95					**FCP541**	LUCAS/TRW	
2.0 i GTi 16V		07/95 → 09/97	**FCP775**	LUCAS/TRW					
2.0 i GTi 16V		07/95 → 09/97					**FCP541**	LUCAS/TRW	
2.0 i Syncro		01/95 → 12/97	**FCP590**	ATE					
2.8 VR6	128	08/91 → 09/97	**FCP775**	LUCAS/TRW					
2.8 VR6	128	08/91 → 09/97					**FCP541**	LUCAS/TRW	
2.9 i VR6 Syncro	140	11/94 → 12/97	**FCP590**	ATE					

For material availability see page 16-18 / Per la disponibilità materiali vedere a pagina 16-18

kW				NOTE			NOTE
...VOLKSWAGEN							
Golf (4)							
1.4 16V	10/97 → 12/00	**FCP1094**	ATE				
1.4 16V	10/97 → 12/00				**FCP541**	LUCAS/TRW	
1.4 16V	55 01/00 → 09/03	**FCP1094**	ATE				
1.4 16V	55 01/00 → 09/03				**FCP541**	LUCAS/TRW	
1.4 Saloon,Variant	04/97 → 03/98	**FCP392**	ATE				
1.6	74 04/97 → 03/98	**FCP392**	ATE				
1.6	74 04/98 → 12/00	**FCP1094**	ATE				
1.6	74 04/98 → 12/00				**FCP541**	LUCAS/TRW	
1.6	75 01/00 → 09/03	**FCP1094**	ATE				
1.6	75 01/00 → 09/03				**FCP541**	LUCAS/TRW	
1.6 16V	74 12/97 → 04/98	**FCP1094**	ATE				
1.6 16V	74 12/97 → 04/98				**FCP541**	LUCAS/TRW	
1.6 Saloon,Variant	74 04/97 → 03/98	**FCP775**	LUCAS/TRW				
1.8	66, 72 09/97 → 03/98	**FCP392**	ATE				
1.8	92 04/98 → 12/00	**FCP1094**	ATE				
1.8	92 04/98 → 12/00				**FCP541**	LUCAS/TRW	
1.8	92 01/00 → 09/03	**FCP1094**	ATE				
1.8	92 01/00 → 09/03				**FCP541**	LUCAS/TRW	
1.8 (Turbo)	04/98 → 12/00	**FCP590**	ATE				
1.8 (Turbo)	04/98 → 12/00				**FCP541**	LUCAS/TRW	
1.8 Saloon,Variant	04/97 → 03/98	**FCP775**	LUCAS/TRW				
1.8 T GTI (1J1)	132 01/00 → 09/03	**FCP590**	ATE				
1.8 T GTI (1J1)	132 01/00 → 09/03				**FCP541**	LUCAS/TRW	
1.8 Variant	55, 66 09/97 → 02/99	**FCP419**	KELGATE				
1.9 D Variant	09/97 → 04/99	**FCP774**	LUCAS/TRW				
1.9 SDi	50 04/98 → 12/00	**FCP1094**	ATE				
1.9 SDi	50 04/98 → 12/00				**FCP541**	LUCAS/TRW	
1.9 SDi	50 01/00 → 09/03	**FCP1094**	ATE				
1.9 SDi	50 01/00 → 09/03				**FCP541**	LUCAS/TRW	
1.9 TDi	110 05/00 → 06/05	**FCP590**	ATE	288mm discs			
1.9 TDi	110 05/00 → 06/05				**FCP541**	LUCAS/TRW	
1.9 TDi	66 10/97 → 05/04	**FCP1094**	ATE	280mm discs			
1.9 TDi	66 10/97 → 05/04				**FCP541**	LUCAS/TRW	
1.9 TDi	74 09/00 → 06/05	**FCP1094**	ATE	280mm discs			
1.9 TDi	74 09/00 → 06/05				**FCP541**	LUCAS/TRW	
1.9 TDi	81 08/97 → 05/04	**FCP1094**	ATE	280mm discs			
1.9 TDi	81 08/97 → 05/04				**FCP541**	LUCAS/TRW	
1.9 TDi	85 12/98 → 06/01	**FCP1094**	ATE	280mm discs			
1.9 TDi	85 12/98 → 06/01				**FCP541**	LUCAS/TRW	
1.9 TDi	96 11/00 → 06/05	**FCP590**	ATE	288mm discs			
1.9 TDi	96 11/00 → 06/05				**FCP541**	LUCAS/TRW	
2.0 Cabrio, Variant	85 09/97 → 04/98	**FCP774**	LUCAS/TRW				
2.0 Cabrio, Variant	85 09/97 → 04/98				**FCP541**	LUCAS/TRW	
2.0 i 16V	05/98 → 12/00	**FCP1094**	ATE				
2.0 i 16V	05/98 → 12/00				**FCP541**	LUCAS/TRW	
2.0 i 16V	85 01/00 → 09/03	**FCP1094**	ATE				
2.0 i 16V	85 01/00 → 09/03				**FCP541**	LUCAS/TRW	
2.3 i VR5	110 12/97 → 12/00	**FCP590**	ATE				
2.3 i VR5	110 12/97 → 12/00				**FCP541**	LUCAS/TRW	
2.3 i VR5	125 01/00 → 09/03	**FCP590**	ATE				
2.3 i VR5	125 01/00 → 09/03				**FCP541**	LUCAS/TRW	
3.2 R32 4motion (1J1)	177 09/02 → 06/05	**FCP1765**	ATE	PR 1LJ (1 piston caliper)			
3.2 R32 4motion (1J1)	177 09/02 → 06/05	**FCP1001**	ATE	PR 1ZT (2 piston caliper)			
3.2 R32 4motion (1J1)	177 09/02 → 06/05				**FCP1491**	LUCAS/TRW	
Golf (5)							
1.4 i 16V	55 10/03 → 12/03	**FCP1094**	ATE				
1.4 i 16V	59 12/03 →	**FCP1094**	ATE				
1.4 i 16V	59 12/03 →				**FCP1636**	LUCAS/TRW	
1.6 FSi	85 10/03 → 12/03	**FCP1094**	ATE				
1.6 FSi	85 12/03 →	**FCP1094**	ATE				
1.6 FSi	85 12/03 →				**FCP1636**	LUCAS/TRW	
1.9 TDi	66 10/03 → 12/03	**FCP1094**	ATE				
1.9 TDi	77 12/03 →	**FCP1094**	ATE				
1.9 TDi	77 12/03 →				**FCP1636**	LUCAS/TRW	
2.0 FSi	110 01/04 →	**FCP1641**	ATE				
2.0 FSi	110 01/04 →				**FCP1636**	LUCAS/TRW	
2.0 GTI	147 10/04 →	**FCP1641**	ATE				
2.0 GTI	147 10/04 →				**FCP1636**	LUCAS/TRW	
2.0 GTI(1K1)	169 09/06 →	**FCP1765**	ATE				
2.0 GTI(1K1)	169 09/06 →				**FCP1636**	LUCAS/TRW	
2.0 TDi	100 10/03 →	**FCP1641**	ATE				
2.0 TDi	100 10/03 →				**FCP1636**	LUCAS/TRW	

For material availability see page 16-18 / Per la disponibilità materiali vedere a pagina 16-18

FERODO RACING
Updated on November 2020

...VOLKSWAGEN	kW				NOTE			NOTE
Golf (5) Plus								
1.4 i 16V	55	01/05 →	FCP1094	ATE				
1.4 i 16V	55	01/05 →				FCP1636	LUCAS/TRW	
1.6 Fsi 16V	85	01/05 →	FCP1094	ATE				
1.6 Fsi 16V	85	01/05 →				FCP1636	LUCAS/TRW	
1.9 TDi	77	01/05 →	FCP1094	ATE				
1.9 TDi	77	01/05 →				FCP1636	LUCAS/TRW	
2.0 TDi 16V	103	01/05 →	FCP1641	ATE				
2.0 TDi 16V	103	01/05 →				FCP1636	LUCAS/TRW	
GOLF ALLTRACK (BA5)								
1.6 TDI 4motion	81	12/14 →	FCP4433	TRW	Disc Diam mm:288,For PR code:1ZE			
1.6 TDI 4motion	81	12/14 →				FCP4434	ATE	For PR code:1KE
1.8 TSI 4motion	132	12/14 →	FCP4433	TRW	Disc Diam mm:288,For PR code:1ZE			
1.8 TSI 4motion	132	12/14 →				FCP4434	ATE	Disc Diam mm:272,For PR code:1KE
2.0 TDI 4motion	110	12/14 →	FCP4433	TRW	Disc Diam mm:288,For PR code:1ZE			
2.0 TDI 4motion	110	12/14 →				FCP4434	ATE	Disc Diam mm:272,For PR code:1KE
2.0 TDI 4motion	135	12/14 →	FCP4433	TRW	Disc Diam mm:312,For PR code:1LV			
2.0 TDI 4motion	135	12/14 →				FCP4434	ATE	Disc Diam mm:272,For PR code:1KE
GOLF SPORTSVAN								
1.2 TSI	63	05/14 →	FCP4433	TRW	Disc Diam mm:288,For PR code:1ZE			
1.2 TSI	63	05/14 →				FCP4434	ATE	
GOLF SPORTSVAN (AM1)								
1.0 TSI	85	05/15 →	FCP4433	TRW	Disc Diam mm:288,For PR code:1ZE			
1.0 TSI	85	05/15 →				FCP4434	ATE	
1.2 TSI	81	04/14 →	FCP4433	TRW	Disc Diam mm:288,For PR code:1ZE			
1.2 TSI	81	04/14 →				FCP4434	ATE	
1.4 TSI	110	02/14 →	FCP4433	TRW	Disc Diam mm:288,For PR code:1ZE			
1.4 TSI	110	02/14 →				FCP4434	ATE	
1.4 TSI	92	04/14 →	FCP4433	TRW	Disc Diam mm:288,For PR code:1ZE			
1.4 TSI	92	04/14 →				FCP4434	ATE	
1.4 TSI MultiFuel	92	04/14 →	FCP4433	TRW	Disc Diam mm:288,For PR code:1ZE			
1.4 TSI MultiFuel	92	04/14 →				FCP4434	ATE	
1.6	81	05/14 →	FCP4433	TRW	Disc Diam mm:288,For PR code:1ZE			
1.6	81	05/14 →				FCP4434	ATE	
1.6 TDI	66	02/14 →	FCP4433	TRW	Disc Diam mm:288,For PR code:1ZE			
1.6 TDI	66	02/14 →				FCP4434	ATE	
1.6 TDI	81	02/14 →	FCP4433	TRW	Disc Diam mm:288,For PR code:1ZE			
1.6 TDI	81	02/14 →				FCP4434	ATE	
1.6 TDI	85	11/16 →	FCP4433	TRW	Disc Diam mm:288,For PR code:1ZE			
1.6 TDI	85	11/16 →				FCP4434	ATE	
2.0 TDI	110	02/14 →	FCP4433	TRW	Disc Diam mm:288,For PR code:1ZE			
2.0 TDI	110	02/14 →				FCP4434	ATE	
2.0 TDI	81	05/14 →	FCP4433	TRW	Disc Diam mm:288,For PR code:1ZE			
2.0 TDI	81	05/14 →				FCP4434	ATE	
GOLF V (1K1)								
3.2	184	09/05 → 11/08	FCP1765	ATE	Disc Diam mm:345,For PR code:1LM/1LK			
3.2	184	09/05 → 11/08	FCP4223	ATE				
3.2	184	09/05 → 11/08				FCP1636	LUCAS/TRW	Disc Diam mm:310,For PR code:2EL
3.2 R32 4motion	177	01/04 → 11/08	FCP1765	ATE				
3.2 R32 4motion	177	01/04 → 11/08	FCP4223	ATE				
3.2 R32 4motion	177	01/04 → 11/08				FCP1636	LUCAS/TRW	
3.2 R32 4motion	184	11/05 → 11/08	FCP1765	ATE	Disc Diam mm:345,For PR code:1LM/1LK			
3.2 R32 4motion	184	11/05 → 11/08	FCP4223	ATE				
3.2 R32 4motion	184	11/05 → 11/08				FCP1636	LUCAS/TRW	Disc Diam mm:310,For PR code:2EL
Golf VI (5K1)								
1.4	59	10/08 → 11/12	FCP1094	ATE	PR 1ZF			
1.4	59	10/08 → 11/12	FCP1641	ATE	PR 1ZD, 1ZE, 1ZP			
1.4	59	10/08 → 11/12				FCP1636	LUCAS/TRW	PR 1KF, 1KY, 1KZ
1.4 TSI	118	10/08 → 11/12	FCP1641	ATE	Disc Diam mm:288/312,For PR :1ZE,1LJ,1ZA,1LL,1ZB			
1.4 TSI	118	10/08 → 11/12	FCP4223	ATE	Disc Diam mm:345,For PR code:1ZK			
1.4 TSI	118	10/08 → 11/12				FCP1491	LUCAS/TRW	
1.4 TSI	118	10/08 → 11/12				FCP1636	LUCAS/TRW	PR 1KF, 1KY, 1KZ
1.4 TSI	90	10/08 → 11/12	FCP1094	ATE	PR 1ZF			
1.4 TSI	90	10/08 → 11/12	FCP1641	ATE	PR 1ZD, 1ZE, 1ZP			
1.4 TSI	90	10/08 → 11/12				FCP1636	LUCAS/TRW	PR 1KF, 1KY, 1KZ
1.6	75	10/08 → 11/12	FCP1094	ATE	PR 1ZF			
1.6	75	10/08 → 11/12	FCP1641	ATE	PR 1ZD, 1ZE, 1ZP			
1.6	75	10/08 → 11/12				FCP1636	LUCAS/TRW	PR 1KF, 1KY, 1KZ
2.0 4motion	191	09/11 → 11/13	FCP4223	ATE				
2.0 4motion	191	09/11 → 11/13				FCP1636	LUCAS/TRW	
2.0 GTi	147	06/09 → 11/13	FCP1641	ATE	Disc Diam mm:288/312,For PR :1ZE,1LJ,1ZA,1LL,1ZB			
2.0 GTi	147	06/09 → 11/13	FCP4223	ATE	Disc Diam mm:345,For PR code:1ZK			

For material availability see page 16-18 / Per la disponibilità materiali vedere a pagina 16-18

kW				NOTE				NOTE
...VOLKSWAGEN								
...GOLF VI (5K1)								
2.0 GTi	147	06/09 → 11/13				**FCP1636**	LUCAS/TRW	Disc Diam mm:256,For PR code:1KF
2.0 GTi	147	06/09 → 11/13				**FCP4316**	BOSCH	Disc Diam mm:272,For PR code:1KS/1KT
2.0 GTi	155	04/09 → 11/12	**FCP1641**	ATE	PR:1LJ,1LL,1LV,1ZA,1ZB,1ZD,1ZE,1ZP			
2.0 GTi	155	04/09 → 11/12				**FCP1636**	LUCAS/TRW	PR:1KF,1KV,1KY,1KZ
2.0 GTi	155	04/09 → 11/12				**FCP4316**	BOSCH	PR 1KT
2.0 R 4motion	188	11/09 → 11/13	**FCP4223**	ATE	Disc Diam mm:345,For PR code:1ZK			
2.0 R 4motion	188	11/09 → 11/13				**FCP1636**	LUCAS/TRW	Disc Diam mm:256,For PR code:1KF
2.0 R 4motion	195	11/09 → 05/11	**FCP4223**	ATE	Disc Diam mm:345,For PR code:1ZK			
2.0 R 4motion	195	11/09 → 05/11				**FCP1636**	LUCAS/TRW	Disc Diam mm:256,For PR code:1KF
2.0 R 4motion	199	11/09 → 11/12	**FCP4223**	ATE	Disc Diam mm:345,For PR code:1ZK			
2.0 R 4motion	199	11/09 → 11/12				**FCP1636**	LUCAS/TRW	Disc Diam mm:310,For PR code:1KW
2.0 TDI	100	10/08 → 11/12	**FCP1641**	ATE	Disc Diam mm:288/312,For PR :1ZE,1LJ,1ZA,1LL,1ZB			
2.0 TDI	100	10/08 → 11/12	**FCP4223**	ATE	Disc Diam mm:345,For PR code:1ZK			
2.0 TDI	100	10/08 → 11/12				**FCP1491**	LUCAS/TRW	
2.0 TDI	103	10/08 → 05/13	**FCP1641**	ATE				
2.0 TDI	103	10/08 → 05/13				**FCP1636**	LUCAS/TRW	PR 1KF, 1KY, 1KZ
2.0 TDI	81	10/08 → 11/12	**FCP1094**	ATE	PR 1ZF			
2.0 TDI	81	10/08 → 11/12	**FCP1641**	ATE	PR 1ZD, 1ZE, 1ZP			
2.0 TDI	81	10/08 → 11/12				**FCP1491**	LUCAS/TRW	PR 1KD
2.0 TDI	81	10/08 → 11/12				**FCP1636**	LUCAS/TRW	PR 1KF, 1KY, 1KZ
2.0 TDi 16v	125	05/09 →	**FCP1641**	ATE	PR 1LJ/1ZA			
2.0 TDi 16v	125	05/09 →				**FCP4316**	BOSCH	
2.5	112	09/09 → 11/13	**FCP1094**	ATE				
2.5	112	09/09 → 11/13	**FCP1641**	ATE				
2.5	112	09/09 → 11/13	**FCP4223**	ATE				
2.5	112	09/09 → 11/13				**FCP1636**	LUCAS/TRW	
2.5	125	07/09 → 05/13	**FCP1094**	ATE				
2.5	125	07/09 → 05/13	**FCP1641**	ATE	Disc Diam mm:288/312,For PR :1ZE,1LJ,1ZA,1LL,1ZB			
2.5	125	07/09 → 05/13	**FCP4223**	ATE	Disc Diam mm:345,For PR code:1ZK			
2.5	125	07/09 → 05/13				**FCP1636**	LUCAS/TRW	Disc Diam mm:256,For PR code:1KF
Golf VI Cabriolet (517)								
2.0 TSI	162	11/13 →	**FCP4433**	LUCAS/TRW				
GOLF VI Convertible (517)								
1.2 TSI	77	03/11 → 11/13	**FCP1641**	ATE	Disc Diam mm:288/312,For PR code:1ZA,1ZB,1ZE			
1.2 TSI	77	03/11 → 11/13	**FCP4223**	ATE	Disc Diam mm:345,For PR code:1ZK			
1.2 TSI	77	03/11 → 11/13				**FCP1491**	LUCAS/TRW	
1.2 TSI	77	03/11 → 11/13				**FCP4316**	BOSCH	
1.2 TSI	77	11/13 → 11/13	**FCP4433**	LUCAS/TRW				
1.2 TSI 16V	77	11/13 →	**FCP1641**	ATE	Disc Diam mm:288/312,For PR code:1ZA,1ZB,1ZE			
1.2 TSI 16V	77	11/13 →	**FCP4223**	ATE	Disc Diam mm:345,For PR code:1ZK			
1.2 TSI 16V	77	11/13 →				**FCP1491**	LUCAS/TRW	
1.4 TSI	118	03/11 →	**FCP1641**	ATE	Disc Diam mm:288/312,For PR code:1ZA,1ZB,1ZE			
1.4 TSI	118	03/11 →	**FCP4223**	ATE	Disc Diam mm:345,For PR code:1ZK			
1.4 TSI	118	03/11 →				**FCP1491**	LUCAS/TRW	
1.4 TSI	118	03/11 →				**FCP4316**	BOSCH	
1.4 TSI	90	11/11 →	**FCP1641**	ATE	Disc Diam mm:288/312,For PR code:1ZA,1ZB,1ZE			
1.4 TSI	90	11/11 →	**FCP4223**	ATE	Disc Diam mm:345,For PR code:1ZK			
1.4 TSI	90	11/11 →				**FCP1491**	LUCAS/TRW	
1.4 TSI	90	11/11 →				**FCP4316**	BOSCH	
1.4 TSI	110	11/13 →	**FCP1641**	ATE	Disc Diam mm:288/312,For PR code:1ZA,1ZB,1ZE			
1.4 TSI	110	11/13 →	**FCP4223**	ATE	Disc Diam mm:345,For PR code:1ZK			
1.4 TSI	110	11/13 →				**FCP1491**	LUCAS/TRW	
1.4 TSI	92	11/13 →	**FCP1641**	ATE	Disc Diam mm:288/312,For PR code:1ZA,1ZB,1ZE			
1.4 TSI	92	11/13 →	**FCP4223**	ATE	Disc Diam mm:345,For PR code:1ZK			
1.4 TSI	92	11/13 →				**FCP1491**	LUCAS/TRW	
1.6 TDI	77	03/11 →	**FCP1641**	ATE	Disc Diam mm:288/312,For PR code:1ZA,1ZB,1ZE			
1.6 TDI	77	03/11 →	**FCP4223**	ATE	Disc Diam mm:345,For PR code:1ZK			
1.6 TDI	77	03/11 →				**FCP1491**	LUCAS/TRW	
1.6 TDI	77	03/11 →				**FCP4316**	BOSCH	
2.0 GTI	155	11/11 →	**FCP1641**	ATE	Disc Diam mm:288/312,For PR code:1ZA,1ZB,1ZE			
2.0 GTI	155	11/11 →	**FCP4223**	ATE	Disc Diam mm:345,For PR code:1ZK			
2.0 GTI	155	11/11 →				**FCP4316**	BOSCH	Disc Diam mm:272,For PR code:1KS/1KT
2.0 R	195	01/13 →	**FCP4223**	ATE	Disc Diam mm:345,For PR code:1ZK			
2.0 R	195	01/13 →				**FCP1636**	LUCAS/TRW	Disc Diam mm:310,For PR code:1KW
2.0 TDI	103	11/11 →	**FCP1641**	ATE	Disc Diam mm:288/312,For PR code:1ZA,1ZB,1ZE			
2.0 TDI	103	11/11 →	**FCP4223**	ATE	Disc Diam mm:345,For PR code:1ZK			
2.0 TDI	103	11/11 →				**FCP1491**	LUCAS/TRW	
2.0 TDI	103	11/11 →				**FCP4316**	BOSCH	
2.0 TDI	103	11/13 →	**FCP4433**	LUCAS/TRW				
2.0 TDI	110	11/13 →	**FCP1641**	ATE	Disc Diam mm:288/312,For PR code:1ZA,1ZB,1ZE			
2.0 TDI	110	11/13 →	**FCP4223**	ATE	Disc Diam mm:345,For PR code:1ZK			
2.0 TDI	110	11/13 →				**FCP1491**	LUCAS/TRW	
2.0 TDI	81	11/13 →	**FCP1641**	ATE	Disc Diam mm:288/312,For PR code:1ZA,1ZB,1ZE			
2.0 TDI	81	11/13 →	**FCP4223**	ATE	Disc Diam mm:345,For PR code:1ZK			
2.0 TDI	81	11/13 →				**FCP1491**	LUCAS/TRW	

For material availability see page 16-18 / Per la disponibilità materiali vedere a pagina 16-18

FERODO RACING
Updated on November 2020

kW				NOTE			NOTE
...VOLKSWAGEN							
...GOLF VI Convertible (517)							
2.0 TSI	162	11/13 →	**FCP1641**	ATE	Disc Diam mm:288/312,For PR code:1ZA,1ZB,1ZE		
2.0 TSI	162	11/13 →	**FCP4223**	ATE	Disc Diam mm:345,For PR code:1ZK		
2.0 TSI	162	11/13 →				**FCP4316**	BOSCH	Disc Diam mm:272,For PR code:1KS/1KT
Golf VI Variant (AJ5)							
2.0 TDi 16v	81	01/10 →	**FCP1094**	ATE	PR 1ZM		
2.0 TDi 16v	81	01/10 →	**FCP1641**	ATE	PR 1ZE		
2.0 TDi 16v	81	01/10 →				**FCP4316**	BOSCH	
GOLF VII (5G1, BQ1, BE1, BE2)							
1.0 TSI	63	01/17 →	**FCP4433**	TRW	Disc Diam mm:288,For PR code:1ZE		
1.0 TSI	63	01/17 →				**FCP4434**	ATE	For PR code:1KE
1.0 TSI	81	11/16 →	**FCP4433**	TRW	Disc Diam mm:288,For PR code:1ZE		
1.0 TSI	81	11/16 →				**FCP4434**	ATE	For PR code:1KE
1.0 TSI	85	05/15 →				**FCP4434**	ATE	For PR code:1KE
1.2 TSI	63	08/12 →	**FCP4433**	LUCAS/TRW				
1.2 TSI	63	08/12 →				**FCP4434**	ATE	For PR code:1KE
1.2 TSI	77	11/12 →	**FCP4433**	LUCAS/TRW				
1.2 TSI	77	11/12 →				**FCP4434**	ATE	For PR code:1KE
1.2 TSI	81	04/14 →				**FCP4434**	ATE	For PR code:1KE
1.4 GTE Hybrid	110	05/14 →	**FCP4433**	TRW	For PR code:1ZD/1ZG			
1.4 GTE Hybrid	110	05/14 →				**FCP4434**	ATE	Disc Diam mm:272,For PR code:1KE/1KK
1.4 TGI CNG	81	06/13 →	**FCP4433**	LUCAS/TRW				
1.4 TGI CNG	81	06/13 →	**FCP4425**	LUCAS/TRW	PR 1LJ - Sport package option			
1.4 TGI CNG	81	06/13 →				**FCP4697**	ATE	
1.4 TGI CNG	81	06/13 →				**FCP4434**	ATE	For PR code:1KE
1.4 TSI	103	08/12 →	**FCP4433**	LUCAS/TRW				
1.4 TSI	103	08/12 →	**FCP4425**	LUCAS/TRW	For PR : 1LJ, 1LM - Sport package option			
1.4 TSI	103	08/12 →				**FCP4697**	ATE	
1.4 TSI	103	08/12 →				**FCP4434**	ATE	Disc Diam mm:272,For PR code:1KE
1.4 TSI	110	05/14 →	**FCP4433**	TRW	Disc Diam mm:288,For PR code:1ZE			
1.4 TSI	110	05/14 →				**FCP4434**	ATE	Disc Diam mm:272,For PR code:1KE
1.4 TSI	90	11/12 →	**FCP4433**	LUCAS/TRW				
1.4 TSI	90	11/12 →				**FCP4434**	ATE	Disc Diam mm:272,For PR code:1KE
1.4 TSI	92	05/14 →	**FCP4433**	TRW	Disc Diam mm:288,For PR code:1ZE			
1.4 TSI	92	05/14 →				**FCP4434**	ATE	Disc Diam mm:272,For PR code:1KE
1.4 TSI MultiFuel	90	04/13 →	**FCP4433**	LUCAS/TRW				
1.4 TSI MultiFuel	90	04/13 →	**FCP4425**	LUCAS/TRW	PR 1LJ - Sport package option			
1.4 TSI MultiFuel	90	04/13 →				**FCP4697**	ATE	
1.4 TSI MultiFuel	90	04/13 →				**FCP4434**	ATE	Disc Diam mm:272,For PR code:1KE
1.4 TSI MultiFuel	92	12/13 →	**FCP4433**	TRW	Disc Diam mm:312,For PR code:1ZA/1ZB			
1.4 TSI MultiFuel	92	12/13 →				**FCP4434**	ATE	Disc Diam mm:272,For PR code:1KE
1.6	81	05/14 →	**FCP4433**	TRW	Disc Diam mm:288,For PR code:1ZE			
1.6	81	05/14 →				**FCP4434**	ATE	For PR code:1KE
1.6 TDI	66	04/13 →	**FCP4433**	LUCAS/TRW				
1.6 TDI	66	04/13 →				**FCP4434**	ATE	For PR code:1KE
1.6 TDI	77	08/12 →				**FCP4434**	ATE	For PR code:1KE
1.6 TDI	77	11/12 →	**FCP4433**	LUCAS/TRW				
1.6 TDI	81	01/13 →	**FCP4433**	LUCAS/TRW				
1.6 TDI	81	01/13 →				**FCP4434**	ATE	For PR code:1KE
1.6 TDI	85	11/16 →				**FCP4434**	ATE	For PR code:1KE
1.6 TDI 4motion	77	11/12 →	**FCP4433**	LUCAS/TRW				
1.6 TDI 4motion	77	11/12 →				**FCP4434**	ATE	For PR code:1KE
1.6 TDI 4motion	81	01/13 →	**FCP4433**	LUCAS/TRW				
1.6 TDI 4motion	81	01/13 →				**FCP4434**	ATE	For PR code:1KE
2.0 GTD	135	04/13 →	**FCP4433**	LUCAS/TRW				
2.0 GTD	135	04/13 →	**FCP4425**	LUCAS/TRW	PR 1LK - Sport package option			
2.0 GTD	135	04/13 →				**FCP4697**	ATE	Disc Diam mm:300,For PR code:1KV
2.0 GTD	135	04/13 →				**FCP4434**	ATE	Disc Diam mm:272,For PR code:1KE
2.0 GTI	155	11/13 →	**FCP4433**	LUCAS/TRW	Pr Number 1ZB			
2.0 GTI	155	11/13 →				**FCP4697**	ATE	Disc Diam mm:310/300,For PR code:1KJ/1KY/1KV
2.0 GTI	162	04/13 →	**FCP4433**	LUCAS/TRW				
2.0 GTI	162	04/13 →	**FCP4425**	LUCAS/TRW	PR 1LJ - Sports package option			
2.0 GTI	162	04/13 →				**FCP4697**	ATE	Disc Diam mm:310/300,For PR code:1KJ/1KY/1KV
2.0 GTI	169	04/13 →	**FCP4433**	LUCAS/TRW				
2.0 GTI	169	04/13 →	**FCP4425**	LUCAS/TRW	PR 1LJ - Sports package option			
2.0 GTI	169	04/13 →				**FCP4697**	ATE	Disc Diam mm:310/300,For PR code:1KJ/1KY/1KV
2.0 GTI	180	03/17 →	**FCP4433**	LUCAS/TRW	312mm disc - PR number 1ZA-1ZB			
2.0 GTI	180	03/17 →	**FCP4425**	LUCAS/TRW	340mm disc - PR number 1LJ			
2.0 GTI	180	03/17 →				**FCP4697**	ATE	300mm disc - PR number 1KV
2.0 GTI Clubsport	195	02/16 →	**FCP4425**	LUCAS/TRW	Pr Number 1LJ,1LM			
2.0 GTI Clubsport	195	02/16 →				**FCP4697**	ATE	Disc Diam mm:310, For PR code:1KJ/1KY
2.0 GTI Clubsport S	228	09/16 →	**FCP4433**	TRW				
2.0 GTI Clubsport S	228	09/16 →				**FCP4434**	ATE	
2.0 R 4motion	206	11/13 →	**FCP4425**	LUCAS/TRW	PR 1LJ			
2.0 R 4motion	206	11/13 →				**FCP4697**	ATE	Disc Diam mm:310,For PR code:1KY
2.0 R 4motion	213	11/13 →	**FCP4425**	LUCAS/TRW	PR 1LJ			

For material availability see page 16-18 / Per la disponibilità materiali vedere a pagina 16-18

...VOLKSWAGEN

...GOLF VII (5G1, BQ1, BE1, BE2)

	kW					NOTE			NOTE
2.0 R 4motion	213	11/13 →					FCP4697	ATE	
2.0 R 4motion	221	11/13 →	FCP4425	LUCAS/TRW	PR 1LJ				
2.0 R 4motion	221	11/13 →					FCP4697	ATE	Disc Diam mm:310,For PR code:1KY
2.0 TDI	105	08/12 →	FCP4433	LUCAS/TRW					
2.0 TDI	105	08/12 →					FCP4434	ATE	Disc Diam mm:272,For PR code:1KR
2.0 TDI	110	11/12 →	FCP4433	LUCAS/TRW					
2.0 TDI	110	11/12 →					FCP4434	ATE	Disc Diam mm:272,For PR code:1KE
2.0 TDI	81	11/12 →	FCP4433	LUCAS/TRW					
2.0 TDI	81	11/12 →					FCP4434	ATE	For PR code:1KE
2.0 TDI 4motion	110	11/12 →	FCP4433	LUCAS/TRW					
2.0 TDI 4motion	110	11/12 →					FCP4434	ATE	Disc Diam mm:272,For PR code:1KE
e-Golf	100	12/16 →	FCP4433	TRW	For PR code:1ZE				
e-Golf	100	12/16 →					FCP4434	ATE	For PR code:1KE
e-Golf	85	03/14 → 02/17	FCP4433	TRW	For PR code:1ZE				
e-Golf	85	03/14 → 02/17					FCP4434	ATE	For PR code:1KE

GOLF VII Estate (BA5, BV5)

2.0 R 4motion	206	03/15 →	FCP4425	LUCAS/TRW	Pr Number 1LM				
2.0 R 4motion	206	03/15 →					FCP4697	ATE	For PR code:1KY
2.0 R 4motion	221	03/15 →	FCP4425	LUCAS/TRW	Pr Number 1LM				
2.0 R 4motion	221	03/15 →					FCP4697	ATE	For PR code:1KY

GOLF VII Variant (BA5, BV5)

1.0 TSI	63	01/17 →	FCP4433	TRW	Disc Diam mm:288,For PR code:1ZE				
1.0 TSI	63	01/17 →					FCP4434	ATE	For PR code:1KE
1.0 TSI	81	11/16 →	FCP4433	TRW	Disc Diam mm:288,For PR code:1ZE				
1.0 TSI	81	11/16 →					FCP4434	ATE	For PR code:1KE
1.0 TSI	85	05/15 →					FCP4434	ATE	For PR code:1KE
1.2 TSI	63	05/13 →	FCP4433	LUCAS/TRW					
1.2 TSI	63	05/13 →					FCP4434	ATE	For PR code:1KE
1.2 TSI	77	05/13 →	FCP4433	LUCAS/TRW	For Pr number 1ZA,1ZB,1ZD,1ZE,1ZP,1LV				
1.2 TSI	77	05/13 →	FCP4425	LUCAS/TRW	1LM				
1.2 TSI	77	05/13 →					FCP4697	ATE	For Pr number 1KV,1KY
1.2 TSI	77	05/13 →					FCP4434	ATE	For PR code:1KE
1.2 TSI	81	04/14 →					FCP4434	ATE	For PR code:1KE
1.4 TGI CNG	81	09/13 →	FCP4425	LUCAS/TRW	PR 1LJ,1LM				
1.4 TGI CNG	81	09/13 →					FCP4434	ATE	For PR code:1KE
1.4 TSI	103	05/13 →	FCP4433	TRW	Disc Diam mm:288,For PR code:1ZE				
1.4 TSI	103	05/13 →					FCP4434	ATE	Disc Diam mm:272,For PR code:1KE
1.4 TSI	110	05/14 →	FCP4425	LUCAS/TRW	PR 1LJ,1LM				
1.4 TSI	110	05/14 →					FCP4434	ATE	Disc Diam mm:272,For PR code:1KE
1.4 TSI	90	05/13 →	FCP4425	LUCAS/TRW	PR 1LJ,1LM				
1.4 TSI	90	05/13 →					FCP4434	ATE	Disc Diam mm:272,For PR code:1KE
1.4 TSI	92	05/14 →	FCP4425	LUCAS/TRW	PR 1LJ,1LM				
1.4 TSI	92	05/14 →					FCP4434	ATE	Disc Diam mm:272,For PR code:1KE
1.4 TSI BiFuel	81	09/13 →	FCP4425	LUCAS/TRW	PR 1LJ,1LM				
1.4 TSI CNG	81	09/13 →	FCP4433	LUCAS/TRW					
1.4 TSI MultiFuel	90	04/13 →	FCP4433	TRW	Disc Diam mm:288,For PR code:1ZE				
1.4 TSI MultiFuel	90	04/13 →					FCP4434	ATE	Disc Diam mm:272,For PR code:1KE
1.4 TSI MultiFuel	92	05/14 →	FCP4425	LUCAS/TRW	PR 1LJ,1LM				
1.4 TSI MultiFuel	92	05/14 →					FCP4434	ATE	Disc Diam mm:272,For PR code:1KE
1.6	81	05/14 →	FCP4433	TRW	Disc Diam mm:288,For PR code:1ZE				
1.6	81	05/14 →					FCP4434	ATE	For PR code:1KE
1.6 TDI	66	05/13 →	FCP4433	LUCAS/TRW					
1.6 TDI	66	05/13 →					FCP4434	ATE	For PR code:1KE
1.6 TDI	77	05/13 →	FCP4433	LUCAS/TRW					
1.6 TDI	77	05/13 →					FCP4434	ATE	For PR code:1KE
1.6 TDI	81	05/13 →	FCP4433	LUCAS/TRW					
1.6 TDI	81	05/13 →					FCP4434	ATE	For PR code:1KE
1.6 TDI	85	11/16 →	FCP4433	TRW	Disc Diam mm:288,For PR code:1ZE				
1.6 TDI	85	11/16 →					FCP4434	ATE	For PR code:1KE
1.6 TDI 4motion	77	05/13 →	FCP4433	LUCAS/TRW					
1.6 TDI 4motion	77	05/13 →					FCP4434	ATE	For PR code:1KE
1.6 TDI 4motion	81	05/13 →	FCP4433	TRW	Disc Diam mm:288,For PR code:1ZE				
1.6 TDI 4motion	81	05/13 →					FCP4434	ATE	For PR code:1KE
2.0 GTD	135	01/15 →	FCP4433	LUCAS/TRW	Pr number 1ZA,1ZB,1ZD,1ZE,1ZP,1LV				
2.0 GTD	135	01/15 →	FCP4425	LUCAS/TRW	For Pr number 1LM - Sport package option				
2.0 GTD	135	01/15 →					FCP4697	ATE	Disc Diam mm:300,For PR code:1KV
2.0 GTD	135	01/15 →					FCP4434	ATE	Disc Diam mm:272,For PR code:1KE
2.0 TDI	110	04/13 →	FCP4433	LUCAS/TRW	For Pr number 1ZA,1ZB,1ZD,1ZE,1ZP,1LV				
2.0 TDI	110	04/13 →	FCP4425	LUCAS/TRW	For Pr number 1LM				
2.0 TDI	110	04/13 →	FCP4697	ATE	For Pr number 1KV,1KY				
2.0 TDI	110	04/13 →					FCP4434	ATE	Disc Diam mm:272,For PR code:1KE
2.0 TDI	81	05/13 →	FCP4433	TRW	Disc Diam mm:288,For PR code:1ZE				
2.0 TDI	81	05/13 →					FCP4434	ATE	For PR code:1KE
2.0 TDI 4motion	110	04/13 →	FCP4433	TRW	Disc Diam mm:288,For PR code:1ZE				
2.0 TDI 4motion	110	04/13 →					FCP4434	ATE	Disc Diam mm:272,For PR code:1KE

For material availability see page 16-18 / Per la disponibilità materiali vedere a pagina 16-18

FERODO RACING

Updated on November 2020



kW

...VOLKSWAGEN

					NOTE			NOTE
Jetta								
1.1	37	01/80 → 11/83	**FCP105**	ATE				
1.1	37	12/83 →	**FCP385**	KELGATE				
1.3	43, 44	01/80 → 11/83	**FCP105**	ATE				
1.3	37	11/83 → 12/92	**FCP385**	KELGATE				
1.3	37	08/87 → 12/92	**FCP385**	KELGATE				
1.3	40	11/83 → 12/92	**FCP385**	KELGATE				
1.3	40	08/87 → 12/92	**FCP385**	KELGATE				
1.3	44	11/83 → 12/92	**FCP385**	KELGATE				
1.3	44	08/87 → 12/92	**FCP385**	KELGATE				
1.3 Auto	40	11/83 → 12/92	**FCP419**	KELGATE				
1.3 Auto	40	08/87 → 12/92	**FCP419**	KELGATE				
1.3 i	37	01/89 → 12/92	**FCP385**	KELGATE				
1.3 i	40	01/89 → 12/92	**FCP385**	KELGATE				
1.3 i	44	01/89 → 12/92	**FCP385**	KELGATE				
1.3 i Auto	40	01/89 → 12/92	**FCP419**	KELGATE				
1.5	51	01/80 → 11/83	**FCP419**	KELGATE				
1.5 D	37	01/79 → 12/83	**FCP105**	ATE				
1.6 D	40, 51	01/81 → 11/83	**FCP105**	ATE				
1.6 i	63, 81	01/80 → 11/83	**FCP392**	KELGATE				
1.6 TD	51, 59	01/81 → 12/82	**FCP419**	KELGATE				
1.6 TD	51, 59	11/83 → 08/89	**FCP385**	KELGATE				
1.6 TD	51, 59	08/89 → 12/92	**FCP419**	KELGATE				
1.8	66, 82	11/83 → 12/92	**FCP419**	KELGATE				
1.8	82	01/80 → 11/83	**FCP392**	KELGATE				
1.8 GT	66, 72	11/83 → 12/92	**FCP392**	KELGATE				
1.8 GT	66, 72	11/83 → 12/92				**FCP541**	LUCAS/TRW	
1.8 GT 16V	95, 102	11/83 → 08/88	**FCP392**	KELGATE				
1.8 GT 16V	95, 102	11/83 → 08/88				**FCP541**	LUCAS/TRW	
1.8 GT 16V	95, 102	08/88 → 12/91	**FCP774**	LUCAS/TRW				
1.8 GT 16V	95, 102	08/88 → 12/91				**FCP541**	LUCAS/TRW	
1.8 Syncro	66, 72	01/86 → 07/89	**FCP419**	KELGATE				
Jetta (III)								
1.4 TSi 16v (1K2)	103	07/06 → 06/08	**FCP1641**	ATE	PR 1ZP, 1ZE			
1.4 TSi 16v (1K2)	103	07/06 → 06/08				**FCP4316**	BOSCH	
1.4 TSi 16v (1K2)	118	07/08 → 10/10	**FCP1641**	ATE	PR 1ZP/1ZD/1LV, 1LJ, 1ZE			
1.4 TSi 16v (1K2)	118	07/08 → 10/10				**FCP4316**	BOSCH	
1.4 TSi 16v (1K2)	125	07/06 → 06/08	**FCP1641**	ATE	PR 1ZD/1LV, 1LJ			
1.4 TSi 16v (1K2)	125	07/06 → 06/08				**FCP4316**	BOSCH	
1.4 TSi 16v (1K2)	90	07/07 → 10/10	**FCP1641**	ATE	PR 1ZP, 1ZE, 1ZA			
1.4 TSi 16v (1K2)	90	07/07 → 10/10				**FCP4316**	BOSCH	
1.6 FSi 16v (1K2)	85	09/05 → 06/08	**FCP1094**	ATE	PR 1ZM			
1.6 FSi 16v (1K2)	85	09/05 → 06/08				**FCP4316**	BOSCH	
2.0 FSi 16v (1K2)	110	08/05 → 06/08	**FCP1641**	ATE	PR 1ZP, 1ZE			
2.0 FSi 16v (1K2)	110	08/05 → 06/08				**FCP4316**	BOSCH	
2.0 FSi/TFSi 16v (1K2)	147	09/05 → 10/10	**FCP1641**	ATE	PR 1ZD/1LV, 1LJ			
2.0 FSi/TFSi 16v (1K2)	147	09/05 → 10/10				**FCP4316**	BOSCH	
2.0 TDi 16v (1K2)	100	09/05 → 09/10	**FCP1641**	ATE	PR 1ZP, 1ZE			
2.0 TDi 16v (1K2)	100	09/05 → 09/10				**FCP4316**	BOSCH	
2.0 TDi 16v (1K2)	103	08/05 → 10/10	**FCP1641**	ATE	PR 1ZP,1ZE			
2.0 TDi 16v (1K2)	103	08/05 → 10/10				**FCP4316**	BOSCH	
2.0 TDi 16v (1K2)	125	06/06 → 10/10	**FCP1641**	ATE	PR 1ZD/1LV, 1LJ			
2.0 TDi 16v (1K2)	125	06/06 → 10/10				**FCP4316**	BOSCH	
2.0 TDi 8v (1K2)	103	10/05 → 06/08	**FCP1641**	ATE	PR 1ZP, 1ZE			
2.0 TDi 8v (1K2)	103	10/05 → 06/08				**FCP4316**	BOSCH	
2.5 20v (1K2)	125	07/07 → 10/10	**FCP1641**	ATE	PR 1ZD/1LV, 1LJ			
2.5 20v (1K2)	125	07/07 → 10/10				**FCP4316**	BOSCH	
2.5 FSi 20v (1K2)	110	01/05 → 06/08	**FCP1641**	ATE	PR 1ZP, 1ZE			
2.5 FSi 20v (1K2)	110	01/05 → 06/08				**FCP4316**	BOSCH	
Jetta (IV)								
1.4 TSi 16v (162)	118	04/11 →	**FCP1641**	ATE	PR 1ZA			
1.4 TSi 16v (162)	118	04/11 →				**FCP4316**	BOSCH	
2.0 TDi 16v (162)	103	07/10 →	**FCP1641**	ATE	PR 1ZE			
2.0 TDi 16v (162)	103	07/10 →				**FCP4316**	BOSCH	
2.0 TFSi 16v (162)	147	12/10 →	**FCP1641**	ATE	PR 1ZA/1ZB			
2.0 TFSi 16v (162)	147	12/10 →				**FCP4316**	BOSCH	
JETTA I (16)								
1.6	55	08/81 → 07/83	**FCP419**	KELGATE				
1.6	63	08/78 → 02/84	**FCP419**	KELGATE				
1.6	55	08/82 → 07/83	**FCP419**	KELGATE				

For material availability see page 16-18 / Per la disponibilità materiali vedere a pagina 16-18

...VOLKSWAGEN	kW				NOTE			NOTE
JETTA II (19E, 1G2, 165)								
1.6	51	10/86 → 10/91	**FCP419**	KELGATE				
1.6	53	03/86 → 10/91	**FCP419**	KELGATE				
1.6	55	01/84 → 07/92	**FCP419**	KELGATE				
Lupo								
1.6 GTI	92	09/00 → 07/05	**FCP1312**	LUCAS/TRW				
PASSAT								
1.3 Auto,Variant	44	01/73 → 10/79	**FCP105**	ATE				
1.3 Auto,Variant	44	11/79 → 07/85	**FCP419**	KELGATE				
1.3 Manual Saloon	40, 44	01/73 → 10/79	**FCP105**	ATE				
1.3 Manual Saloon	40, 44	11/79 → 12/83	**FCP419**	KELGATE				
1.5	63	01/73 → 10/79	**FCP105**	ATE				
1.6		01/73 → 10/79	**FCP105**	ATE				
1.6	74	10/96 → 07/00	**FCP1289**	LUCAS/TRW				
1.6	74	10/96 → 07/00				**FCP596**	LUCAS/TRW	
1.6	74	10/97 → 07/00	**FCP1289**	LUCAS/TRW				
1.6	74	10/97 → 07/00				**FCP541**	LUCAS/TRW	
1.6	51	01/84 → 10/93	**FCP419**	KELGATE				
1.6	53	01/84 → 10/93	**FCP419**	KELGATE				
1.6	55	11/79 → 12/83	**FCP419**	KELGATE				
1.6	55	01/84 → 10/93	**FCP419**	KELGATE				
1.6	63	11/79 → 12/83	**FCP419**	KELGATE				
1.6	81	11/79 → 12/83	**FCP419**	KELGATE				
1.6 D Saloon	40, 51	04/88 → 08/89	**FCP775**	LUCAS/TRW				
1.6 D Saloon/Variant	40, 51	01/84 → 03/88	**FCP419**	KELGATE				
1.6 GLI Auto,Variant	81	11/79 → 12/83	**FCP419**	KELGATE				
1.6 TD Saloon	51, 59	01/84 → 07/90	**FCP419**	KELGATE				
1.6 TD Saloon	51, 59	08/90 → 10/93	**FCP775**	LUCAS/TRW				
1.6 TD SW Estate	40, 51	01/84 → 07/90	**FCP419**	KELGATE				
1.8		10/93 → 10/96	**FCP775**	LUCAS/TRW				
1.8 Auto, Manual, Saloon, Variant		11/79 → 12/83	**FCP419**	KELGATE				
1.8 Saloon	55, 66	04/88 → 08/89	**FCP775**	LUCAS/TRW				
1.8 Saloon	68, 82	09/89 → 10/93	**FCP775**	LUCAS/TRW				
1.8 Saloon 20V	92	10/96 → 11/00	**FCP775**	LUCAS/TRW				
1.8 Saloon 20V	92	10/96 → 11/00				**FCP541**	LUCAS/TRW	
1.8 Saloon Turbo 20V		10/96 → 11/00	**FCP1323**	ATE				
1.8 Saloon Turbo 20V		10/96 → 11/00				**FCP541**	LUCAS/TRW	
1.8 Saloon, Variant	66, 68	01/84 → 03/88	**FCP419**	KELGATE				
1.8 SW Estate		04/88 → 10/93	**FCP775**	LUCAS/TRW				
1.8 Variant 20V	92	10/97 → 11/00	**FCP1289**	LUCAS/TRW				
1.8 Variant 20V	92	10/97 → 11/00				**FCP541**	LUCAS/TRW	
1.8 Variant Turbo 20V	110	01/97 → 11/00	**FCP1289**	LUCAS/TRW				
1.8 Variant Turbo 20V	110	01/97 → 11/00	**FCP1323**	ATE				
1.8 Variant Turbo 20V	110	01/97 → 11/00				**FCP541**	LUCAS/TRW	
1.9		01/88 → 03/88	**FCP419**	KELGATE				
1.9		04/88 → 08/89	**FCP775**	LUCAS/TRW				
1.9 D	50	09/89 → 10/96	**FCP775**	LUCAS/TRW				
1.9 D , Variant	55, 66	09/89 → 10/96	**FCP775**	LUCAS/TRW				
1.9 GL5		09/81 → 12/83	**FCP419**	KELGATE				
1.9 TDi Saloon	66	10/96 → 11/00	**FCP1289**	ATE				
1.9 TDi Saloon	66	10/96 → 11/00				**FCP541**	LUCAS/TRW	
1.9 TDi Saloon	81, 85	10/96 → 11/00	**FCP1289**	LUCAS/TRW				
1.9 TDi Saloon	81, 85	10/96 → 11/00	**FCP1323**	ATE				
1.9 TDi Saloon	81, 85	10/96 → 11/00				**FCP541**	LUCAS/TRW	
1.9 TDi Saloon	81, 85	10/96 → 11/00				**FCP596**	LUCAS/TRW	
1.9 TDi Variant	66	10/97 → 11/00	**FCP1289**	LUCAS/TRW				
1.9 TDi Variant	66	10/97 → 11/00	**FCP1323**	ATE				
1.9 TDi Variant	66	10/97 → 11/00				**FCP541**	LUCAS/TRW	
1.9 TDi Variant	81	10/97 → 11/00	**FCP1289**	LUCAS/TRW				
1.9 TDi Variant	81	10/97 → 11/00	**FCP1323**	ATE				
1.9 TDi Variant	81	10/97 → 11/00				**FCP541**	LUCAS/TRW	
2.0	85	04/88 → 10/93	**FCP774**	LUCAS/TRW				
2.0	85	04/88 → 10/93				**FCP541**	LUCAS/TRW	
2.0	85	10/93 → 10/96	**FCP774**	LUCAS/TRW				
2.0	85	10/93 → 10/96				**FCP541**	LUCAS/TRW	
2.0 16V	100	04/88 → 10/93	**FCP774**	LUCAS/TRW				
2.0 16V	100	04/88 → 10/93				**FCP541**	LUCAS/TRW	
2.0 16V	110	10/93 → 10/96	**FCP590**	ATE				
2.0 16V	110	10/93 → 10/96				**FCP541**	LUCAS/TRW	
2.0 GL5	84	08/83 → 03/88	**FCP419**	KELGATE				
2.2	85, 100	01/84 → 03/88	**FCP419**	KELGATE				
2.2 GT5		10/80 → 03/88	**FCP774**	LUCAS/TRW				
2.2 GT5		10/80 → 03/88				**FCP541**	LUCAS/TRW	
2.3 VR5	110	01/97 →	**FCP1323**	ATE				
2.3 VR5	110	01/97 →				**FCP541**	LUCAS/TRW	
2.5 TDi Syncro, Variant 24V	110	12/98 →	**FCP1323**	ATE				

For material availability see page 16-18 / Per la disponibilità materiali vedere a pagina 16-18

	kW				NOTE			NOTE
...VOLKSWAGEN								
...PASSAT								
2.5 TDi Syncro, Variant 24V	110	12/98 →				FCP541	LUCAS/TRW	
2.8 V6 30V	142	01/97 →	FCP1289	LUCAS/TRW				
2.8 V6 30V	142	01/97 →	FCP1323	ATE				
2.8 V6 30V	142	01/97 →				FCP541	LUCAS/TRW	
2.8 VR6	128	04/88 → 10/93	FCP775	LUCAS/TRW				
2.8 VR6	128	04/88 → 10/93				FCP541	LUCAS/TRW	
2.8 VR6	128	10/93 → 10/96	FCP590	ATE				
2.8 VR6	128	10/93 → 10/96				FCP541	LUCAS/TRW	
2.9 VR6	135	10/93 → 11/96	FCP590	ATE				
PASSAT (362)								
1.4 TSI	90	08/10 →	FCP4425	LUCAS/TRW				
1.4 TSI	90	08/10 →				FCP1636	LUCAS/TRW	
1.4 TSI	90	08/10 →				FCP4316	BOSCH	
1.6 TDI	77	08/10 →	FCP4425	LUCAS/TRW				
1.6 TDI	77	08/10 →				FCP1636	LUCAS/TRW	
1.6 TDI	77	08/10 →				FCP4316	BOSCH	
1.8 TSI	118	08/10 →	FCP4425	LUCAS/TRW				
1.8 TSI	118	08/10 →				FCP1636	LUCAS/TRW	
1.8 TSI	118	08/10 →				FCP4316	BOSCH	
2.0 TDI	100	08/10 →	FCP4425	LUCAS/TRW				
2.0 TDI	100	08/10 →				FCP1636	LUCAS/TRW	
2.0 TDI	100	08/10 →				FCP4316	BOSCH	
2.0 TDI	103	08/10 →	FCP4425	LUCAS/TRW				
2.0 TDI	103	08/10 →				FCP1636	LUCAS/TRW	
2.0 TDI	103	08/10 →				FCP4316	BOSCH	
2.0 TDI	125	08/10 →	FCP4425	LUCAS/TRW				
2.0 TDI	125	08/10 →				FCP1636	LUCAS/TRW	
2.0 TDI	125	08/10 →				FCP4316	BOSCH	
2.0 TDI 4motion	103	08/10 →	FCP4425	LUCAS/TRW				
2.0 TDI 4motion	103	08/10 →				FCP1636	LUCAS/TRW	
2.0 TDI 4motion	103	08/10 →				FCP4316	BOSCH	
2.0 TDI 4motion	125	08/10 →	FCP4425	LUCAS/TRW				
2.0 TDI 4motion	125	08/10 →				FCP1636	LUCAS/TRW	
2.0 TDI 4motion	125	08/10 →				FCP4316	BOSCH	
2.0 TSI	155	11/10 →	FCP4425	LUCAS/TRW				
2.0 TSI	155	11/10 →				FCP1636	LUCAS/TRW	
2.0 TSI	155	11/10 →				FCP4316	BOSCH	
3.6 FSI 4motion	220	01/11 →	FCP4425	LUCAS/TRW				
3.6 FSI 4motion	220	01/11 →				FCP1636	LUCAS/TRW	
3.6 FSI 4motion	220	01/11 →				FCP4316	BOSCH	
PASSAT (3A2, 35I)								
1.8	79	04/88 → 07/93	FCP774	LUCAS/TRW				
1.8	79	04/88 → 07/93				FCP541	LUCAS/TRW	
1.8	82	04/88 → 07/92	FCP774	LUCAS/TRW				
1.8	82	04/88 → 07/92				FCP541	LUCAS/TRW	
1.8 16V	100	04/88 → 12/89	FCP774	LUCAS/TRW				
1.8 16V	100	04/88 → 12/89				FCP541	LUCAS/TRW	
PASSAT (3B2)								
1.9 TDI	74	02/00 → 11/00	FCP1717	ATE	PR 1LT(312mm disc)			
1.9 TDI	74	02/00 → 11/00				FCP1491	LUCAS/TRW	
2.0	88	04/00 → 11/00	FCP1717	ATE	PR 1LT(312mm disc)			
2.0	88	04/00 → 11/00				FCP1491	LUCAS/TRW	
2.0 4motion	88	04/00 → 11/00	FCP1717	ATE	PR 1LT(312mm disc)			
2.0 4motion	88	04/00 → 11/00				FCP1491	LUCAS/TRW	
PASSAT (3B3)								
1.6	75	11/00 → 05/05	FCP1717	ATE	PR 1LT(312mm disc)			
1.6	75	11/00 → 05/05				FCP1491	LUCAS/TRW	
1.8	92	03/03 → 03/05	FCP1717	ATE	PR 1LT(312mm disc)			
1.8	92	03/03 → 03/05				FCP1491	LUCAS/TRW	
1.8 T	125	02/01 → 05/05	FCP1717	ATE	PR 1LT(312mm disc)			
1.8 T	125	02/01 → 05/05				FCP1491	LUCAS/TRW	
1.8 T 20V	110	11/00 → 05/05	FCP1717	ATE	PR 1LT(312mm disc)			
1.8 T 20V	110	11/00 → 05/05				FCP1491	LUCAS/TRW	
1.8 T 4motion	125	03/01 → 05/05	FCP1717	ATE	PR 1LT(312mm disc)			
1.8 T 4motion	125	03/01 → 05/05				FCP1491	LUCAS/TRW	
1.9 TDI	74	11/00 → 05/05	FCP1717	ATE				
1.9 TDI	74	11/00 → 05/05				FCP1491	LUCAS/TRW	
1.9 TDI	96	11/00 → 05/05	FCP1717	ATE				
1.9 TDI	96	11/00 → 05/05				FCP1491	LUCAS/TRW	
1.9 TDI 4motion	96	11/00 → 05/05	FCP1717	ATE				
1.9 TDI 4motion	96	11/00 → 05/05				FCP1491	LUCAS/TRW	
2.0	85	11/00 → 05/05	FCP1717	ATE				
2.0	85	11/00 → 05/05				FCP1491	LUCAS/TRW	

For material availability see page 16-18 / Per la disponibilità materiali vedere a pagina 16-18

			kW								
...VOLKSWAGEN						NOTE				NOTE
...PASSAT (3B3)										
2.0	96	11/01 → 05/05	**FCP1717**	ATE					
2.0	96	11/01 → 05/05				**FCP1491**	LUCAS/TRW	
2.0 4motion	85	11/00 → 05/05	**FCP1717**	ATE					
2.0 4motion	85	11/00 → 05/05				**FCP1491**	LUCAS/TRW	
2.0 TDI	100	12/03 → 05/05	**FCP1717**	ATE					
2.0 TDI	100	12/03 → 05/05				**FCP1491**	LUCAS/TRW	
2.3 V5	125	11/00 → 05/05	**FCP1717**	ATE	PR 1LT(312mm disc)				
2.3 V5	125	11/00 → 05/05				**FCP1491**	LUCAS/TRW	
2.3 V5 4motion	125	11/00 → 05/05	**FCP1717**	ATE	PR 1LT(312mm disc)				
2.3 V5 4motion	125	11/00 → 05/05				**FCP1491**	LUCAS/TRW	
2.5 TDI	110	11/00 → 05/05	**FCP1717**	ATE	PR 1LT(312mm disc)				
2.5 TDI	110	11/00 → 05/05				**FCP1491**	LUCAS/TRW	
2.5 TDI	120	05/03 → 05/05	**FCP1717**	ATE					
2.5 TDI	120	05/03 → 05/05				**FCP1491**	LUCAS/TRW	
2.5 TDI 4motion	110	11/00 → 05/05	**FCP1717**	ATE					
2.5 TDI 4motion	110	11/00 → 05/05				**FCP1491**	LUCAS/TRW	
2.5 TDI 4motion	132	01/03 → 05/05	**FCP1717**	ATE					
2.5 TDI 4motion	132	01/03 → 05/05				**FCP1491**	LUCAS/TRW	
2.8 4motion	142	11/00 → 05/05	**FCP1717**	ATE					
2.8 4motion	142	11/00 → 05/05				**FCP1491**	LUCAS/TRW	
4.0 W8 4motion	202	09/01 → 09/04	**FCP1001**	ATE	PR 1LC				
4.0 W8 4motion	202	09/01 → 09/04				**FCP1491**	LUCAS/TRW	
PASSAT (3C2)										
2.0 FSI	147	07/05 → 07/10	**FCP1765**	ATE					
2.0 FSI	147	07/05 → 07/10				**FCP1636**	LUCAS/TRW	
3.2 FSI 4motion	184	11/05 → 07/10	**FCP1765**	ATE	For PR code:1LK/1LM				
3.2 FSI 4motion	184	11/05 → 07/10	**FCP4223**	ATE					
3.2 FSI 4motion	184	11/05 → 07/10				**FCP1636**	LUCAS/TRW	For PR code:2EA
3.6 FSI	206	06/05 → 07/10	**FCP1765**	ATE					
3.6 FSI	206	06/05 → 07/10	**FCP4223**	ATE					
3.6 FSI	206	06/05 → 07/10				**FCP1636**	LUCAS/TRW	
3.6 FSI 4motion	206	09/05 → 07/10	**FCP1765**	ATE					
3.6 FSI 4motion	206	09/05 → 07/10	**FCP4223**	ATE					
3.6 FSI 4motion	206	09/05 → 07/10				**FCP1636**	LUCAS/TRW	
3.6 R36 4motion	220	04/07 → 07/10	**FCP1765**	ATE	For PR code:1LK/1LM				
3.6 R36 4motion	220	04/07 → 07/10	**FCP4223**	ATE					
3.6 R36 4motion	220	04/07 → 07/10				**FCP1636**	LUCAS/TRW	For PR code:2EL
PASSAT (3G2)										
1.4 GTE Hybrid	115	11/14 →	**FCP4433**	LUCAS/TRW	Pr Number 1ZA				
1.4 GTE Hybrid	115	11/14 →	**FCP4425**	LUCAS/TRW	Pr Number 1LA				
1.4 GTE Hybrid	115	11/14 →				**FCP4697**	ATE	For PR code:1KU/1KZ
1.4 TSI	110	11/14 →	**FCP4433**	LUCAS/TRW					
1.4 TSI	110	11/14 →				**FCP4697**	ATE	For PR code:1KU/1KZ
1.4 TSI	92	11/14 →	**FCP4433**	LUCAS/TRW					
1.4 TSI	92	11/14 →				**FCP4697**	ATE	For PR code:1KU/1KZ
1.4 TSI 4motion	110	02/15 →	**FCP4433**	LUCAS/TRW	Pr Number 1ZA				
1.4 TSI 4motion	110	02/15 →	**FCP4425**	LUCAS/TRW	Pr Number 1LA				
1.4 TSI 4motion	110	02/15 →				**FCP4697**	ATE	For PR code:1KU/1KZ
1.6 TDI	88	08/14 →	**FCP4433**	LUCAS/TRW					
1.6 TDI	88	08/14 →				**FCP4697**	ATE	For PR code:1KU/1KZ
1.8 TSI	132	02/15 →	**FCP4433**	LUCAS/TRW	Pr number 1ZA				
1.8 TSI	132	02/15 →	**FCP4425**	LUCAS/TRW	Pr Number 1LA				
1.8 TSI	132	02/15 →				**FCP4697**	ATE	For PR code:1KU/1KZ
2.0 TDI	110	11/14 →	**FCP4433**	LUCAS/TRW					
2.0 TDI	110	11/14 →				**FCP4697**	ATE	For PR code:1KU/1KZ
2.0 TDI	140	11/14 →	**FCP4433**	LUCAS/TRW	Pr Number 1ZA				
2.0 TDI	140	11/14 →	**FCP4425**	LUCAS/TRW	Pr Number 1LA				
2.0 TDI	140	11/14 →				**FCP4697**	ATE	For PR code:1KU/1KZ
2.0 TDI 4motion	110	02/15 →	**FCP4433**	LUCAS/TRW	1ZA				
2.0 TDI 4motion	110	02/15 →	**FCP4425**	LUCAS/TRW	Pr Number 1LA				
2.0 TDI 4motion	110	02/15 →				**FCP4697**	ATE	For PR code:1KU/1KZ
2.0 TDI 4motion	140	11/14 →	**FCP4433**	LUCAS/TRW	Pr Number 1ZA				
2.0 TDI 4motion	140	11/14 →	**FCP4425**	LUCAS/TRW	Pr Number 1LA				
2.0 TDI 4motion	140	11/14 →				**FCP4697**	ATE	For PR code:1KU/1KZ
2.0 TDI 4motion	176	08/14 →	**FCP4433**	LUCAS/TRW					
2.0 TDI 4motion	176	08/14 →				**FCP4697**	ATE	For PR code:1KU/1KZ
2.0 TSI	162	02/15 →	**FCP4433**	LUCAS/TRW	Pr Number 1ZA				
2.0 TSI	162	02/15 →	**FCP4425**	LUCAS/TRW	Pr Number 1LA				
2.0 TSI	162	02/15 →				**FCP4697**	ATE	For PR code:1KU/1KZ
2.0 TSI 4motion	206	02/15 →	**FCP4433**	LUCAS/TRW	Pr Number 1ZA,1ZC				
2.0 TSI 4motion	206	02/15 →	**FCP4425**	LUCAS/TRW	Pr Number 1LA				
2.0 TSI 4motion	206	05/15 →				**FCP4697**	ATE	For PR code:1KU/1KZ/2EA

For material availability see page 16-18 / Per la disponibilità materiali vedere a pagina 16-18

FERODO RACING
Updated on November 2020

...VOLKSWAGEN

		kW				NOTE			NOTE
PASSAT (I)									
1.3 Auto, SW Estate		44	01/84 → 07/85	**FCP419**	KELGATE				
1.3 i Auto, SW Estate		44	11/79 → 12/83	**FCP392**	KELGATE				
1.3 i Saloon		40, 44	01/73 → 10/79	**FCP105**	ATE				
1.3 i Saloon		40, 44	11/79 → 12/83	**FCP419**	KELGATE				
1.5 i		63	01/73 → 10/79	**FCP105**	ATE				
1.6 D Saloon		40, 51	01/84 → 03/88	**FCP419**	KELGATE				
1.6 D Saloon		40, 51	04/88 → 08/89	**FCP775**	LUCAS/TRW				
1.6 D SW Estate		40, 51	01/84 → 03/88	**FCP419**	KELGATE				
1.6 i			01/73 → 10/79	**FCP105**	ATE				
1.6 i		55, 63	11/79 → 12/83	**FCP419**	KELGATE				
1.6 i Auto, SW Estate		55	11/79 → 12/83	**FCP392**	KELGATE				
1.6 i Auto, SW Estate		63	11/79 → 12/83	**FCP392**	KELGATE				
1.6 i Auto, SW Estate		81	11/79 → 12/83	**FCP392**	KELGATE				
1.6 i GLi Auto, SW Estate		81	11/79 → 12/83	**FCP392**	KELGATE				
1.6 Saloon		51, 53	01/84 → 03/88	**FCP419**	KELGATE				
1.6 SW Estate		55	01/84 → 03/88	**FCP419**	KELGATE				
1.6 TD Saloon		51, 59	01/84 → 03/88	**FCP419**	KELGATE				
1.6 TD SW Estate		40, 51	01/84 → 03/88	**FCP419**	KELGATE				
1.8 i Auto, SW Estate			11/79 → 12/83	**FCP419**	KELGATE				
1.8 i Saloon			11/79 → 12/83	**FCP419**	KELGATE				
1.8 Saloon		66, 68	01/84 → 03/88	**FCP419**	KELGATE				
1.8 SW Estate		66	01/84 → 03/88	**FCP419**	KELGATE				
1.9			01/88 → 03/88	**FCP392**	KELGATE				
1.9 i GL5			09/81 → 12/83	**FCP392**	KELGATE				
2.0		84	01/84 → 03/88	**FCP392**	KELGATE				
2.0 GL5			08/83 → 12/83	**FCP392**	KELGATE				
2.2		85, 100	01/84 → 03/88	**FCP392**	KELGATE				
2.2 GT5			10/80 → 03/88	**FCP774**	LUCAS/TRW				
2.2 GT5			10/80 → 03/88				**FCP541**	LUCAS/TRW	
PASSAT (II)									
1.6 Saloon		53, 55	04/88 → 09/91	**FCP419**	KELGATE				
1.6 Saloon		53, 55	04/88 → 09/91	**FCP775**	LUCAS/TRW				
1.6 Saloon, Variant		74	07/94 → 08/96	**FCP774**	LUCAS/TRW				
1.6 Saloon, Variant		74	07/94 → 08/96	**FCP775**	LUCAS/TRW				
1.6 TD Saloon, Variant		51, 59	04/88 → 09/93	**FCP775**	LUCAS/TRW				
1.6 Variant		53, 55	04/88 → 09/91	**FCP775**	LUCAS/TRW				
1.8 GT, GL Saloon		100	04/88 → 10/93	**FCP774**	LUCAS/TRW				
1.8 GT, GL Saloon		100	04/88 → 10/93				**FCP541**	LUCAS/TRW	
1.8 GT, GL Saloon		79, 82	04/88 → 10/93	**FCP774**	LUCAS/TRW				
1.8 GT, GL Saloon		79, 82	04/88 → 10/93				**FCP541**	LUCAS/TRW	
1.8 i G60 Syncro, Saloon, Variant		118	08/88 → 08/96	**FCP775**	LUCAS/TRW				
1.8 i G60 Syncro, Saloon, Variant		118	08/88 → 08/96				**FCP541**	LUCAS/TRW	
1.8 Saloon, Variant		55, 66	04/88 → 08/96	**FCP775**	LUCAS/TRW				
1.9 TDi Saloon, Variant		66	10/93 → 08/96	**FCP774**	LUCAS/TRW				
1.9 TDi Saloon, Variant		66	10/93 → 08/96	**FCP775**	LUCAS/TRW				
1.9 TDi Saloon, Variant		81	03/96 → 08/96	**FCP775**	LUCAS/TRW				
2.0 Saloon, Variant		79, 85	02/90 → 08/96	**FCP774**	LUCAS/TRW				
2.0 Saloon, Variant		79, 85	02/90 → 08/96				**FCP541**	LUCAS/TRW	
2.8 i VR6 Saloon, Variant		128	06/91 → 10/93	**FCP775**	LUCAS/TRW				
2.8 i VR6 Saloon, Variant		128	06/91 → 10/93				**FCP541**	LUCAS/TRW	
PASSAT (III)									
1.6 i Saloon, Variant		74	10/96 → 10/00	**FCP1289**	LUCAS/TRW				
1.8 i Saloon, Variant 20V		92	10/96 → 11/00	**FCP1289**	LUCAS/TRW				
1.9 TDi Saloon, Variant		66, 74	10/96 → 11/00	**FCP1289**	LUCAS/TRW				
PASSAT ALLTRACK (365)									
1.8 TSI		112	01/12 →	**FCP4425**	LUCAS/TRW	PR 1LA,1LB			
1.8 TSI		112	01/12 →				**FCP1636**	LUCAS/TRW	
1.8 TSI		112	01/12 →				**FCP4316**	BOSCH	
1.8 TSI		118	01/12 →	**FCP4425**	LUCAS/TRW	PR 1LA,1LB			
1.8 TSI		118	01/12 →				**FCP1636**	LUCAS/TRW	
1.8 TSI		118	01/12 →				**FCP4316**	BOSCH	
2.0 TDI		103	01/12 →	**FCP4425**	LUCAS/TRW	PR 1LA,1LB			
2.0 TDI		103	01/12 →				**FCP1636**	LUCAS/TRW	
2.0 TDI		103	01/12 →				**FCP4316**	BOSCH	
2.0 TDI 4motion		103	01/12 →	**FCP4425**	LUCAS/TRW	PR 1LA,1LB			
2.0 TDI 4motion		103	01/12 →				**FCP1636**	LUCAS/TRW	
2.0 TDI 4motion		103	01/12 →				**FCP4316**	BOSCH	
2.0 TDI 4motion		125	01/12 →	**FCP4425**	LUCAS/TRW	PR 1LA,1LB			
2.0 TDI 4motion		125	01/12 →				**FCP1636**	LUCAS/TRW	
2.0 TDI 4motion		125	01/12 →				**FCP4316**	BOSCH	
2.0 TDI 4motion		130	01/13 →	**FCP4425**	LUCAS/TRW	PR 1LA,1LB			
2.0 TDI 4motion		130	01/13 →				**FCP1636**	LUCAS/TRW	
2.0 TDI 4motion		130	01/13 →				**FCP4316**	BOSCH	
2.0 TSI 4motion		155	01/12 →	**FCP4425**	LUCAS/TRW	PR 1LA,1LB			

For material availability see page 16-18 / Per la disponibilità materiali vedere a pagina 16-18

...VOLKSWAGEN						NOTE			NOTE
...PASSAT ALLTRACK (365)									
2.0 TSI 4motion	155	01/12 →					**FCP1636**	LUCAS/TRW	
2.0 TSI 4motion	155	01/12 →					**FCP4316**	BOSCH	
PASSAT ALLTRACK (3G5)									
2.0 TDI 4motion	110	11/14 →	**FCP4433**	LUCAS/TRW	Pr Number 1ZA				
2.0 TDI 4motion	110	11/14 →	**FCP4425**	LUCAS/TRW	Pr Number 1LA				
2.0 TDI 4motion	140	11/14 →	**FCP4433**	LUCAS/TRW	Pr Number 1ZA				
2.0 TDI 4motion	140	11/14 →	**FCP4425**	LUCAS/TRW	Pr Number 1LA				
2.0 TDI 4motion	140	11/14 →					**FCP4697**	ATE	For PR code:1KU/1KZ
2.0 TDI 4motion	176	11/14 →	**FCP4433**	LUCAS/TRW	Pr Number 1ZA				
2.0 TDI 4motion	176	11/14 →	**FCP4425**	LUCAS/TRW	Pr Number 1LA				
2.0 TDI 4motion	176	11/14 →					**FCP4697**	ATE	For PR code:1KU/1KZ
2.0 TSI 4motion	162	11/14 →	**FCP4433**	LUCAS/TRW	Pr Number 1ZA				
2.0 TSI 4motion	162	11/14 →	**FCP4425**	LUCAS/TRW	Pr Number 1LA				
2.0 TSI 4motion	162	11/14 →					**FCP4697**	ATE	For PR code:1KU/1KZ
PASSAT CC (357)									
3.6 FSI 4motion	206	06/08 → 01/12	**FCP1765**	ATE					
3.6 FSI 4motion	206	06/08 → 01/12	**FCP4425**	LUCAS/TRW					
3.6 FSI 4motion	206	06/08 → 01/12	**FCP4223**	ATE					
3.6 FSI 4motion	206	06/08 → 01/12					**FCP1636**	LUCAS/TRW	
3.6 FSI 4motion	220	06/08 → 05/10	**FCP1765**	ATE	Disc Diam mm:345,For PR code:1LK				
3.6 FSI 4motion	220	06/08 → 05/10	**FCP4425**	LUCAS/TRW	For PR code:1LA				
3.6 FSI 4motion	220	06/08 → 05/10	**FCP4223**	ATE					
3.6 FSI 4motion	220	06/08 → 05/10					**FCP1636**	LUCAS/TRW	For PR code:2EA
PASSAT Variant (33B)									
1.8 Syncro	66	01/86 → 03/88	**FCP774**	LUCAS/TRW					
1.8 Syncro	66	01/86 → 03/88					**FCP541**	LUCAS/TRW	
PASSAT Variant (365)									
1.4 TSI	90	08/10 →	**FCP4425**	LUCAS/TRW					
1.4 TSI	90	08/10 →					**FCP1636**	LUCAS/TRW	
1.4 TSI	90	08/10 →					**FCP4316**	BOSCH	
1.6 TDI	77	08/10 →	**FCP4425**	LUCAS/TRW					
1.6 TDI	77	08/10 →					**FCP1636**	LUCAS/TRW	
1.6 TDI	77	08/10 →					**FCP4316**	BOSCH	
1.8 TSI	118	08/10 →	**FCP4425**	LUCAS/TRW					
1.8 TSI	118	08/10 →					**FCP1636**	LUCAS/TRW	
1.8 TSI	118	08/10 →					**FCP4316**	BOSCH	
2.0 TDI	103	08/10 →	**FCP4425**	LUCAS/TRW					
2.0 TDI	103	08/10 →					**FCP1636**	LUCAS/TRW	
2.0 TDI	103	08/10 →					**FCP4316**	BOSCH	
2.0 TDI	125	08/10 →	**FCP4425**	LUCAS/TRW					
2.0 TDI	125	08/10 →					**FCP1636**	LUCAS/TRW	
2.0 TDI	125	08/10 →					**FCP4316**	BOSCH	
2.0 TDI 4motion	103	08/10 →	**FCP4425**	LUCAS/TRW					
2.0 TDI 4motion	103	08/10 →					**FCP1636**	LUCAS/TRW	
2.0 TDI 4motion	103	08/10 →					**FCP4316**	BOSCH	
2.0 TDI 4motion	125	08/10 →	**FCP4425**	LUCAS/TRW					
2.0 TDI 4motion	125	08/10 →					**FCP1636**	LUCAS/TRW	
2.0 TDI 4motion	125	08/10 →					**FCP4316**	BOSCH	
2.0 TSI	155	11/10 →	**FCP4425**	LUCAS/TRW					
2.0 TSI	155	11/10 →					**FCP1636**	LUCAS/TRW	
2.0 TSI	155	11/10 →					**FCP4316**	BOSCH	
3.6 FSI 4motion	220	01/11 →	**FCP4425**	LUCAS/TRW					
3.6 FSI 4motion	220	01/11 →					**FCP1636**	LUCAS/TRW	
3.6 FSI 4motion	220	01/11 →					**FCP4316**	BOSCH	
PASSAT Variant (3A5, 35I)									
1.8	66	02/88 → 05/97					**FCP541**	LUCAS/TRW	
1.8	79	04/88 → 07/90	**FCP774**	LUCAS/TRW					
1.8	79	04/88 → 07/90					**FCP541**	LUCAS/TRW	
1.8	82	04/88 → 07/92	**FCP774**	LUCAS/TRW					
1.8	82	04/88 → 07/92					**FCP541**	LUCAS/TRW	
1.8 16V	100	04/88 → 12/89	**FCP774**	LUCAS/TRW					
1.8 16V	100	04/88 → 12/89					**FCP541**	LUCAS/TRW	
PASSAT Variant (3B6)									
1.6	75	11/00 → 05/05	**FCP1717**	ATE	PR 1LT(312mm disc)				
1.6	75	11/00 → 05/05					**FCP1491**	LUCAS/TRW	
1.8 4motion	125	03/01 → 05/05	**FCP1717**	ATE	PR 1LT(312mm disc)				
1.8 4motion	125	03/01 → 05/05					**FCP1491**	LUCAS/TRW	
1.8 T	125	05/02 → 08/05	**FCP1717**	ATE	PR 1LT(312mm disc)				
1.8 T	125	05/02 → 08/05					**FCP1491**	LUCAS/TRW	
1.8 T 20V	110	11/00 → 05/05	**FCP1717**	ATE	PR 1LT(312mm disc)				

For material availability see page 16-18 / Per la disponibilità materiali vedere a pagina 16-18

FERODO RACING
Updated on November 2020

...VOLKSWAGEN

...PASSAT Variant (3B6)

	kW				NOTE			NOTE
1.8 T 20V	110	11/00 → 05/05				FCP1491	LUCAS/TRW	
1.9 TDI	74	11/00 → 05/05	FCP1717	ATE	PR 1LT(312mm disc)			
1.9 TDI	74	11/00 → 05/05				FCP1491	LUCAS/TRW	
1.9 TDI	96	11/00 → 05/05	FCP1717	ATE	PR 1LT(312mm disc)			
1.9 TDI	96	11/00 → 05/05				FCP1491	LUCAS/TRW	
1.9 TDI 4motion	96	11/00 → 05/05	FCP1717	ATE	PR 1LT(312mm disc)			
1.9 TDI 4motion	96	11/00 → 05/05				FCP1491	LUCAS/TRW	
2.0	85	11/00 → 05/05	FCP1717	ATE	PR 1LT(312mm disc)			
2.0	85	11/00 → 05/05				FCP1491	LUCAS/TRW	
2.0	96	11/01 → 05/05	FCP1717	ATE				
2.0	96	11/01 → 05/05				FCP1491	LUCAS/TRW	
2.0 4motion	85	11/00 → 05/05	FCP1717	ATE	PR 1LT(312mm disc)			
2.0 4motion	85	11/00 → 05/05				FCP1491	LUCAS/TRW	
2.0 TDI	100	12/03 → 05/05	FCP1717	ATE				
2.0 TDI	100	12/03 → 05/05				FCP1491	LUCAS/TRW	
2.3 VR5	125	11/00 → 05/05	FCP1717	ATE	PR 1LT(312mm disc)			
2.3 VR5	125	11/00 → 05/05				FCP1491	LUCAS/TRW	
2.3 VR5 4motion	125	11/00 → 05/05	FCP1717	ATE	PR 1LT(312mm disc)			
2.3 VR5 4motion	125	11/00 → 05/05				FCP1491	LUCAS/TRW	
2.5 TDI	110	11/00 → 05/05	FCP1717	ATE	PR 1LT(312mm disc)			
2.5 TDI	110	11/00 → 05/05				FCP1491	LUCAS/TRW	
2.5 TDI	120	05/03 → 05/05	FCP1717	ATE				
2.5 TDI	120	05/03 → 05/05				FCP1491	LUCAS/TRW	
2.5 TDI 4motion	110	11/00 → 05/05	FCP1717	ATE	PR 1LT(312mm disc)			
2.5 TDI 4motion	110	11/00 → 05/05				FCP1491	LUCAS/TRW	
2.5 TDI 4motion	132	01/03 → 05/05	FCP1717	ATE				
2.5 TDI 4motion	132	01/03 → 05/05				FCP1491	LUCAS/TRW	
2.8 4motion	142	11/00 → 05/05	FCP1717	ATE	PR 1LT(312mm disc)			
2.8 4motion	142	11/00 → 05/05				FCP1491	LUCAS/TRW	
4.0 W8 4motion	202	09/01 → 09/04	FCP1001	ATE	PR 1LC			
4.0 W8 4motion	202	09/01 → 09/04				FCP1491	LUCAS/TRW	

PASSAT Variant (3C5)

2.0	100	09/06 → 12/07	FCP1641	ATE				
2.0	100	09/06 → 12/07	FCP4223	ATE				
2.0	100	09/06 → 12/07				FCP1636	LUCAS/TRW	
2.0	86	09/06 → 12/08	FCP1641	ATE				
2.0	86	09/06 → 12/08	FCP4223	ATE				
2.0	86	09/06 → 12/08				FCP1636	LUCAS/TRW	
3.2 FSI 4motion	184	11/05 → 11/10	FCP1765	ATE	For PR code:1LK/1LM			
3.2 FSI 4motion	184	11/05 → 11/10	FCP4223	ATE				
3.2 FSI 4motion	184	11/05 → 11/10				FCP1636	LUCAS/TRW	For PR code:2EA
3.6 FSI	206	09/05 → 11/10	FCP1765	ATE				
3.6 FSI	206	09/05 → 11/10	FCP4223	ATE				
3.6 FSI	206	09/05 → 11/10				FCP1636	LUCAS/TRW	
3.6 FSI 4motion	206	09/05 → 11/10	FCP1765	ATE				
3.6 FSI 4motion	206	09/05 → 11/10	FCP4223	ATE				
3.6 FSI 4motion	206	09/05 → 11/10				FCP1636	LUCAS/TRW	
3.6 R36 4motion	220	04/07 → 11/10	FCP1765	ATE	For PR code:1LK/1LM			
3.6 R36 4motion	220	04/07 → 11/10	FCP4223	ATE				
3.6 R36 4motion	220	04/07 → 11/10				FCP1636	LUCAS/TRW	For PR code:2EL

PASSAT Variant (3G5)

1.4 GTE Hybrid	115	11/14 →	FCP4433	LUCAS/TRW	Pr Number 1ZA			
1.4 GTE Hybrid	115	11/14 →	FCP4425	LUCAS/TRW	Pr Number 1LA			
1.4 GTE Hybrid	115	11/14 →				FCP4697	ATE	For PR code:1KU/1KZ
1.4 TSI	110	11/14 →	FCP4433	LUCAS/TRW				
1.4 TSI	110	11/14 →				FCP4697	ATE	For PR code:1KU/1KZ
1.4 TSI	92	11/14 →	FCP4433	LUCAS/TRW				
1.4 TSI	92	11/14 →				FCP4697	ATE	For PR code:1KU/1KZ
1.4 TSI 4motion	110	02/15 →	FCP4433	LUCAS/TRW	Pr Number 1ZA			
1.4 TSI 4motion	110	02/15 →	FCP4425	LUCAS/TRW	Pr Number 1LA			
1.4 TSI 4motion	110	02/15 →				FCP4697	ATE	For PR code:1KU/1KZ
1.6 TDI	88	08/14 →	FCP4433	LUCAS/TRW				
1.6 TDI	88	08/14 →				FCP4697	ATE	For PR code:1KU/1KZ
1.8 TSI	132	02/15 →	FCP4433	LUCAS/TRW	Pr Number 1ZA			
1.8 TSI	132	02/15 →	FCP4425	LUCAS/TRW	Pr Number 1LA			
1.8 TSI	132	02/15 →				FCP4697	ATE	For PR code:1KU/1KZ
2.0 TDI	110	11/14 →	FCP4433	LUCAS/TRW				
2.0 TDI	110	11/14 →				FCP4697	ATE	For PR code:1KU/1KZ
2.0 TDI	140	11/14 →	FCP4433	LUCAS/TRW				
2.0 TDI	140	11/14 →				FCP4697	ATE	For PR code:1KU/1KZ
2.0 TDI 4motion	110	02/15 →	FCP4433	LUCAS/TRW	Pr Number 1ZA			
2.0 TDI 4motion	110	02/15 →	FCP4425	LUCAS/TRW	Pr Number 1LA			
2.0 TDI 4motion	110	02/15 →				FCP4697	ATE	For PR code:1KU/1KZ
2.0 TDI 4motion	140	11/14 →	FCP4433	LUCAS/TRW	Pr Number 1ZA			
2.0 TDI 4motion	140	11/14 →	FCP4425	LUCAS/TRW	Pr Number 1LA			

For material availability see page 16-18 / Per la disponibilità materiali vedere a pagina 16-18

			kW								
...VOLKSWAGEN						NOTE				NOTE
...PASSAT Variant (3G5)										
2.0 TDI 4motion		140	11/14 →				FCP4697	ATE	For PR code:1KU/1KZ
2.0 TDI 4motion		176	08/14 →	FCP4433	LUCAS/TRW				
2.0 TDI 4motion		176	08/14 →				FCP4697	ATE	For PR code:1KU/1KZ
2.0 TSI		162	02/15 →	FCP4433	LUCAS/TRW	Pr Number 1ZA			
2.0 TSI		162	02/15 →	FCP4425	LUCAS/TRW	Pr Number 1LA			
2.0 TSI		162	02/15 →				FCP4697	ATE	For PR code:1KU/1KZ
2.0 TSI 4motion		206	05/15 →	FCP4433	LUCAS/TRW	Pr Number 1ZA,1ZC			
2.0 TSI 4motion		206	05/15 →	FCP4425	LUCAS/TRW	Pr Number 1LA			
2.0 TSI 4motion		206	05/15 →				FCP4697	ATE	For PR code:1KU/1KZ/2EA
PHAETON (3D_)									
6.0 W12 4motion		309	04/02 →	FCP1664	BREMBO	18 inch wheel			
Polo									
0.9			01/85 → 12/90	FCP385	KELGATE				
0.9		25, 29	01/75 → 12/84	FCP105	ATE				
1.0		29	08/78 → 12/84	FCP105	ATE				
1.0		29, 33	01/85 → 12/86	FCP385	KELGATE				
1.0		29, 33	01/85 → 12/86	FCP419	KELGATE				
1.0		29, 33	01/87 → 08/90	FCP392	KELGATE				
1.1		37, 44	01/75 → 12/84	FCP105	ATE				
1.3		43, 44	01/75 → 12/78	FCP105	ATE				
1.3		44	08/78 → 12/84	FCP105	ATE				
1.3		55	08/78 → 12/84	FCP105	ATE				
1.3 G40		85	05/91 → 09/94	FCP392	KELGATE				
1.3 G40		85	05/91 → 09/94				FCP541	LUCAS/TRW	
1.3 GT		40, 56	01/90 → 08/94	FCP419	KELGATE				
1.3 GT		40, 56	01/90 → 08/94				FCP541	LUCAS/TRW	
1.6 Saloon		55, 74	01/97 →	FCP1312	LUCAS/TRW				
1.9 TDi Saloon		66	01/97 →	FCP1312	LUCAS/TRW				
1.9 TDi Saloon		66	01/97 →				FCP1312	LUCAS/TRW	
Polo (6R_)									
1.2		44	06/09 →	FCP1094	ATE	PR: 1ZG,1LR,1ZJ			
1.2		44	06/09 →	FCP1641	ATE	PR: 1LN,1ZC,1ZD			
1.2		44	06/09 →				FCP1491	LUCAS/TRW	PR: 1KK,1KT,1KV,2EJ
1.2		51	06/09 →	FCP1094	ATE	PR: 1ZG,1LR,1ZJ			
1.2		51	06/09 →	FCP1641	ATE	PR: 1LN,1ZC,1ZD			
1.2		51	06/09 →				FCP1491	LUCAS/TRW	PR: 1KK,1KT,1KV,2EJ
1.2 TDI		55	10/09 →	FCP1094	ATE	PR: 1ZG,1LR,1ZJ			
1.2 TDI		55	10/09 →	FCP1641	ATE	PR: 1LN,1ZC,1ZD			
1.2 TDI		55	10/09 →				FCP1491	LUCAS/TRW	PR: 1KK,1KT,1KV,2EJ
1.2 TSI		66	05/11 →	FCP1094	ATE	PR: 1ZG,1LR,1ZJ			
1.2 TSI		66	05/11 →	FCP1641	ATE	PR: 1LN,1ZC,1ZD			
1.2 TSI		66	05/11 →				FCP1491	LUCAS/TRW	PR: 1KK,1KT,1KV,2EJ
1.2 TSI		77	11/09 →	FCP1094	ATE	PR: 1ZG,1LR,1ZJ			
1.2 TSI		77	11/09 →	FCP1641	ATE	PR: 1LN,1ZC,1ZD			
1.2 TSI		77	11/09 →				FCP1491	LUCAS/TRW	PR: 1KK,1KT,1KV,2EJ
1.4		63	06/09 →	FCP1094	ATE	PR: 1ZG,1LR,1ZJ			
1.4		63	06/09 →	FCP1641	ATE	PR: 1LN,1ZC,1ZD			
1.4		63	06/09 →				FCP1491	LUCAS/TRW	PR: 1KK,1KT,1KV,2EJ
1.4 BiFuel		60	03/10 → 01/11	FCP1094	ATE	PR: 1ZG,1LR,1ZJ			
1.4 BiFuel		60	03/10 → 01/11	FCP1641	ATE	PR: 1LN,1ZC,1ZD			
1.4 BiFuel		60	03/10 → 01/11				FCP1491	LUCAS/TRW	PR: 1KK,1KT,1KV,2EJ
1.4 TSI		103	10/12 →	FCP1094	ATE	PR: 1ZG,1LR,1ZJ			
1.4 TSI		103	10/12 →	FCP1641	ATE	PR: 1LN,1ZC,1ZD			
1.4 TSI		103	10/12 →				FCP1491	LUCAS/TRW	PR: 1KK,1KT,1KV,2EJ
1.6 BiFuel		60	01/11 →	FCP1094	ATE	PR: 1ZG,1LR,1ZJ			
1.6 BiFuel		60	01/11 →	FCP1641	ATE	PR: 1LN,1ZC,1ZD			
1.6 BiFuel		60	01/11 →				FCP1491	LUCAS/TRW	PR: 1KK,1KT,1KV,2EJ
1.6 TDI		55	06/09 →	FCP1094	ATE	PR: 1ZG,1LR,1ZJ			
1.6 TDI		55	06/09 →	FCP1641	ATE	PR: 1LN,1ZC,1ZD			
1.6 TDI		55	06/09 →				FCP1491	LUCAS/TRW	PR: 1KK,1KT,1KV,2EJ
1.6 TDI		66	06/09 →	FCP1094	ATE	PR: 1ZG,1LR,1ZJ			
1.6 TDI		66	06/09 →	FCP1641	ATE	PR: 1LN,1ZC,1ZD			
1.6 TDI		66	06/09 →				FCP1491	LUCAS/TRW	PR: 1KK,1KT,1KV,2EJ
1.6 TDI		77	06/09 →	FCP1094	ATE	PR: 1ZG,1LR,1ZJ			
1.6 TDI		77	06/09 →	FCP1641	ATE	PR: 1LN,1ZC,1ZD			
1.6 TDI		77	06/09 →				FCP1491	LUCAS/TRW	PR: 1KK,1KT,1KV,2EJ
2.0 R WRC		162	08/13 →	FCP1094	ATE	PR: 1ZG,1LR,1ZJ			
2.0 R WRC		162	08/13 →	FCP1641	ATE	PR: 1LN,1ZC,1ZD			
2.0 R WRC		162	08/13 →				FCP1491	LUCAS/TRW	PR: 1KK,1KT,1KV,2EJ

For material availability see page 16-18 / Per la disponibilità materiali vedere a pagina 16-18

FERODO RACING
Updated on November 2020

...VOLKSWAGEN	kW				NOTE			NOTE
POLO (86C, 80)								
1.3 Cat	55	10/89 → 03/91	FCP385	KELGATE				
1.3 Cat	55	10/89 → 03/91	FCP419	KELGATE				
Polo (9N_)								
1.4 16V	55	10/01 → 05/08	FCP1419	LUCAS/TRW				
1.4 16V	74	10/01 → 05/08	FCP1419	LUCAS/TRW				
1.8 GTI	110	09/05 → 11/09	FCP1419	LUCAS/TRW	PR 1LN, 1ZD(+9U0),1ZH			
1.8 GTI Cup Edition	132	05/06 → 11/09	FCP1419	LUCAS/TRW	PR 1LN, 1ZD(+9U0),1ZH			
Polo (I)								
0.9	25, 29	08/78 → 09/81	FCP105	ATE				
0.9	25, 29	10/81 → 12/84	FCP105	ATE				
0.9 i		01/85 → 12/90	FCP385	KELGATE				
0.9 i	25, 29	01/75 → 07/78	FCP105	ATE				
1.0	29	08/78 → 12/84	FCP105	ATE				
1.0	29, 33	01/85 → 12/86	FCP385	KELGATE				
1.0	29, 33	01/85 → 12/86	FCP419	KELGATE				
1.0 i	29, 33	01/87 → 08/90	FCP392	KELGATE				
1.1	37, 44	08/78 → 09/81	FCP105	ATE				
1.1	37, 44	10/81 → 12/84	FCP105	ATE				
1.1 i	37, 44	01/75 → 07/78	FCP105	ATE				
1.3	43	08/78 → 12/84	FCP105	ATE				
1.3	44	08/78 → 12/84	FCP105	ATE				
1.3	55	08/78 → 12/84	FCP105	ATE				
1.3 i	40, 55	01/87 → 08/90	FCP392	KELGATE				
1.3 i	40, 56	09/90 → 09/94	FCP385	KELGATE				
1.3 i	43, 44	01/75 → 12/78	FCP105	ATE				
Polo (II)								
1.6 i GTi 16V	74	09/98 → 09/01	FCP1312	LUCAS/TRW				
Polo (II) Classic								
1.6 i	55	11/96 → 09/01	FCP774	LUCAS/TRW				
1.6 i	55	11/96 → 09/01	FCP1312	LUCAS/TRW				
1.6 i	74	11/96 → 09/01	FCP774	LUCAS/TRW				
1.6 i	74	11/96 → 09/01	FCP1312	LUCAS/TRW				
1.9 TDi	66, 81	09/96 → 09/01	FCP1312	LUCAS/TRW				
Polo (II) Variant								
1.6 i	55, 74	05/97 → 09/01	FCP774	LUCAS/TRW				
1.6 i	55, 74	05/97 → 09/01	FCP1312	LUCAS/TRW				
1.9 TDi	66, 81	05/97 → 09/01	FCP1312	LUCAS/TRW				
Polo (III)								
1.2 i	40	10/01 →	FCP1419	LUCAS/TRW				
1.2 i	40	10/01 →				FCP1491	LUCAS/TRW	
1.2 i	47	10/01 →	FCP1419	LUCAS/TRW				
1.2 i	47	10/01 →				FCP1491	LUCAS/TRW	
1.4 FSi	63	05/02 →	FCP1419	LUCAS/TRW				
1.4 FSi	63	05/02 →				FCP1491	LUCAS/TRW	
1.4 TDi	55	10/99 →	FCP1419	LUCAS/TRW				
1.4 TDi	55	10/01 →	FCP1419	LUCAS/TRW				
1.9 SDi	47	10/01 →	FCP1419	LUCAS/TRW				
1.9 TDi	74	10/01 →	FCP1419	LUCAS/TRW				
POLO CLASSIC (86C, 80)								
1.3	40	01/85 → 07/87	FCP385	KELGATE				
1.3	40	01/85 → 07/87	FCP419	KELGATE				
POLO Coupe (86C, 80)								
1.3 G40	85	01/87 → 08/90	FCP385	KELGATE				
1.3 G40	85	01/87 → 08/90	FCP419	KELGATE				
Polo Van								
1.0	33	01/86 → 07/95	FCP385	KELGATE				
1.3		01/86 → 07/95	FCP385	KELGATE				
1.4	35	01/86 → 07/95	FCP385	KELGATE				
1.4 60	35	07/95 →	FCP385	KELGATE				
1.6	55	01/86 → 07/95	FCP385	KELGATE				
1.6 64, 75, 100	55	07/95 →	FCP419	KELGATE				
1.9	47	01/86 → 07/95	FCP385	KELGATE				
1.9 64, 75, 100	47	07/95 →	FCP419	KELGATE				

For material availability see page 16-18 / Per la disponibilità materiali vedere a pagina 16-18

	kW				NOTE			NOTE
...VOLKSWAGEN								
Santana								
1.3	40	08/81 → 11/81	**FCP105**	ATE				
1.3	40	12/81 → 07/83	**FCP419**	KELGATE				
1.6 Auto	55	01/82 → 12/83	**FCP419**	KELGATE				
1.6 CX	55	01/84 → 01/85	**FCP419**	KELGATE				
1.6 D	40	08/81 → 12/84	**FCP419**	KELGATE				
1.6 Man	63	01/82 → 12/83	**FCP419**	KELGATE				
1.6 TD	40, 51	12/81 → 12/84	**FCP419**	KELGATE				
1.8	66	01/82 → 12/83	**FCP419**	KELGATE				
1.8 LX	66, 68	01/84 → 01/85	**FCP419**	KELGATE				
1.9	85	08/82 → 03/85	**FCP419**	KELGATE				
2.0	85	08/83 → 03/86	**FCP419**	KELGATE				
2.0	85	08/84 → 03/86	**FCP392**	KELGATE				
Scirocco								
1.1	37, 38	01/74 → 07/80	**FCP105**	ATE				
1.3	40, 44	01/81 → 01/84	**FCP419**	KELGATE				
1.3	40, 44	08/83 → 01/84	**FCP419**	KELGATE				
1.3	44	01/76 → 12/81	**FCP105**	ATE				
1.5	51	01/74 → 07/80	**FCP105**	ATE				
1.5	51	08/80 → 01/84	**FCP419**	KELGATE				
1.5	55	01/74 → 12/78	**FCP105**	ATE				
1.5	63	01/74 → 12/78	**FCP105**	ATE				
1.6	51, 55	01/84 → 08/88	**FCP392**	KELGATE				
1.6	55	08/80 → 12/83	**FCP419**	KELGATE				
1.6	63	08/80 → 12/83	**FCP419**	KELGATE				
1.6	81	08/80 → 12/83	**FCP419**	KELGATE				
1.6 GLi	81	01/74 → 07/80	**FCP105**	ATE				
1.6 GLi	81	08/80 → 12/83	**FCP419**	KELGATE				
1.6 GTi		08/79 → 12/83	**FCP392**	KELGATE				
1.6 GTi	81	01/76 → 07/79	**FCP105**	ATE				
1.8	66	01/84 → 08/89	**FCP392**	KELGATE				
1.8	66	01/84 → 08/89	**FCP775**	LUCAS/TRW				
1.8	70	01/84 → 08/89	**FCP392**	KELGATE				
1.8	70	01/84 → 08/89	**FCP775**	LUCAS/TRW				
1.8	82	01/84 → 08/89	**FCP392**	KELGATE				
1.8	82	01/84 → 08/89	**FCP775**	LUCAS/TRW				
1.8 GL, GTi	66, 82	08/83 → 12/83	**FCP392**	KELGATE				
1.8 GT2	66, 70	08/89 → 10/91	**FCP774**	LUCAS/TRW				
1.8 i 16V	102	01/84 → 08/89	**FCP774**	LUCAS/TRW				
1.8 i 16V	102	01/84 → 08/89				**FCP541**	LUCAS/TRW	
1.8 i Scala 16V	95, 102	09/89 → 10/91	**FCP392**	KELGATE				
1.8 i Scala 16V	95, 102	09/89 → 10/91	**FCP774**	LUCAS/TRW				
1.8 i Scala 16V	95, 102	09/89 → 10/91	**FCP775**	LUCAS/TRW				
1.8 i Scala 16V	95, 102	09/89 → 10/91				**FCP541**	LUCAS/TRW	
SCIROCCO (137, 138)								
1.4 TSI	118	05/08 →	**FCP1641**	ATE	PR 1LJ,1ZD,1ZE,1ZP (312&288mm disc)			
1.4 TSI	118	05/08 →	**FCP4223**	ATE	PR 1ZK (345mm disc)			
1.4 TSI	118	05/08 →				**FCP1491**	LUCAS/TRW	255 mm disc
1.4 TSI	118	05/08 →				**FCP1636**	LUCAS/TRW	PR 1KE,1KW,1KZ (310mm disc)
1.4 TSI	118	05/08 →				**FCP4316**	BOSCH	PR 1KS (272mm disc)
1.4 TSI	90	08/08 →	**FCP1641**	ATE	PR 1LJ,1ZD,1ZE,1ZP (312&288mm disc)			
1.4 TSI	90	08/08 →	**FCP4223**	ATE	PR 1ZK (345mm disc)			
1.4 TSI	90	08/08 →				**FCP1491**	LUCAS/TRW	255 mm disc
1.4 TSI	90	08/08 →				**FCP1636**	LUCAS/TRW	PR 1KE,1KW,1KZ (310mm disc)
1.4 TSI	90	08/08 →				**FCP4316**	BOSCH	PR 1KS (272mm disc)
1.4 TSI	150	07/15 →	**FCP4223**	ATE	PR 1ZK (345mm disc)			
1.4 TSI	92	11/13 →	**FCP1641**	ATE	312&288			
2.0 R	188	11/09 → 11/17	**FCP1641**	ATE	PR 1LJ,1ZD,1ZE,1ZP (312&288mm disc)			
2.0 R	188	11/09 → 11/17	**FCP4223**	ATE	For PR code:1ZK			
2.0 R	188	11/09 → 11/17				**FCP1636**	LUCAS/TRW	For PR code:1KW
2.0 R	188	11/09 → 11/17				**FCP4316**	BOSCH	PR 1KS (272mm disc)
2.0 R	195	11/09 → 11/17	**FCP1641**	ATE	PR 1LJ,1ZD,1ZE,1ZP (312&288mm disc)			
2.0 R	195	11/09 → 11/17	**FCP4223**	ATE	For PR code:1ZK			
2.0 R	195	11/09 → 11/17				**FCP1491**	LUCAS/TRW	PR 1KD (255mm disc)
2.0 R	195	11/09 → 11/17				**FCP1636**	LUCAS/TRW	For PR code:1KW
2.0 R	195	11/09 → 11/17				**FCP4316**	BOSCH	PR 1KS (272mm disc)
2.0 R	206	05/14 → 11/17	**FCP1641**	ATE	312&288 mm disc			
2.0 R	206	05/14 → 11/17	**FCP4223**	ATE	For PR code:1ZK			
2.0 R	206	05/14 → 11/17				**FCP1636**	LUCAS/TRW	For PR code:1KW
2.0 TDI	100	11/10 →	**FCP1641**	ATE	PR 1ZE (312&288mm disc)			
2.0 TDI	100	11/10 →				**FCP1491**	LUCAS/TRW	255 mm disc
2.0 TDI	100	11/10 →				**FCP1636**	LUCAS/TRW	310 mm disc
2.0 TDI	100	11/10 →				**FCP4316**	BOSCH	272 mm disc
2.0 TDI	103	08/08 →	**FCP1641**	ATE	PR 1LJ,1ZD,1ZE,1ZP (312&288mm disc)			
2.0 TDI	103	08/08 →	**FCP4223**	ATE	PR 1ZK (345mm disc)			
2.0 TDI	103	08/08 →				**FCP1491**	LUCAS/TRW	255 mm disc

For material availability see page 16-18 / Per la disponibilità materiali vedere a pagina 16-18

FERODO RACING
Updated on November 2020

...VOLKSWAGEN

...SCIROCCO (137, 138)

	kW					NOTE			NOTE
2.0 TDI	103	08/08 →					FCP1636	LUCAS/TRW	PR 1KE,1KW,1KZ (310mm disc)
2.0 TDI	103	08/08 →					FCP4316	BOSCH	PR 1KS (272mm disc)
2.0 TDI	110	11/13 → 11/17	FCP1641	ATE	Disc Diam mm:288,For PR code:1ZE				
2.0 TDI	110	11/13 → 11/17	FCP4223	ATE	Disc Diam mm:345,For PR code:1ZK				
2.0 TDI	110	11/13 → 11/17					FCP1491	LUCAS/TRW	
2.0 TDI	110	11/13 → 11/17					FCP1636	LUCAS/TRW	310 mm disc
2.0 TDI	125	05/09 →	FCP1641	ATE	PR 1LJ,1ZD,1ZE,1ZP(312&288mm disc)				
2.0 TDI	125	05/09 →	FCP4223	ATE	PR 1ZK (345mm disc)				
2.0 TDI	125	05/09 →					FCP1491	LUCAS/TRW	PR 1KD (255mm disc)
2.0 TDI	125	05/09 →					FCP1636	LUCAS/TRW	PR 1KE,1KW,1KZ (310mm disc)
2.0 TDI	125	05/09 →					FCP4316	BOSCH	PR 1KS (272mm disc)
2.0 TDI	130	01/13 →	FCP1641	ATE	312&288 mm disc				
2.0 TDI	130	01/13 →					FCP1491	LUCAS/TRW	255 mm disc
2.0 TDI	130	01/13 →					FCP1636	LUCAS/TRW	310 mm disc
2.0 TDI	130	01/13 →					FCP4316	BOSCH	272 mm disc
2.0 TDI	135	05/14 → 11/17	FCP1641	ATE	For PR code:1ZE				
2.0 TDI	135	05/14 → 11/17	FCP4223	ATE	For PR code:1ZK				
2.0 TDI	135	05/14 → 11/17					FCP1491	LUCAS/TRW	
2.0 TDI	135	05/14 → 11/17					FCP1636	LUCAS/TRW	PR 1KW (310mm disc)
2.0 TDI	135	05/14 → 11/17					FCP4316	BOSCH	PR 1KS,1KT (272mm disc)
2.0 TSI	132	11/13 → 11/17	FCP1641	ATE	Disc Diam mm:288,For PR code:1ZE				
2.0 TSI	132	11/13 → 11/17	FCP4223	ATE	Disc Diam mm:345,For PR code:1ZK				
2.0 TSI	132	11/13 → 11/17					FCP1491	LUCAS/TRW	
2.0 TSI	132	11/13 → 11/17					FCP1636	LUCAS/TRW	310 mm disc
2.0 TSI	147	05/08 → 11/09	FCP1641	ATE	Disc Diam mm:312,For PR code:1LJ/1ZA/1ZB				
2.0 TSI	147	05/08 → 11/09	FCP4223	ATE	PR 1ZK (345mm disc)				
2.0 TSI	147	05/08 → 11/09					FCP1491	LUCAS/TRW	255 mm disc
2.0 TSI	147	05/08 → 11/09					FCP1636	LUCAS/TRW	PR 1KE,1KW,1KZ (310mm disc)
2.0 TSI	147	05/08 → 11/09					FCP4316	BOSCH	PR 1KS (272mm disc)
2.0 TSI	155	11/09 → 05/11	FCP1641	ATE	PR 1LJ,1ZD,1ZE,1ZP (312&288mm disc)				
2.0 TSI	155	11/09 → 05/11	FCP4223	ATE	PR 1ZK (345mm disc)				
2.0 TSI	155	11/09 → 05/11					FCP1491	LUCAS/TRW	255 mm disc
2.0 TSI	155	11/09 → 05/11					FCP1636	LUCAS/TRW	PR 1KE,1KW,1KZ (310mm disc)
2.0 TSI	155	11/09 → 05/11					FCP4316	BOSCH	PR 1KS (272mm disc)
2.0 TSI	162	11/13 → 11/17	FCP1641	ATE	For PR code:1ZE				
2.0 TSI	162	11/13 → 11/17	FCP4223	ATE	For PR code:1ZK				
2.0 TSI	162	11/13 → 11/17					FCP1636	LUCAS/TRW	310 mm disc
2.0 TSI	162	11/13 → 11/17					FCP4316	BOSCH	For PR code:1KS/1KT

SCIROCCO (53)

1.6	51	08/75 → 07/77	FCP105	ATE					
1.6	55	08/75 → 07/79	FCP105	ATE					
1.6	63	08/75 → 07/80	FCP105	ATE					
1.6	81	06/76 → 07/80	FCP105	ATE					

SHARAN

1.8 20V	110	01/95 → 04/98	FCP590	ATE					
1.8 20V	110	01/95 → 04/98					FCP541	LUCAS/TRW	
1.9 TDi	66, 81	01/95 → 04/00	FCP590	ATE					
1.9 TDi	66, 81	01/95 → 04/00					FCP541	LUCAS/TRW	
2.0	85	01/95 → 04/00	FCP590	ATE					
2.0	85	01/95 → 04/00					FCP541	LUCAS/TRW	
2.0 16V	110	08/96 → 04/00	FCP590	ATE					
2.0 16V	110	08/96 → 04/00					FCP541	LUCAS/TRW	
2.8	128	01/95 → 04/00	FCP590	ATE					
2.8	128	01/95 → 04/00					FCP541	LUCAS/TRW	

SHARAN (7N1, 7N2)

1.4 TSI	110	05/10 →	FCP4425	LUCAS/TRW	PR 1LX,1LW(314mm disc)				
1.4 TSI	110	05/10 →					FCP1636	LUCAS/TRW	
2.0 TDI	100	05/10 →	FCP4425	LUCAS/TRW	PR 1LX,1LW(314mm disc)				
2.0 TDI	100	05/10 →					FCP1636	LUCAS/TRW	
2.0 TDI	103	05/10 →	FCP4425	LUCAS/TRW	PR 1LX,1LW(314mm disc)				
2.0 TDI	103	05/10 →					FCP1636	LUCAS/TRW	
2.0 TDI	125	08/10 →	FCP4425	LUCAS/TRW	PR 1LX,1LW(314mm disc)				
2.0 TDI	125	08/10 →					FCP1636	LUCAS/TRW	
2.0 TDI	85	05/11 →	FCP4425	LUCAS/TRW	PR 1LX,1LW(314mm disc)				
2.0 TDI	85	05/11 →					FCP1636	LUCAS/TRW	
2.0 TDI 4motion	100	05/11 → 05/12	FCP4425	LUCAS/TRW	PR 1LX,1LW(314mm disc)				
2.0 TDI 4motion	100	05/11 → 05/12					FCP1636	LUCAS/TRW	
2.0 TDI 4motion	103	05/11 →	FCP4425	LUCAS/TRW	PR 1LX,1LW(314mm disc)				
2.0 TDI 4motion	103	05/11 →					FCP1636	LUCAS/TRW	
2.0 TSI	147	12/10 →	FCP4425	LUCAS/TRW	PR 1LX,1LW(314mm disc)				
2.0 TSI	147	12/10 →					FCP1636	LUCAS/TRW	

For material availability see page 16-18 / Per la disponibilità materiali vedere a pagina 16-18

...VOLKSWAGEN

Touareg (7LA/7L6/7L7)

	kW				NOTE			NOTE
2.5 R5 TDI	120	08/03 → 05/10	FCP4064	BREMBO	PR 1LU/1LT			
2.5 R5 TDi	128	01/03 →	FCP1625	BREMBO	17"			
2.5 R5 TDi	128	01/03 → 05/10	FCP4064	BREMBO	PR 1LU/1LT			
2.5 R5 TDi	128	01/03 →				FCP1308	BREMBO	17" / 18"
3.0 TDI	155	04/06 → 05/10	FCP4064	BREMBO	PR 1LU/1LT			
3.0 V6 TDI	176	11/07 → 05/10	FCP4064	BREMBO	PR 1LU/1LT			
3.0 V6 TDi	165	11/04 →	FCP1334	BREMBO				
3.0 V6 TDi	165	11/04 →	FCP1625	BREMBO	17"			
3.0 V6 TDi	165	11/04 → 05/10	FCP4064	BREMBO	PR 1LU/1LT			
3.0 V6 TDi	165	11/04 →				FCP1308	BREMBO	17" / 18"
3.2 V6	177	10/02 → 11/06	FCP1625	BREMBO	17"			
3.2 V6	177	10/02 → 11/06				FCP1308	BREMBO	17" / 18"
3.2 V6	177	11/04 → 11/06	FCP1334	BREMBO	PR 1LE, Rim size 17 inch			
3.2 V6	177	11/04 → 11/06	FCP4064	BREMBO	PR 1LU/1LT			
3.2 V6	162	10/02 → 11/06	FCP1334	BREMBO	PR 1LE, Rim size 17 inch			
3.2 V6	162	10/02 → 11/06	FCP1625	BREMBO	17"			
3.2 V6	162	10/02 → 11/06	FCP4064	BREMBO	PR 1LU/1LT			
3.2 V6	162	10/02 → 11/06				FCP1308	BREMBO	17" / 18"
3.6 V6 FSI	206	10/05 → 05/10	FCP4064	BREMBO	PR 1LU/1LT			
3.6 V6 FSI	206	03/06 →	FCP1334	BREMBO				
3.6 V6 FSI	206	03/06 →				FCP1308	BREMBO	17" / 18"
4.2 V8	228	12/02 →	FCP1626	BREMBO				
4.2 V8	228	12/02 → 11/06	FCP4064	BREMBO	PR 1LU/1LT			
4.2 V8	228	12/02 →				FCP1308	BREMBO	17" / 18"
4.2 V8 FSI	257	06/06 → 05/10	FCP4064	BREMBO	PR 1LU/1LT			
5.0 R50 TDI	257	08/07 → 05/10	FCP4064	BREMBO	PR 1LU/1LT			
5.0 V10 TDI	230	10/02 →	FCP1626	BREMBO				
5.0 V10 TDI	230	10/02 → 05/10	FCP4064	BREMBO	PR 1LU/1LT			
5.0 V10 TDI	230	10/02 →				FCP1308	BREMBO	17" / 18"
6.0 V12	331	08/04 → 05/10	FCP4064	BREMBO	PR 1LU/1LT			
6.0 V12	331	03/05 →	FCP1626	BREMBO				
6.0 V12	331	03/05 →				FCP1308	BREMBO	17" / 18"

Touran

1.4 TSi 16v (1T1/1T2, 1T3)	103	02/06 →	FCP1641	ATE	PR 1ZP, 1ZE, 1ZA, 1ZD/1ZP			
1.4 TSi 16v (1T1/1T2, 1T3)	103	02/06 →				FCP4316	BOSCH	
1.4 TSi 16v (1T3)	125	05/10 →	FCP1641	ATE	PR 1ZE, 1ZA, 1ZD/1ZP			
1.4 TSi 16v (1T3)	125	05/10 →				FCP4316	BOSCH	
1.6 FSi	85	02/03 →	FCP1641	ATE				
1.6 FSi	85	02/03 →				FCP1636	LUCAS/TRW	
1.6 i	75	02/03 →	FCP1641	ATE				
1.6 i	75	02/03 →				FCP1636	LUCAS/TRW	
1.9 TDi	74	02/03 →	FCP1641	ATE				
1.9 TDi	74	02/03 →				FCP1636	LUCAS/TRW	
2.0 TDi	125	12/05 →	FCP1641	ATE				
2.0 TDi	125	12/05 →				FCP1636	LUCAS/TRW	
2.0 TDi 16v (1T1/1T2)	100	02/03 → 05/10	FCP1641	ATE	PR 1ZP, 1ZE			
2.0 TDi 16v (1T1/1T2)	100	02/03 → 05/10				FCP4316	BOSCH	
2.0 TDi 16v (1T1/1T2,1T3)	103	08/03 →	FCP1641	ATE	PR 1ZP, 1ZE, 1ZA, 1ZD/1ZP			
2.0 TDi 16v (1T1/1T2,1T3)	103	08/03 →				FCP4316	BOSCH	
2.0 TDi 16v (1T3)	125	05/10 →	FCP1641	ATE	PR 1ZE, 1ZA, 1ZD/1ZP			
2.0 TDi 16v (1T3)	125	05/10 →				FCP4316	BOSCH	
2.0 TDi 16v (1T3)	81	05/10 →	FCP1641	ATE	PR 1ZE, 1ZA, 1ZD/1ZP			
2.0 TDi 16v (1T3)	81	05/10 →				FCP4316	BOSCH	
2.0 TDi 8v (1T1/1T2)	103	12/05 → 05/10	FCP1641	ATE	PR 1ZP, 1ZE			
2.0 TDi 8v (1T1/1T2)	103	12/05 → 05/10				FCP4316	BOSCH	

TOURAN (5T1)

1.2 TSI	81	05/15 →	FCP4433	TRW	For PR code:1ZA			
1.2 TSI	81	05/15 →				FCP4434	ATE	For PR code:1KE
1.4 TSI	110	05/15 →	FCP4433	TRW	For PR code:1ZA			
1.4 TSI	110	05/15 →				FCP4434	ATE	For PR code:1KE
1.6 TDI	81	05/15 → 05/16	FCP4433	TRW	For PR code:1ZA			
1.6 TDI	81	05/15 → 05/16				FCP4434	ATE	For PR code:1KE
1.6 TDI	85	05/16 →	FCP4433	TRW	Disc Diam mm:312,For PR code:1ZA			
1.6 TDI	85	05/16 →				FCP4434	ATE	Disc Diam mm:272,For PR code:1KE
1.8 TSI	132	11/15 →	FCP4433	TRW	Disc Diam mm:312,For PR code:1ZA			
1.8 TSI	132	11/15 →				FCP4434	ATE	Disc Diam mm:272,For PR code:1KE
2.0 TDI	110	05/15 →	FCP4433	TRW	For PR code:1ZA			
2.0 TDI	110	05/15 →				FCP4434	ATE	For PR code:1KE
2.0 TDI	81	11/15 →	FCP4433	TRW				
2.0 TDI	81	11/15 →				FCP4434	ATE	

For material availability see page 16-18 / Per la disponibilità materiali vedere a pagina 16-18

FERODO RACING
Updated on November 2020

...VOLKSWAGEN

Vento

	kW				NOTE			NOTE
1.4	44	11/91 → 06/95	**FCP419**	KELGATE				
1.6	55	09/92 → 12/96	**FCP419**	KELGATE				
1.6	55	09/92 → 12/96	**FCP775**	LUCAS/TRW				
1.6	74	09/92 → 07/97	**FCP419**	KELGATE				
1.6	74	09/92 → 07/97	**FCP775**	LUCAS/TRW				
1.6 GT	74	10/94 → 07/95	**FCP774**	LUCAS/TRW				
1.6 GT	74	10/94 → 07/95				**FCP541**	LUCAS/TRW	
1.6 i	74	06/96 → 07/97	**FCP419**	KELGATE				
1.6 i	74	06/96 → 07/97	**FCP775**	LUCAS/TRW				
1.8	55	01/92 → 08/95	**FCP419**	KELGATE				
1.8	66	01/92 → 08/95	**FCP419**	KELGATE				
1.8 GT	66	01/92 → 07/95	**FCP774**	LUCAS/TRW				
1.8 GT	66	01/92 → 07/95				**FCP541**	LUCAS/TRW	
1.9 D	48	01/92 → 08/95	**FCP419**	KELGATE				
1.9 D	55	01/92 → 08/95	**FCP419**	KELGATE				
1.9 D	66	01/92 → 08/95	**FCP419**	KELGATE				
1.9 TD	55	01/92 → 12/94	**FCP775**	LUCAS/TRW				
1.9 TDi	66, 81	01/92 → 07/97	**FCP775**	LUCAS/TRW				
1.9 TDi	66, 81	01/92 → 07/97				**FCP541**	LUCAS/TRW	
1.9 TDi	66, 81	05/96 → 07/97	**FCP774**	LUCAS/TRW				
1.9 TDi	66, 81	05/96 → 07/97				**FCP541**	LUCAS/TRW	
2.0	85	01/92 → 07/95	**FCP774**	LUCAS/TRW				
2.0	85	01/92 → 07/95	**FCP775**	LUCAS/TRW				
2.0	85	01/92 → 07/95				**FCP541**	LUCAS/TRW	
2.0 GT	85	01/92 → 05/96	**FCP775**	LUCAS/TRW				
2.0 GT	85	01/92 → 05/96				**FCP541**	LUCAS/TRW	
2.0 GT	85	05/96 → 07/97	**FCP590**	ATE				
2.0 GT	85	05/96 → 07/97	**FCP775**	LUCAS/TRW				
2.0 GT	85	05/96 → 07/97				**FCP541**	LUCAS/TRW	
2.8 VR6	128	01/92 → 02/95	**FCP775**	LUCAS/TRW				
2.8 VR6	128	01/92 → 02/95				**FCP541**	LUCAS/TRW	
2.8 VR6	128	02/95 → 07/97	**FCP590**	ATE				
2.8 VR6	128	02/95 → 07/97	**FCP775**	LUCAS/TRW				
2.8 VR6	128	02/95 → 07/97				**FCP541**	LUCAS/TRW	

VOLVO

142

2.0	80	01/68 → 01/75				**FCP809**	LUCAS/TRW	

144

2.0	80	01/68 → 01/75				**FCP809**	LUCAS/TRW	

145

2.0	80	01/68 → 01/75				**FCP809**	LUCAS/TRW	

164

3.0	85	01/68 → 01/75				**FCP809**	LUCAS/TRW	

1800

1.8 i ES		01/72 → 12/73				**FCP809**	LUCAS/TRW	
1.8 S		01/69 → 12/70	**FCP9**	LUCAS/TRW				

221

2.0	66	01/69 → 12/70	**FCP9**	LUCAS/TRW				

240

		01/74 → 08/93				**FCP809**	LUCAS/TRW	
All i		01/74 → 08/93				**FCP809**	LUCAS/TRW	
All i		01/74 → 08/93				**FCP2**	ATE	

242

All i	60, 73	09/74 → 12/79				**FCP809**	LUCAS/TRW	
All i	60, 73	09/74 → 12/79				**FCP2**	ATE	

244

		09/74 → 06/85				**FCP809**	LUCAS/TRW	
All i		09/74 → 06/85				**FCP809**	LUCAS/TRW	
All i		09/74 → 06/85				**FCP2**	ATE	

For material availability see page 16-18 / Per la disponibilità materiali vedere a pagina 16-18

...VOLVO	kW				NOTE			NOTE
245								
		09/74 → 06/85				FCP809	LUCAS/TRW	
All i		09/74 → 06/85				FCP809	LUCAS/TRW	
All i		09/74 → 06/85				FCP2	ATE	
260 Estate (P265)								
2.7	103	07/75 → 07/82				FCP809	LUCAS/TRW	
2.7	109	10/78 → 07/82				FCP809	LUCAS/TRW	
2.7	92	08/75 → 07/77				FCP809	LUCAS/TRW	
262								
2.7	92, 109	09/74 → 08/82				FCP809	LUCAS/TRW	
2.8	114	09/74 → 08/82				FCP809	LUCAS/TRW	
264								
2.4	60	09/74 → 08/82				FCP809	LUCAS/TRW	
2.7	92, 106	09/74 → 08/82				FCP809	LUCAS/TRW	
2.8	91, 114	09/74 → 08/82				FCP809	LUCAS/TRW	
265								
2.8	91, 114	09/74 → 08/82				FCP809	LUCAS/TRW	
340								
1.4	47	09/82 → 10/91	FCP370	LUCAS/TRW				
1.4	50	09/82 → 10/91	FCP370	LUCAS/TRW				
1.4	52	09/82 → 10/91	FCP370	LUCAS/TRW				
1.6 D	40	09/82 → 10/91	FCP370	LUCAS/TRW				
1.7	60	09/82 → 10/91	FCP370	LUCAS/TRW				
340-360 (343, 345)								
1.4	46	08/82 → 08/85	FCP370	LUCAS/TRW				
1.4	47	08/79 → 07/83	FCP370	LUCAS/TRW				
1.4	50	08/86 → 12/88	FCP370	LUCAS/TRW				
1.4	51	08/75 → 07/83	FCP370	LUCAS/TRW				
1.4	51	08/87 → 07/88	FCP370	LUCAS/TRW				
1.4	52	08/83 → 07/86	FCP370	LUCAS/TRW				
2.0	80	08/88 → 07/89	FCP370	LUCAS/TRW				
2.0	82	08/86 → 07/88	FCP370	LUCAS/TRW				
2.0	85	08/82 → 07/84	FCP370	LUCAS/TRW				
340-360 Saloon (344)								
2.0	66	08/82 → 07/84	FCP370	LUCAS/TRW				
2.0	75	08/84 → 07/90	FCP370	LUCAS/TRW				
2.0	80	08/88 → 07/89	FCP370	LUCAS/TRW				
2.0	82	08/86 → 07/88	FCP370	LUCAS/TRW				
2.0	85	08/84 → 07/86	FCP370	LUCAS/TRW				
343								
1.4	47	02/76 → 08/92	FCP370	LUCAS/TRW				
1.4	47	02/76 → 08/92	FCP810	LUCAS/TRW				
2.0	71	02/76 → 08/92	FCP370	LUCAS/TRW				
2.0	71	02/76 → 08/92	FCP810	LUCAS/TRW				
345								
2.0	71	06/79 → 12/92	FCP370	LUCAS/TRW				
360								
1.4		01/76 → 08/79	FCP810	LUCAS/TRW				
1.4		09/79 → 12/91	FCP370	LUCAS/TRW				
66								
1.3	42	01/75 → 09/80	FCP3	ATE				
740								
All i		01/83 → 10/91				FCP2	ATE	
760								
All i		01/82 → 07/91				FCP2	ATE	
All i		08/91 → 12/92				FCP2	ATE	

For material availability see page 16-18 / Per la disponibilità materiali vedere a pagina 16-18

FERODO RACING
Updated on November 2020



kW

...VOLVO					NOTE			NOTE
780								
2.0 i		01/88 → 12/90				FCP2	ATE	
2.4 i		01/88 → 12/90				FCP2	ATE	
2.8 Bertone	108, 125	08/86 → 07/90				FCP2	ATE	
850 (LS)								
2.0	105	06/91 → 12/96	FCP1285	ATE				
2.0	105	06/91 → 12/96				FCP2	ATE	
2.4	103	06/91 → 07/94	FCP1285	ATE				
2.4	103	06/91 → 07/94				FCP2	ATE	
2.4	125	08/91 → 12/96	FCP1285	ATE				
2.4	125	08/91 → 12/96				FCP2	ATE	
2.5 TDI	103	08/95 → 12/96	FCP1285	ATE				
2.5 TDI	103	08/95 → 12/96				FCP2	ATE	
850 Estate (LW)								
2.0	105	02/93 → 12/96	FCP1285	ATE				
2.0	105	02/93 → 12/96				FCP2	ATE	
2.4	103	08/92 → 07/94	FCP1285	ATE				
2.4	103	08/92 → 07/94				FCP2	ATE	
2.4	125	09/92 → 12/96	FCP1285	ATE				
2.4	125	09/92 → 12/96				FCP2	ATE	
2.5 TDI	103	08/95 → 12/96	FCP1285	ATE				
2.5 TDI	103	08/95 → 12/96				FCP2	ATE	
940								
All i		08/90 → 09/93				FCP2	ATE	
960								
All i Saloon		08/90 → 08/93				FCP2	ATE	
All i Saloon		09/93 → 11/94				FCP2	ATE	
All i Saloon		11/94 → 10/96				FCP2	ATE	
All i SW Estate		08/90 → 08/93				FCP2	ATE	
All i SW Estate		09/93 → 10/96				FCP2	ATE	
C30								
1.6	74	10/06 → 12/12				FCP1931	ATE	
1.6 D	80	10/06 → 12/12				FCP1931	ATE	
1.6 D2	84	10/10 → 12/12				FCP1931	ATE	
1.8	92	10/06 → 12/12				FCP1931	ATE	
1.8 FlexFuel	92	01/07 → 12/12				FCP1931	ATE	
2.0	107	10/06 → 12/12				FCP1931	ATE	
2.0 D	100	10/06 → 12/12				FCP1931	ATE	
2.0 FlexFuel	107	01/10 → 12/12				FCP1931	ATE	
2.4 i	125	10/06 → 12/12				FCP1931	ATE	
D3	110	10/10 → 12/12				FCP1931	ATE	
D4	130	10/10 → 12/12				FCP1931	ATE	
D5	120	10/06 → 12/12				FCP1931	ATE	
D5	132	10/06 → 12/12				FCP1931	ATE	
T5	162	10/06 → 12/12	FCP1706	ATE	For Rims 17 inch			
T5	162	10/06 → 12/12				FCP1931	ATE	
T5	169	03/07 → 12/12	FCP1706	ATE	For Rims 17 inch			
T5	169	03/07 → 12/12				FCP1931	ATE	
C70								
2.0 T5 20V		06/97 →	FCP1285	ATE				
2.0 T5 20V		06/97 →				FCP2	ATE	
2.3 i T5 20V	177	06/97 →	FCP1285	ATE				
2.3 i T5 20V	177	06/97 →				FCP2	ATE	
2.5 T 20V	142	06/97 →	FCP1285	ATE				
2.5 T 20V	142	06/97 →				FCP2	ATE	
C70 II Convertible								
2.0 D	100	01/08 →				FCP1931	ATE	
2.4	103	03/06 →				FCP1931	ATE	
2.4 i	125	03/06 →				FCP1931	ATE	
D3	110	10/10 →	FCP1706	ATE	For Rims 17 inch			
D3	110	10/10 →				FCP1931	ATE	
D4	130	10/10 →	FCP1706	ATE	For Rims 17 inch			
D4	130	10/10 →				FCP1931	ATE	
D5	132	03/06 →				FCP1931	ATE	
T5	162	03/06 →				FCP1931	ATE	
T5	169	03/07 →				FCP1931	ATE	

For material availability see page 16-18 / Per la disponibilità materiali vedere a pagina 16-18

...VOLVO	kW				NOTE			NOTE
S40								
1.6 16V	77	03/96 → 12/98	**FCP1093**	LUCAS/TRW				
1.8 16V	85	03/96 → 12/98	**FCP1093**	LUCAS/TRW				
1.9 T4 16V	147	06/97 → 12/98	**FCP1093**	LUCAS/TRW				
1.9 TD	66	03/96 → 12/98	**FCP1093**	LUCAS/TRW				
2.0 16V	100	03/96 → 12/98	**FCP1093**	LUCAS/TRW				
S40 II (MS)								
1.6	74	01/05 →	**FCP1706**	ATE	For Rims 17 inch			
1.6	74	01/05 →				**FCP1931**	ATE	
1.6 D	81	01/05 →	**FCP1706**	ATE	For Rims 17 inch			
1.6 D	81	01/05 →				**FCP1931**	ATE	
1.6 D2	84	10/10 →	**FCP1706**	ATE	For Rims 17 inch			
1.6 D2	84	10/10 →				**FCP1931**	ATE	
1.8	92	04/04 →	**FCP1706**	ATE	For Rims 17 inch			
1.8	92	04/04 →				**FCP1931**	ATE	
1.8 FlexFuel	92	01/06 →	**FCP1706**	ATE	For Rims 17 inch			
1.8 FlexFuel	92	01/06 →				**FCP1931**	ATE	
2.0	107	10/06 →	**FCP1706**	ATE	For Rims 17 inch			
2.0	107	10/06 →				**FCP1931**	ATE	
2.0 D	100	01/04 →	**FCP1706**	ATE	For Rims 17 inch			
2.0 D	100	01/04 →				**FCP1931**	ATE	
2.0 D4	96	07/05 →	**FCP1706**	ATE	For Rims 17 inch			
2.0 D4	96	07/05 →				**FCP1931**	ATE	
2.0 F	107	10/06 →	**FCP1706**	ATE	For Rims 17 inch			
2.0 F	107	10/06 →				**FCP1931**	ATE	
2.4	103	01/04 →	**FCP1706**	ATE	For Rims 17 inch			
2.4	103	01/04 →				**FCP1931**	ATE	
2.4	125	01/04 →	**FCP1706**	ATE	For Rims 17 inch			
2.4	125	01/04 →				**FCP1931**	ATE	
2.4 AWD	125	08/06 →	**FCP1706**	ATE	For Rims 17 inch			
2.4 AWD	125	08/06 →				**FCP1931**	ATE	
2.4 D5	132	03/06 →	**FCP1706**	ATE	For Rims 17 inch			
2.4 D5	132	03/06 →				**FCP1931**	ATE	
D3	110	10/10 →	**FCP1706**	ATE	For Rims 17 inch			
D3	110	10/10 →				**FCP1931**	ATE	
D4	130	10/10 →	**FCP1706**	ATE	For Rims 17 inch			
D4	130	10/10 →				**FCP1931**	ATE	
T5	162	01/04 →	**FCP1706**	ATE	For Rims 17 inch			
T5	162	01/04 →				**FCP1931**	ATE	
T5	169	03/07 →	**FCP1706**	ATE	For Rims 17 inch			
T5	169	03/07 →				**FCP1931**	ATE	
T5 AWD	162	04/04 →	**FCP1706**	ATE	For Rims 17 inch			
T5 AWD	162	04/04 →				**FCP1931**	ATE	
T5 AWD	169	03/07 →	**FCP1706**	ATE	For Rims 17 inch			
T5 AWD	169	03/07 →				**FCP1931**	ATE	
S60								
2.0 i (Turbo) 20V	132	07/00 →	**FCP1382**	ATE				
2.3 i (T5) 20V	195	07/00 →	**FCP1382**	ATE				
2.4 i,(Turbo) 20V	147	07/00 →	**FCP1382**	ATE				
2.4 TDi 20V	96	03/01 →	**FCP1382**	ATE				
2.5 i (Turbo) 20V	154	03/03 →	**FCP1382**	ATE				
S60 R 2.5 T AWD	221	03/03 →	**FCP1334**	BREMBO				
S60 R 2.5 T AWD	221	03/03 →				**FCP1348**	BREMBO	
S70								
2.3 20V	177	01/97 → 11/00	**FCP1285**	ATE				
2.3 20V	177	01/97 → 11/00				**FCP2**	ATE	
2.5 20V	106, 125	01/97 → 11/00	**FCP1285**	ATE				
2.5 20V	106, 125	01/97 → 11/00				**FCP2**	ATE	
S70 (LS)								
2.0	105	01/97 → 11/00	**FCP1285**	ATE				
2.0	105	01/97 → 11/00				**FCP2**	ATE	
2.0	132	01/97 → 11/00	**FCP1285**	ATE				
2.0	132	01/97 → 11/00				**FCP2**	ATE	
2.0	93	01/97 → 11/00	**FCP1285**	ATE				
2.0	93	01/97 → 11/00				**FCP2**	ATE	
S80								
2.0 i,(Turbo) 20V		07/98 →	**FCP1382**	ATE				
2.4 20V		07/98 →	**FCP1285**	ATE				
2.4 D	96	08/01 →	**FCP1382**	ATE				
2.4 TDi D5	120	08/01 →	**FCP1382**	ATE				
2.5 TDi		07/98 →	**FCP1382**	ATE				
2.8 i T6 24V		07/98 →	**FCP1382**	ATE				

For material availability see page 16-18 / Per la disponibilità materiali vedere a pagina 16-18

FERODO RACING
Updated on November 2020

...VOLVO	kW				NOTE				NOTE
...S80									
2.9 i 24V		07/98 →	FCP1382	ATE					
S80 II									
2.0	107	01/08 →					FCP1917	LUCAS/TRW	Without EPB
2.0D	100	01/08 →					FCP1917	LUCAS/TRW	Without EPB
2.4 D	120	03/06 →					FCP1917	LUCAS/TRW	Without EPB
2.4 D5	136	03/06 →					FCP1917	LUCAS/TRW	Without EPB
2.5 T	147	03/06 →					FCP1917	LUCAS/TRW	Without EPB
3.0 T6	210	01/07 →					FCP1917	LUCAS/TRW	Without EPB
3.2	175	03/06 →					FCP1917	LUCAS/TRW	Without EPB
4.4 V8	232	03/06 →					FCP1917	LUCAS/TRW	Without EPB
V40									
1.6 16V	77	03/96 → 12/98	FCP1093	LUCAS/TRW					
1.8 16V	85	03/96 → 12/98	FCP1093	LUCAS/TRW					
1.9 16V	147	06/97 → 12/98	FCP1093	LUCAS/TRW					
1.9 TD	66	03/96 → 12/98	FCP1093	LUCAS/TRW					
2.0 16V	100	03/96 → 12/98	FCP1093	LUCAS/TRW					
V50 (MW)									
1.6	74	01/05 →	FCP1706	ATE	For Rims 17 inch				
1.6	74	01/05 →					FCP1931	ATE	
1.6 D	81	01/05 →	FCP1706	ATE	For Rims 17 inch				
1.6 D	81	01/05 →					FCP1931	ATE	
1.6 D2	84	01/10 →	FCP1706	ATE	For Rims 17 inch				
1.6 D2	84	01/10 →					FCP1931	ATE	
1.8	92	04/04 →	FCP1706	ATE	For Rims 17 inch				
1.8	92	04/04 →					FCP1931	ATE	
1.8 FlexFuel	92	01/05 →	FCP1706	ATE	For Rims 17 inch				
1.8 FlexFuel	92	01/05 →					FCP1931	ATE	
2.0	107	10/06 →	FCP1706	ATE	For Rims 17 inch				
2.0	107	10/06 →					FCP1931	ATE	
2.0 D	100	04/04 →	FCP1706	ATE	For Rims 17 inch				
2.0 D	100	04/04 →					FCP1931	ATE	
2.0 FlexFuel	107	01/10 →	FCP1706	ATE	For Rims 17 inch				
2.0 FlexFuel	107	01/10 →					FCP1931	ATE	
2.4	103	04/04 →	FCP1706	ATE	For Rims 17 inch				
2.4	103	04/04 →					FCP1931	ATE	
2.4	125	04/04 →	FCP1706	ATE	For Rims 17 inch				
2.4	125	04/04 →					FCP1931	ATE	
2.4 AWD	125	08/06 →	FCP1706	ATE	For Rims 17 inch				
2.4 AWD	125	08/06 →					FCP1931	ATE	
2.4 D5	132	03/06 →	FCP1706	ATE	For Rims 17 inch				
2.4 D5	132	03/06 →					FCP1931	ATE	
2.4 Tdi	120	05/07 →	FCP1706	ATE	For Rims 17 inch				
2.4 Tdi	120	05/07 →					FCP1931	ATE	
D3	110	10/10 →	FCP1706	ATE	For Rims 17 inch				
D3	110	10/10 →					FCP1931	ATE	
D4	130	10/10 →	FCP1706	ATE	For Rims 17 inch				
D4	130	10/10 →					FCP1931	ATE	
T5	162	04/04 →	FCP1706	ATE	For Rims 17 inch				
T5	162	04/04 →					FCP1931	ATE	
T5	169	03/07 →	FCP1706	ATE	For Rims 17 inch				
T5	169	03/07 →					FCP1931	ATE	
T5 AWD	162	04/04 →	FCP1706	ATE	For Rims 17 inch				
T5 AWD	162	04/04 →					FCP1931	ATE	
T5 AWD	169	03/07 →	FCP1706	ATE					
T5 AWD	169	03/07 →					FCP1931	ATE	
V70									
2.0 i (Turbo) 20V	132	07/01 →	FCP1382	ATE					
2.3 20V	177	01/97 → 02/00	FCP1285	ATE					
2.3 20V	177	01/97 → 02/00					FCP2	ATE	
2.3 i T5	184	03/00 →	FCP1382	ATE					
2.4 i,(Turbo)	147	03/00 →	FCP1382	ATE					
2.4 TD D5	120	03/00 →	FCP1382	ATE					
2.5 TDi	103	03/00 →	FCP1382	ATE					
V70 I (LV)									
2.0	132	11/96 → 03/00	FCP1285	ATE					
2.0	132	11/96 → 03/00					FCP2	ATE	
2.0	93	12/95 → 03/00	FCP1285	ATE					
2.0	93	12/95 → 03/00					FCP2	ATE	
2.0 Turbo	166	11/96 → 12/00	FCP1285	ATE					
2.0 Turbo	166	11/96 → 12/00					FCP2	ATE	
2.4	103	03/99 → 12/00	FCP1285	ATE					

For material availability see page 16-18 / Per la disponibilità materiali vedere a pagina 16-18

	kW				NOTE			NOTE
...VOLVO								
...V70 I (LV)								
2.4	103	03/99 → 12/00				FCP2	ATE	
2.4	106	12/95 → 03/00	FCP1285	ATE				
2.4	106	12/95 → 03/00				FCP2	ATE	
2.4 Bifuel	103	08/99 → 12/00	FCP1285	ATE				
2.4 Bifuel	103	08/99 → 12/00				FCP2	ATE	
2.4 Bifuel	106	05/98 → 12/99	FCP1285	ATE				
2.4 Bifuel	106	05/98 → 12/99				FCP2	ATE	
2.4 Turbo	142	04/96 → 12/00	FCP1285	ATE				
2.4 Turbo	142	04/96 → 12/00				FCP2	ATE	
2.4 Turbo AWD	142	04/96 → 12/00	FCP1285	ATE				
2.4 Turbo AWD	142	04/96 → 12/00				FCP2	ATE	
V70 II								
R 2.5 T AWD	221	03/03 →	FCP1334	BREMBO				
R 2.5 T AWD	221	03/03 →				FCP1348	BREMBO	
V70 III								
2.0	107	10/07 →				FCP1917	LUCAS/TRW	Without EPB
2.0D	100	10/07 →				FCP1917	LUCAS/TRW	Without EPB
2.4 D	120	03/06 →				FCP1917	LUCAS/TRW	Without EPB
2.4 D5	136	08/07 →				FCP1917	LUCAS/TRW	Without EPB
2.5 T	147	08/07 →				FCP1917	LUCAS/TRW	Without EPB
3.0 T6	210	08/07 →				FCP1917	LUCAS/TRW	Without EPB
3.2	175	08/07 →				FCP1917	LUCAS/TRW	Without EPB
XC70 II								
2.4 D	120	08/07 →				FCP1917	LUCAS/TRW	Without EPB
2.4 D5	136	08/07 →				FCP1917	LUCAS/TRW	Without EPB
3.2	175	08/07 →				FCP1917	LUCAS/TRW	Without EPB
XC90								
2.5 T (not for 16")	154	10/02 →	FCP1631	ATE				
3.0 T6 (not for 16")	200	10/02 →	FCP1631	ATE				
3.2 AWD	175	05/06 →	FCP1631	ATE	not for 16 inch			
3.2 AWD	179	04/10 →	FCP1631	ATE	not for 16 inch			
4.4 V8 (not for 16")	232	01/05 →	FCP1631	ATE				
D3 / D5	120	04/09 →	FCP1631	ATE	17 inch			
D5	136	05/06 →	FCP1631	ATE	17 inch			
D5	147	01/11 →	FCP1631	ATE	17 inch			
WARTBURG								
311								
1.1 (A.W.E.)		01/83 →	FCP461	ATE				
353								
1.0	37	02/75 → 01/89	FCP461	ATE				
1.3 (A.W.E.)	43	01/83 →	FCP461	ATE				
YUGO								
311								
1.1 (Zastava)	41	01/83 → 08/87	FCP29	BENDIX				
313								
1.3 (Zastava)	47	01/83 → 07/88	FCP29	BENDIX				
411								
1.1 (Zastava)	41	01/84 → 12/86	FCP29	BENDIX				
413								
1.3 (Zastava)	47	01/84 → 12/86	FCP29	BENDIX				
45								
0.9 (Zastava)	48	04/80 → 04/91	FCP29	BENDIX				

For material availability see page 16-18 / Per la disponibilità materiali vedere a pagina 16-18

FERODO RACING
Updated on November 2020







...YUGO	kW				NOTE			NOTE
511								
1.1 (Zastava)	41	01/83 → 08/90	**FCP29**	BENDIX				
513								
1.3 (Zastava)	47	01/83 → 06/90	**FCP29**	BENDIX				
65								
1.3 (Zastava)	50	04/80 → 04/91	**FCP29**	BENDIX				
Florida								
1.4 (Zastava)	52	01/90 →	**FCP524**	LUCAS/TRW				
Miami								
1.4 (Zastava)	52	11/89 →	**FCP524**	LUCAS/TRW				
Sana								
1.4 (Zastava)	52	11/89 → 10/93	**FCP524**	LUCAS/TRW				
Tempo								
0.9 (Zastava)	33	05/91 → 12/93	**FCP29**	BENDIX				
1.1 (Zastava)	41	05/91 → 12/93	**FCP29**	BENDIX				
1.3 (Zastava)	48	02/91 → 05/98	**FCP29**	BENDIX				
1.3 Zastava		10/83 → 12/89	**FCP29**	BENDIX				

For material availability see page 16-18 / Per la disponibilità materiali vedere a pagina 16-18

FERODO®

PADS FOR RACING CALIPERS



FERODO®
RACING

PADS FOR RACING CALIPERS
PASTIGLIE PER PINZE DA COMPETIZIONE





...ALCON

Advantage Extreme 4 piston	FRP3135
Advantage Extreme 6 piston	FRP3134
B type - Th. 16.0mm	FRP1077
B type - Th. 18.0mm	FRP3007
B type - Th. 20.0mm	FRP302
B type - Th. 25.0mm	FRP1078
CAR9549 D64	FRP3153
F type - Th. 28mm	FRP3059
H type - Th. 16.0mm	FRP219
H type - Th. 16.0mm	FRP218
K type - Th. 16mm	FRP3009
K type - Th. 20mm	FRP3012
PNF0083X264	FRP201
PNF0084X222 (Truck pad)	FRP3027
PNF0084X225	FRP3001
PNF0084X245	FRP216
PNF0084X265	FRP1077
PNF0084X272	FRP1058
PNF0084X276	FRP3018
PNF0084X282	FRP1064
PNF0084X283	FRP3004
PNF0084X284	FRP502
PNF0084X288	FRP216
PNF0084X304	FRP3028
PNF0084X305	FRP3025
PNF0084X306	FRP3025
PNF0084X322	FRP1079
PNF0084X331	FRP216
PNF3430X275	FRP3043
PNF4441X634	FRP302
PNF4441X714	FRP1077
PNF4441X723	FRP1077
PNF4441X728	FRP302
PNF4441X737	FRP302
PNF4441X754	FRP302
PNF4463X529	FRP219
PNF4463X551	FRP218
PNF4463X553	FRP218
PNF4463X554	FRP201
PNF4463X555	FRP201
PNF4463X568	FRP201
PNF4463X572	FRP219
PNF4476X541 / 545	FRP3009
PNF4476X549	FRP3012
PNF4489X519	FRP3000
PNF4489X532	FRP3003
PNF4489X534	FRP3000
PNF4489X543	FRP3015
PNF4489X544	FRP3015
PNF4489X562	FRP3000





PNF4493X501	FRP3026
PNF4493X503	FRP3026
PNF4493X603	FRP3044
PNF4495X501	FRP3039
PNF4495X504	FRP3037
PNF4495X505	FRP3039
PNF4496X515 (Subaru WRC 03 Front) - Th. 18mm	FRP3074
PNF4497x607 - Monoblock 6 - Th. 16mm	FRP3081
PNF4498x603 - Monoblock 4 - Th. 15mm	FRP3082
R type - Th. 14.4mm	FCP810
R type - Th. 14.4mm	FCP809
Subaru Impreza Alcon/Prodrive kit - Th. 16.0mm	FRP1077
TA 6 - Th. 20mm	FRP3014
TA 6+ type - Th. 20mm	FRP3039
Type 6 x 2 - Th. 16.0mm	FRP3006
XF type (scalloped) - Th. 28mm	FRP3060
XR 6 type - Th. 28mm	FRP3015

AP RACING

"CP5111 Family"	FCP1562
A1GP cars 2006-2007	FRP3073
AP Caliper families taking CP2712D44 pad	FCP840
CP 2485 - Th. 14.4mm	FCP825
CP 2576 - Th. 14.4mm	FCP825
CP 2577 - Th. 14.4mm	FCP825
CP 3176 - Th. 14.4mm	FCP825
CP 3177 - Th. 14.4mm	FCP825
CP 3178 - Th. 14.4mm	FCP825
CP 3676 - Th. 14.4mm	FCP825
CP 3677 - Th. 14.4mm	FCP825
CP 4586 - Th. 14.4mm	FCP825
CP 4596 - Th. 14.4mm	FCP825
CP 5211 - Th. 14.4mm	FCP825
CP 5310 - Th. 14.4mm	FCP825
CP 5311 - Th. 14.4mm	FCP825
CP2195	FCP342
CP2270 - Th. 15.0mm	FRP203
CP2271 - Th. 15.0mm	FRP203
CP2279 - Th. 16.7mm	FRP3018
CP2279 - Th. 20.3mm	FRP212
CP2279 - Th. 20.3mm	FRP3073
CP2340	FRP3021
CP2361	FRP201
CP2361	FRP218
CP2373	FRP202
CP2382	FRP202
CP2383	FRP202
CP2384	FRP202
CP2425	FRP203
CP2575	FRP203
CP2696	FCP342
CP2749 - Th. 28mm	FRP3059

FERODO RACING

Updated on November 2020

PADS FOR RACING CALIPERS
PASTIGLIE PER PINZE DA COMPETIZIONE





...AP RACING

CP2749 Th. 28mm	FRP3060
CP2831	FRP203
CP2876	FRP203
CP2986	FRP203
CP3008	FRP203
CP3009	FRP203
CP3215	FRP3018
CP3215 - Th. 16.8mm (previously FRP3072)	FRP3091
CP3307 - Th. 17.0mm	FRP216
CP3344 - Th. 16.0mm	FRP219
CP3345 - Th. 16.0mm	FRP219
CP3395 - Th. 20.3mm	FRP212
CP3558	FRP3061
CP3558	FRP3014
CP3558	FRP1060
CP3620	FRP216
CP3714	FRP217
CP3720 - Th. 17.0mm	FRP216
CP3788 - Th. 20.3mm	FRP212
CP3789 - Th. 20.3mm	FRP212
CP3796	FRP3006
CP3796 - Th. 18.0mm	FRP3000
CP3799 - Th. 20.3mm	FRP212
CP3894 - Th. 18.0mm	FRP3000
CP3894 - Th. 18mm	FRP3054
CP3996 - Th. 18.0mm	FRP3000
CP4090 - Th. 18.0mm	FRP3000
CP4096 - Th. 18.0mm	FRP3000
CP4098 - Th. 18.0mm	FRP3000
CP4140	FRP3001
CP4152 - Th. 16.0mm	FRP219
CP4218 - Th. 25mm	FRP3014
CP4230 - Th. 28.5mm	FRP3015
CP4270	FRP203
CP4296	FRP1061
CP4567 - Th. 16.0mm	FRP219
CP4595	FRP3015
CP4751	FRP501
CP4848	FRP3086
CP4890 - Th. 16.0mm	FRP216
CP5020	FCP825
CP5040-20-23	FRP216
CP5060-2 to -5 / CP5555	FRP3003
CP5070 - Th. 17mm	FRP3076
CP5070 - Th. 17mm	FRP3077
CP5100 - Th. 16.0mm	FRP219
CP5104 - Th. 16.0mm	FRP219
CP5119	FRP3056
CP5148	FRP3020
CP5148 - Th. 18mm	FRP3086





CP5555 - Th. 18mm	FRP3054
CP5570 Kits - Th. 17mm	FRP3076
CP5575-1004 (Big Brake Kit)	FRP3077
CP5788	FRP3024
CP5805	FRP503
CP5820 - Th. 30mm	FRP3040
CP5846 / CP5847 / CP6070 / CP6071 / CP6270 / CP6271	FRP1078
CP6060	FRP3055
CP6065	FRP3055
CP6086	FRP3055
CP6160	FRP3055
CP6161	FRP3055
CP6210 - Th. 28mm	FRP3037
CP6210 -Th. 30mm	FRP3055
CP6230 - Th. 25mm	FRP3039
CP6268 (e.g. V8 Supercar)	FRP3131
CP6276	FRP3150
CP6360	FRP3055
CP6361	FRP3055
CP6600	FRP3107
CP6600 - Th. 16.9mm	FRP3083
CP6627	FRP3115
CP6720	FRP216
CP6730	FRP216
CP6740	FRP216
CP7031 - Th. 16mm (F3 system)	FRP3102
CP7040	FRP3114
CP7040 - Th. 16.9mm	FRP3084
CP7269 Family	FRP3155
CP7600 - Th. 16.1mm	FRP3085
CP7611-1000	FRP3085
CP7635 D40	FCP4972
CP8310	FRP3027
CP8350	FRP3116
CP8350 - Th. 20mm	FRP3097
CP8351	FRP3116
CP8520	FRP3147
CP8521	FRP3147
CP8522	FRP3147
CP9660	FRP3144
F3	FRP3021
SC 200 - Th. 20.0mm	FRP501
SC 240 - Th. 20.0mm	FRP308
SC 300 - Th. 20.0mm	FRP501
SC 350 - Th. 20.0mm	FRP501
SC 360 - Th. 20.3mm	FRP503
SC 500 - Th. 28mm	FRP3059
SC 560 - Th. 20.3mm	FRP503
SC 660 - Th. 25mm	FRP3014
SC 660 - Th. 28.5mm	FRP3015
SC 670 - Th. 25mm	FRP3014
SC 670 - Th. 28.5mm	FRP3015

PADS FOR RACING CALIPERS
PASTIGLIE PER PINZE DA COMPETIZIONE





...AP RACING

SC 680 - Th. 30mm	FRP3040
Subaru 06 MY VO Gr N - Rear - Th. 16.0mm	FRP219

AP RACING/BREMBO

AP Racing/Brembo handbrake	FRP3126

BREMBO

07.5064.7	FRP308
07.5064.8	FRP1079
07.5139.	FRP3032
07.5139.0	FRP1077
07.5139.3	FRP1078
07.5139.6	FRP302
07.5169.9	FRP3024
07.5308.9	FRP3042
07.5684.2	FRP1058
07.5684.2	FRP1064
07.5684.5	FRP3023
07.5684.5	FRP3022
07.5684.8	FRP3033
07.5868.	FRP1059
07.5868.2	FRP3004
07.6955.3	FRP3053
07.7293.6	FRP3031
07.7614.2	FRP3040
07.7614.3	FRP3046
07.7810.1	FRP3035
07.7810.2	FRP3034
07.7810.3	FRP3045
07.7859.1	FRP3029
07.7859.2	FRP3030
07.7869.12	FRP3070
07.A262.20 - Th. 16mm (New Brembo F3 System 2007->)	FRP3103
107.8590.15 Nissan GTR (R35)	FRP3106
20.3655.01 - Th. 14.4mm	FCP825
20.4548.03 - Th. 25.0mm	FRP1078
20.4862.05 - Th. 18.4mm	FCP1281
20.5187.30 - Th. 17.3mm	FCP721
6 piston D48	FRP3099
6 piston D58	FRP3098
6 Pistons	FRP3100
6 Pistons - narrow annulus - Th. 27.8mm	FRP3080
B08 family - Th. 16mm	FRP3071
B09 family - Th. 16mm	FRP1079
B09 family - Th. 20mm	FRP308
B10 family - Th. 16mm - 4 piston	FRP3103
B11 family - Th. 14mm	FRP3109
B13 family - Th. 16mm	FRP1077
B13 family - Th. 25mm - 4 piston	FRP1078
B15 family - Th. 17mm	FRP3028





B18 family - Th. 16mm	FRP3140
B18 family - Th. 17mm	FRP3087
B18 family - Th. 20mm	FRP3024
B18 family - Th. 26mm - 4 piston	FRP3029
B19 family - Th. 26mm	FRP3053
B21 family - Th. 30mm	FRP3046
B22 family - Th. 30mm	FRP3080
B24 family - Th. 22mm - 6 piston	FRP3123
B24 family - Th. 25mm - 6 piston	FRP3110
B24 family - Th. 29mm	FRP3031
B26 family - Th. 17mm	FRP3087
B26 family - Th. 20mm	FRP3024
B28 family - Th. 29mm 6 piston D64 wide	FRP3153
B51 family - Th. 18mm - 6 piston	FRP3003
B51 family - Th. 25mm - 6 piston	FRP3014
B51 family - Th. 28mm - 6 piston	FRP3015
B52 family - Th. 17mm - 4 piston	FRP216
B52 family - Th. 20mm - 4 piston	FRP212
B54 family - Th. 17mm	FRP3018
B55 family - Th. 25mm - 6 piston	FRP3039
B55 family - Th. 28mm - 6 piston	FRP3037
B55 family - Th. 30mm - 6 piston	FRP3055
B60 family - Th. 30mm - 6 piston	FRP3155
B62 family - Th. 15mm	FRP3067
B63 family - Th. 15mm	FCP1667
B64 family - Th. 17mm	FRP3098
B65 family - Th. 17mm	FRP3099
B66 family - Th. 19mm	FRP3096
B67 family - Th. 19mm	FRP3095
B70 family - Th. 30mm	FRP3151
Brembo F3 System (prior 2007) - Th. 16mm	FRP3071
Brembo System - S2000 Asphalt - Th. 17.5mm	FRP3088
Brembo System - S2000 Gravel - Th. 17.5mm	FRP3087
Ford WRC - Th. 16mm	FRP3022
GT front - Th. 29mm	FRP3031
GT3 caliper 2009	FRP3110
M8 (8 pistons caliper)	FCP4611
Mitsubishi EVO IX-X Gr N - Front Asphalt - Th. 17.5mm	FRP3088
Mitsubishi EVO IX-X Gr N - Front Gravel - Th. 17.5mm	FRP3087
Mitsubishi EVO IX-X Gr N - Rear - Th. 20mm	FRP308
Nascar - Th. 20.0mm	FRP308
Type B28 family; 6 piston D64 wide	FRP3128
VW upgrade Kit 2009 (SEAT Force, Leon II, Ibiza 6L / VW Golf IV-V)	FRP3109
x2.023.21 - Th. 20mm	FRP3024
x2.028.01 - Th. 20mm	FRP3024
x2.029.21 - Th. 20.0mm	FRP308
x2.029.71 - Th. 20.0mm	FRP308
x2.040.01 - Th. 16.0mm	FRP1079
X2.046.01 - Th. 18mm	FRP3070
x6.059.41 - Th. 20.0mm	FRP308
x9.005.91 - Th. 16.0mm	FRP1077
x9.011.01 - Th. 20.0mm	FRP308

PADS FOR RACING CALIPERS
PASTIGLIE PER PINZE DA COMPETIZIONE





...BREMBO

x9.011.31 - Th. 20.0mm	FRP308
x9.014.03 - Th. 20.0mm	FRP308
x9.060.51 - Th. 25.0mm	FRP1078
x9.060.71 - Th. 26mm	FRP3028
x9.066.91 - Th. 16.0mm	FRP1079
X93.41.21/24 (8 Pistons WRC TARMAC & Touring Car)	FRP3113
x93.41.41 - Th. 20.0mm	FRP1064
x93.45.01 - Th. 26mm	FRP3029
x93.45.11 - Th. 27.5mm	FRP3053
x93.73.01 - Th. 20.0mm	FRP1064
x93.73.11 - Th. 20.0mm	FRP1064
x94.44.11 - Th. 21mm	FRP3034
X94.44.21	FRP3004
x94.75.11 - Th. 16.0mm	FRP1079
XA3.02.31/32 (6 POT)	FRP3031
XA5.E8.K1 + XA4.17.K7/K8	FRP3109
XA6.S0.01/04	FRP3103

CAPARO

F.Renault 2010 -> front & rear	FRP3117

CHEVROLET CRUZE CUP

ATE Kit	FRP3122

CL BRAKES

5015W58T17	FRP3078

COLEMAN

GM type - Th. 15mm	FRP3057
Series I,II - Th. 20.0mm	FRP501
Series III	FRP3070
Series IV - Th. 18.0mm	FRP3003

DAKAR

Front axle Paris Dakar rally vehicles	FRP3157

HOWE

GM type - Th. 15mm	FRP3057

JAS

Honda Civic Type R - Rally R3 Gravel [JAS Motorsport]	FRP3105

JFZ / SIERRA

GM type - Th. 15mm	FRP3057
GN series - Th. 20.3mm	FRP503
Mini GN dual - Th. 12.4mm	FRP502
Mini GN single - Th. 13.0mm	FRP506
XL series - Th. 20.3mm	FRP503

KSPORT

12 pistons 380mm	FCP1625





4 pistons 330/356mm	FRP219
6 pistons 286/304mm	FRP216
8 pistons 356mm	FRP3077
8 pistons 380mm	FCP1664

LOCKHEED

LD - 20 - Th. 14.4mm	FCP825
LD -19 - Th. 10.4mm	FCP342

LUCAS GIRLING

"12/3"	FCP815
"17/3"	FCP9
14LF & D14R	FCP809
AR	FRP5002
AR MK5	FRP101
M16	FCP167

MANDO

Mono block 4P Caliper	FCP4671

MWE

Drag 2 piston - Th. 15.0mm	FRP506

OUTLAW

1000 - Th. 13.0mm	FRP506
1500 - Th. 13.0mm	FRP506
2000 / 2500 - Th. 12.4mm	FRP502
3000 / 3500 / 4000 - Th. 20.0mm	FRP501
9000 - Th. 28mm	FRP3059
Bridgebolt 2000 - Th. 12.4mm	FRP504
Bridgebolt 2500 - Th. 12.4mm	FRP504

PBR

Corvette Z06 C6 3 sets front axle 2 sets rear axle	FRP3094

PFC

F3 Brake System FRONT-REAR - Th. 18mm [P7835]	FRP3092

PORSCHE

GT3 Super Cup - Front	FRP3123
GT3 Super Cup 2011 - Rear	FRP302

RACING APPLICATION

FORD WRC	FRP3022

RACING FITMENT

Acura / Honda / Rover (as FCP905 but Th. 19.5mm)	FRP3062
Buick - front and rear	FRP3057
Cadillac, Chevrolet, Jeep, Oldsmobile, Pontiac - front	FRP3057
Ferrari Challenge 3.6 ->Rear, Adaptable to Tarox Caliper	FRP3078
JFZ / Sierra caliper GM type	FRP3057
JFZ / Sierra caliper GN Series / XL Series	FRP503

PADS FOR RACING CALIPERS
PASTIGLIE PER PINZE DA COMPETIZIONE





...RACING FITMENT

JFZ / Sierra caliper Mini GN single	FRP506
Stock Cars	FRP3097

ROTORA

FC2	FCP1562
FC4	FRP3028
FC6	FRP3003
FC8	FCP1664
FF4	FRP1077

TAROX

TAROX B32-6 (6 pots) - adaptable	FRP3078

TOYOTA

TOYOTA Hi-Ace	FRP3127

WILWOOD

Billet Dynalite - Side Inlet	FRP3149
Billet DynaPro Lug Mount Calipers w/Dust Boots	FRP3149
Billet Narrow Dynalite Radial Mount (7816)	FRP3148
Billet Narrow Mount DynaPro (7816)	FRP3148
Billet Powerlite Calipers	FRP3108
Billet Superlite 4 Radial & Lug Mount Calipers	FRP3097
Billet Superlite 6 Lug Mount Caliper (versions taking pad shape 7416)	FRP3154
Billet Superlite 6 Lug Mount Calipers - Type 7420	FRP3097
Billet Superlite 6R Radial Mount Calipers	FRP3097
Cast Iron GM Metric Calipers	FRP3058
Combination Parking Brake Calipers	FCP541
Dynalite b/bolt - Th. 12.4mm	FRP504
Dynalite c/pin - Th. 12.4mm	FRP502
Dynalite single - Th. 13.0mm	FRP506
Dynalite Single Floater Calipers	FRP3104
DynaPro Forged Billet Radial Mount (7816)	FRP3148
DynaPro/Dynalite Single Calipers	FRP3104
Forged DPHA	FRP3149
Forged Narrow Dynalite Lug Mount (7816)	FRP3148
Forged Narrow SL6R and SL4R / ST Radial Mount Calipers	FRP3154
Forged Superlite FSLI/ST Calipers	FRP3097
GM III Calipers	FRP3057
GN III Calipers	FRP503
GT 4000	FRP3070
GT 6000 - Th. 28mm	FRP3059
GT 6000 radius - Th. 28mm	FRP3060
GT III - Th. 28mm	FRP3059
GT-III radius - Th. 28mm	FRP3060
Integra GT - Th. 20mm	FRP3024
Integra HP - Th. 27.5mm	FRP3053
Integra IP - Th. 26mm	FRP3029
IR - GT - Th. 20.0mm	FRP308
LC-GT - Th. 20.0mm	FRP501





Narrow Dynapro Radial Mount	FRP3149
SL-GT - Th. 20.0mm	FRP501
Superlite 4 - Th. 20.0mm	FRP501
Superlite 6 - Th. 20.0mm	FRP501

FERODO®

PAD DRAWINGS



FERODO®
RACING

FCP2

WVA No: 20034
FMSI No: D031


61.8mm = 2.433"

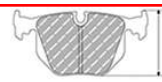
56.6mm = 2.228"


15.0mm = 0.591"


42.0mm = 1.654"

ALFA ROMEO Front / Rear, AUDI Front, BMW Front / Rear, FERRARI Rear, LANCIA Rear, MASERATI Rear, MATRA Front, MERCEDES Rear, OPEL Front / Rear, PORSCHE Front / Rear, SAAB Front, TALBOT Front, VAUXHALL Front / Rear, VOLKSWAGEN Front, VOLVO Rear

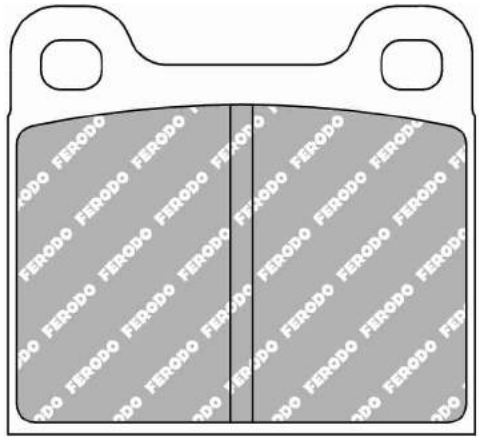

MATERIAL AVAILABILITY						
H	C	R	W	WB	Z	ZB
✓	✉	✓	✉		✓	

CROSS REFERENCE	
BREMBO	07.1715.50
CL BRAKES	4004
FMSI	D031
FMSI	D058
HAWK	HB172 0,595
MINTEX	MDB1002
MINTEX	MDB1068
PAGID	2723
PAGID	4304
PFC	0031.XX
WVA	20034

FERODO RACING

Updated on November 2020

✓ Available
✗ Out of Range
In Introduction
Exhausting
Make to order

FCP3

WVA No: 20009 15,00
FMSI No: D30


55.7mm = 2.193"

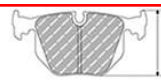
53.5mm = 2.106"


14.5mm = 0.571"


37.5mm = 1.476"

ALFA ROMEO Rear, BMW Rear, DAF Front, DKW Front, DODGE Front, GLAS Front / Rear, NSU Front, OPEL Front, PORSCHE Front / Rear, SAAB Rear, TALBOT Front, VOLVO Front



MATERIAL AVAILABILITY						
H	C	R	W	WB	Z	ZB
✔		✔	✉			

CROSS REFERENCE	
CL BRAKES	4056
FMSI	D30
MINTEX	MDB1012
PAGID	4122
WVA	20009 15,00

✔ Available
✖ Out of Range
In Introduction
Exhausting
Make to order

FERODO RACING

Updated on November 2020

FCP9

WVA No: 20027 16,00
FMSI No: D004


98.4mm = 3.874"

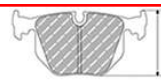
68.0mm = 2.677"


16.0mm = 0.630"


50.8mm = 2.000"

AC Front, ASTON MARTIN Front, BRISTOL Front, FERRARI Front, FIAT Front, JAGUAR Front, JENSEN Front, LOTUS Front, ROVER Front, VOLVO Front

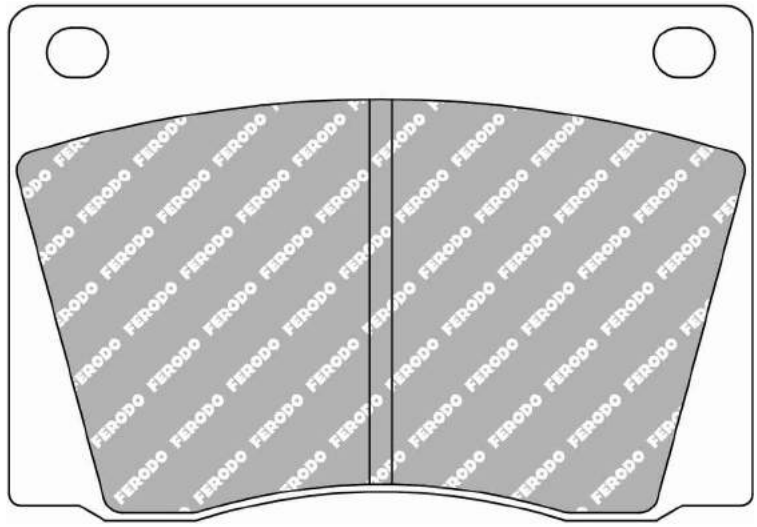

MATERIAL AVAILABILITY						
H	C	R	W	WB	Z	ZB
✔		✔				

CROSS REFERENCE	
CL BRAKES	4114
EBC	DP108
FMSI	D004
MINTEX	MDB1499
MINTEX	MGB522
PAGID	8042
PAGID	ERS496
WVA	20027 16,00

FERODO RACING
Updated on November 2020

Available
Out of Range
In Introduction
Exhausting
Make to order

FCP11

WVA No: 20011 15,00
FMSI No: D045

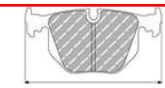
76.7mm = 3.020"

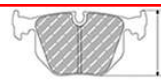
70.0mm = 2.756"


15.0mm = 0.591"


55.0mm = 2.165"

ALFA ROMEO Front, FERRARI Front, GLAS Front, LANCIA Front, MERCEDES Front, OPEL Front, PORSCHE Front / Rear, VAUXHALL Front

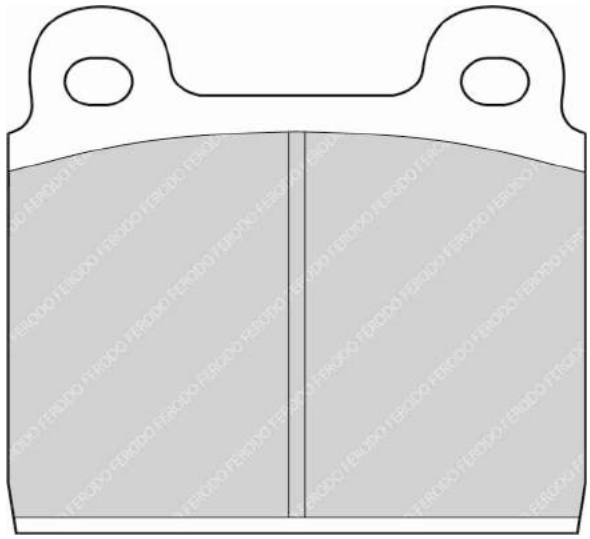

MATERIAL AVAILABILITY						
H	C	R	W	WB	Z	ZB
✔		✔	✉		✔	

CROSS REFERENCE	
CL BRAKES	4003
FMSI	D045
FMSI	D287
FMSI	D45
HAWK	HB171 0,59
MINTEX	MDB1003
MINTEX	MDB1455
PAGID	4501
PAGID	4503
PFC	0045.XX
Raybestos	DR45
WVA	20011 15,00

FCP22


109.0mm = 4.291"

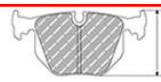
39.0mm = 1.535"


10.0mm = 0.394"


36.0mm = 1.417"

AUTOBIANCHI Rear, FIAT Front / Rear, FSO Rear, LANCIA Rear, PININFARINA Rear, SEAT Rear, TALBOT Rear

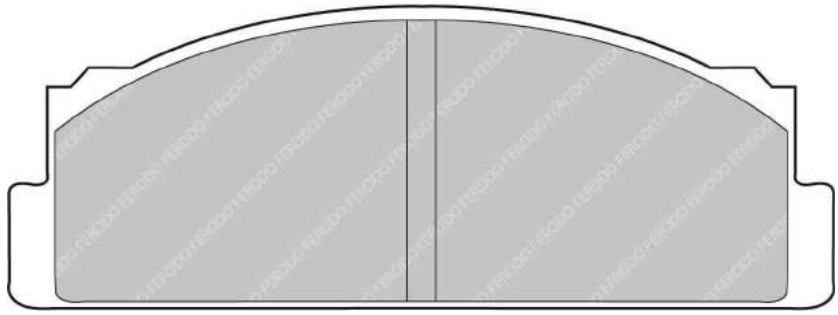

ALSO AVAILABLE		
SHAPE	TH. MM	NOTES
FCP29	17,3	

CROSS REFERENCE	
MINTEX	MDB1008

MATERIAL AVAILABILITY						
H	C	R	W	WB	Z	ZB
✔						

FCP29

WVA No: 20073 17,50
FMSI No: D54


108.9mm = 4.287"

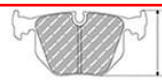
39.0mm = 1.535"


17.3mm = 0.681"


37.0mm = 1.457"

AUTOBIANCHI Front, FIAT Front, FSO Front, INNOCENTI Front, LANCIA Front, POLSKI Front, SEAT Front, YUGO Front

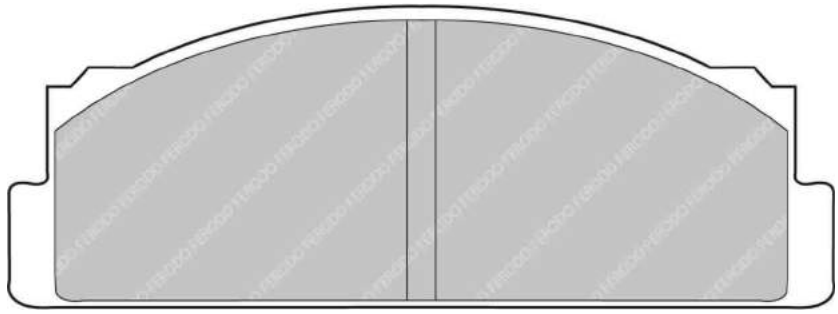

ALSO AVAILABLE		
SHAPE	TH. MM	NOTES
FCP22	10	

CROSS REFERENCE	
FMSI	D54
MINTEX	MDB1013
WVA	20073 17,50

MATERIAL AVAILABILITY						
H	C	R	W	WB	Z	ZB
✔		✔				

Available
Out of Range
In Introduction
Exhausting
Make to order

FCP39

WVA No: 20128 14,70


58.1mm = 2.287"

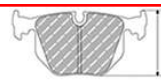
55.1mm = 2.169"


14.6mm = 0.575"


38.0mm = 1.496"

HONDA Front, NISSAN Front

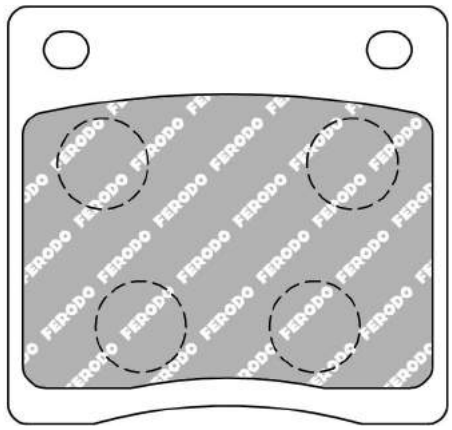

MATERIAL AVAILABILITY						
H	C	R	W	WB	Z	ZB
	✉					

CROSS REFERENCE	
MINTEX	MDB1107
WVA	20128 14,70

FCP72

WVA No: 20140 14,00

FMSI No: D97


108.9mm = 4.287"

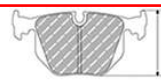
49.0mm = 1.929"


13.5mm = 0.531"


44.0mm = 1.732"

ABARTH Front, ALFA ROMEO Front, CITROEN Front, DACIA Front, FIAT Front, MATRA Rear, NISSAN Front, PEUGEOT Front, RENAULT Front / Rear, RENAULT-ALPINE Front / Rear, TALBOT Front

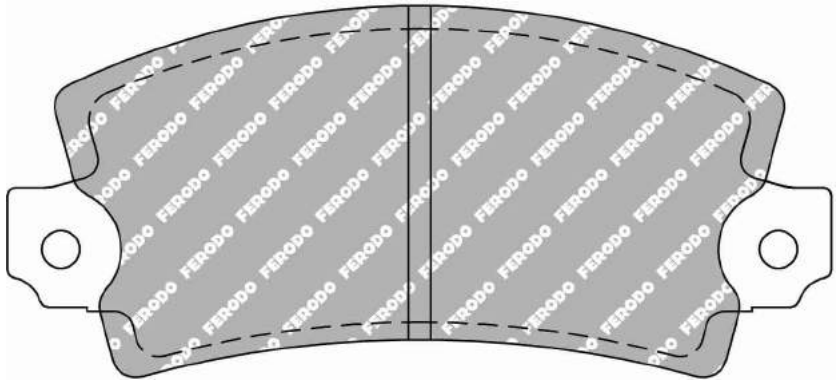

MATERIAL AVAILABILITY						
H	C	R	W	WB	Z	ZB
✓		✓				

CROSS REFERENCE	
CL BRAKES	4062
FMSI	D97
WVA	20140 14,00

FCP93

WVA No: 20641 15,00
FMSI No: D127


55.7mm = 2.193"

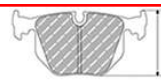
53.0mm = 2.087"


15.0mm = 0.591"


37.5mm = 1.476"

ALFA ROMEO Rear, PORSCHE Rear

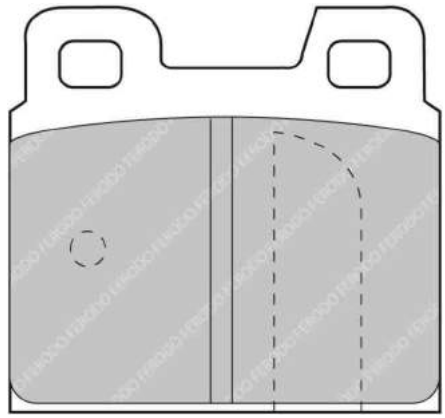

MATERIAL AVAILABILITY						
H	C	R	W	WB	Z	ZB
✔		✔				

CROSS REFERENCE	
FMSI	D127
MINTEX	MDB1072
WVA	20641 15,00

FCP96

WVA No: 20166 16,00


84.0mm = 3.307"

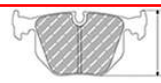
60.6mm = 2.386"


15.8mm = 0.622"


47.0mm = 1.850"

LADA Front

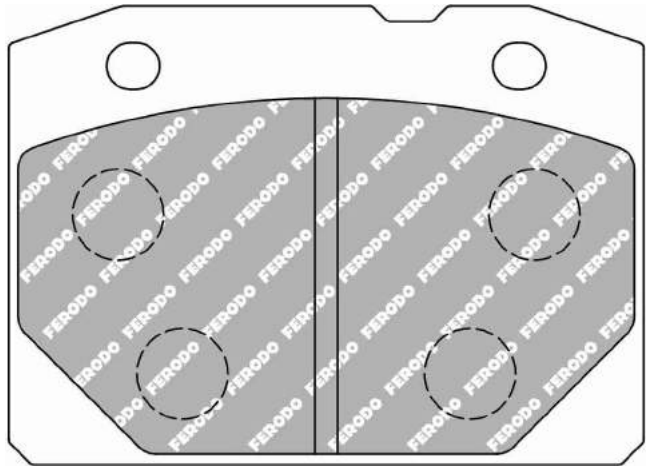

MATERIAL AVAILABILITY						
H	C	R	W	WB	Z	ZB
✔		✔				

CROSS REFERENCE	
MINTEX	MDB1074
WVA	20166 16,00

FERODO RACING

Updated on November 2020

✔ Available
✖ Out of Range
In Introduction
Exhausting
Make to order

FCP105

WVA No: 20228 15,20
FMSI No: D096


61.7mm = 2.429"

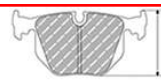
57.0mm = 2.244"


15.2mm = 0.598"


41.0mm = 1.614"

AUDI Front, VOLKSWAGEN Front

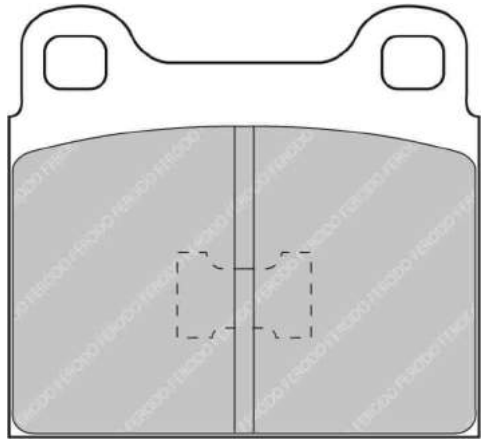

MATERIAL AVAILABILITY						
H	C	R	W	WB	Z	ZB
		✉				

CROSS REFERENCE	
CL BRAKES	4009
FMSI	D096
HAWK	HB395 0,58
MINTEX	MDB1081
WVA	20228 15,20

FCP116

WVA No: 20323 16,50
FMSI No: D109


77.6mm = 3.055"

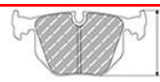
66.0mm = 2.598"


16.5mm = 0.650"


50.1mm = 1.972"

ALFA ROMEO Front, BMW Front, LOTUS Front, MORGAN Front, OPEL Front, VAUXHALL Front

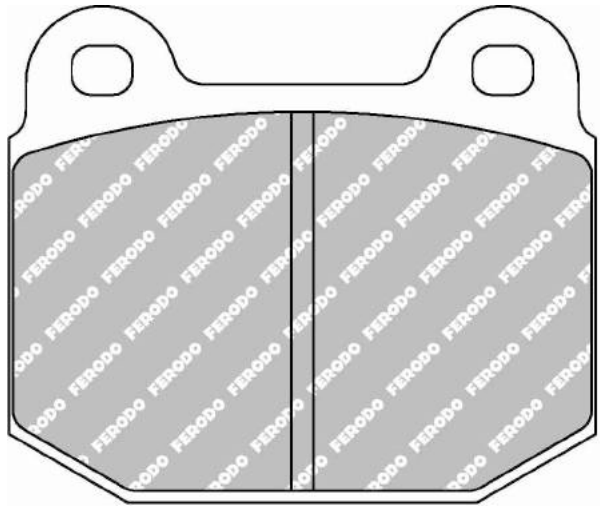

ALSO AVAILABLE		
SHAPE	**TH. MM**	**NOTES**
FCP1562	**14.5**	**different friction area**
FRP3056	**14.5**	

MATERIAL AVAILABILITY						
H	**C**	**R**	**W**	**WB**	**Z**	**ZB**
✔		✔			✉	

CROSS REFERENCE	
CL BRAKES	4060
FMSI	D109
FMSI	D174
HAWK	HB180 0,64
MINTEX	MDB1099
PAGID	4507
PFC	0109.XX
PFC	0174.XX
WVA	20323 16,50

FERODO RACING
Updated on November 2020

✔ Available
✖ Out of Range
In Introduction
Exhausting
Make to order

FCP167

WVA No: 20491 15,20
FMSI No: D330


78.1mm = 3.075"

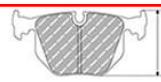
67.0mm = 2.638"


15.4mm = 0.606"


52.0mm = 2.047"

AC Front, CATERHAM Front, FORD Front, HYUNDAI Front, LOTUS Front, ROVER Front

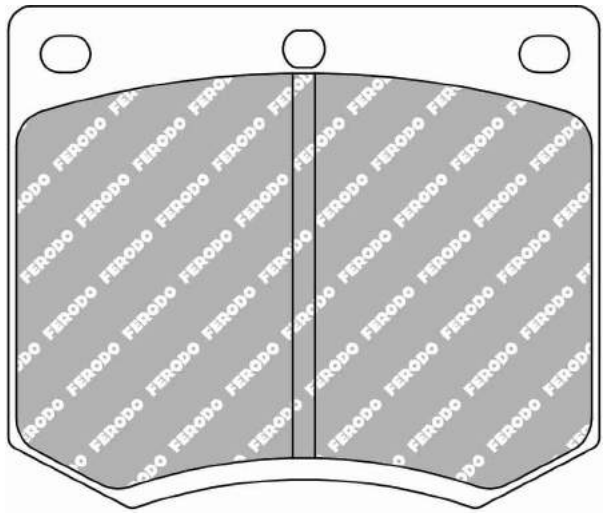

MATERIAL AVAILABILITY						
H	C	R	W	WB	Z	ZB
✔	✔	✔	✉		✔	

CROSS REFERENCE	
CL BRAKES	4085
EBC	DP2291
FMSI	D330
MINTEX	MGB633
PAGID	4905
WVA	20491 15,20

FCP170

WVA No: 20476 15,00


128.1mm = 5.043"

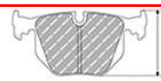
55.0mm = 2.165"


15.0mm = 0.591"


48.0mm = 1.890"

ASIA MOTORS Front, MAZDA Front, MITSUBISHI Front, TOYOTA Front

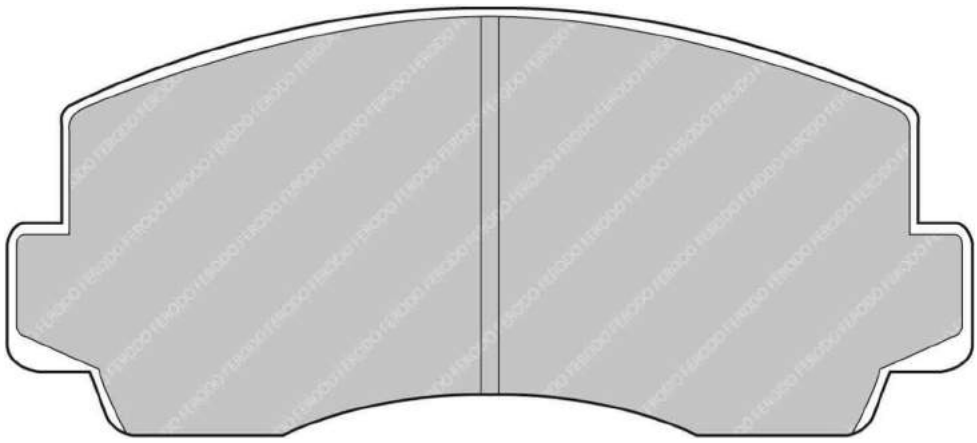

MATERIAL AVAILABILITY						
H	C	R	W	WB	Z	ZB
	✔					

CROSS REFERENCE	
MINTEX	MDB1607
PFC	0195
WVA	20476 15,00

✔ Available
✖ Out of Range
In Introduction
Exhausting
Make to order

FERODO RACING

Updated on November 2020

FCP173

WVA No: 20939 15,90
FMSI No: D378


100.0mm = 3.937"

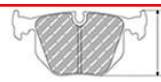
59.0mm = 2.323"


15.5mm = 0.610"


43.9mm = 1.728"

DAEWOO Front, OPEL Front, VAUXHALL Front

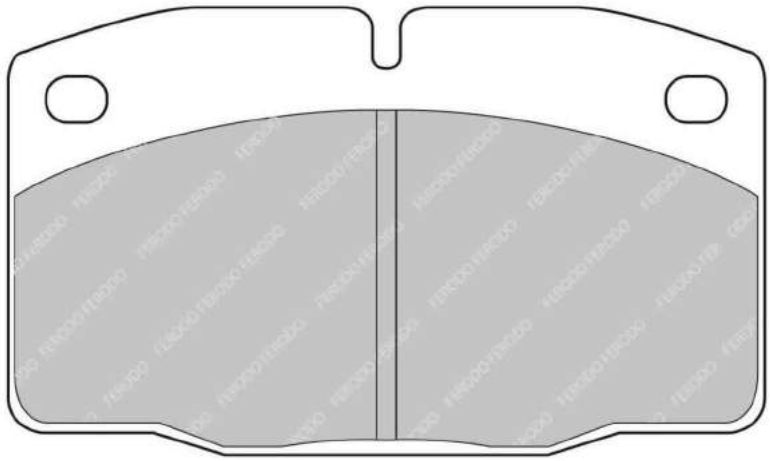

MATERIAL AVAILABILITY						
H	C	R	W	WB	Z	ZB
✔		✔				

CROSS REFERENCE	
BREMBO	07.8301.02
EBC	DP2325
FMSI	D378
MINTEX	MDB1141
WVA	20939 15,90

FERODO RACING

Updated on November 2020

✔ Available
✖ Out of Range
In Introduction
Exhausting
Make to order

FCP206

WVA No: 20640-20753 18,60
FMSI No: D350



FERRARI Rear, FORD Front, KIA Front, TVR Front

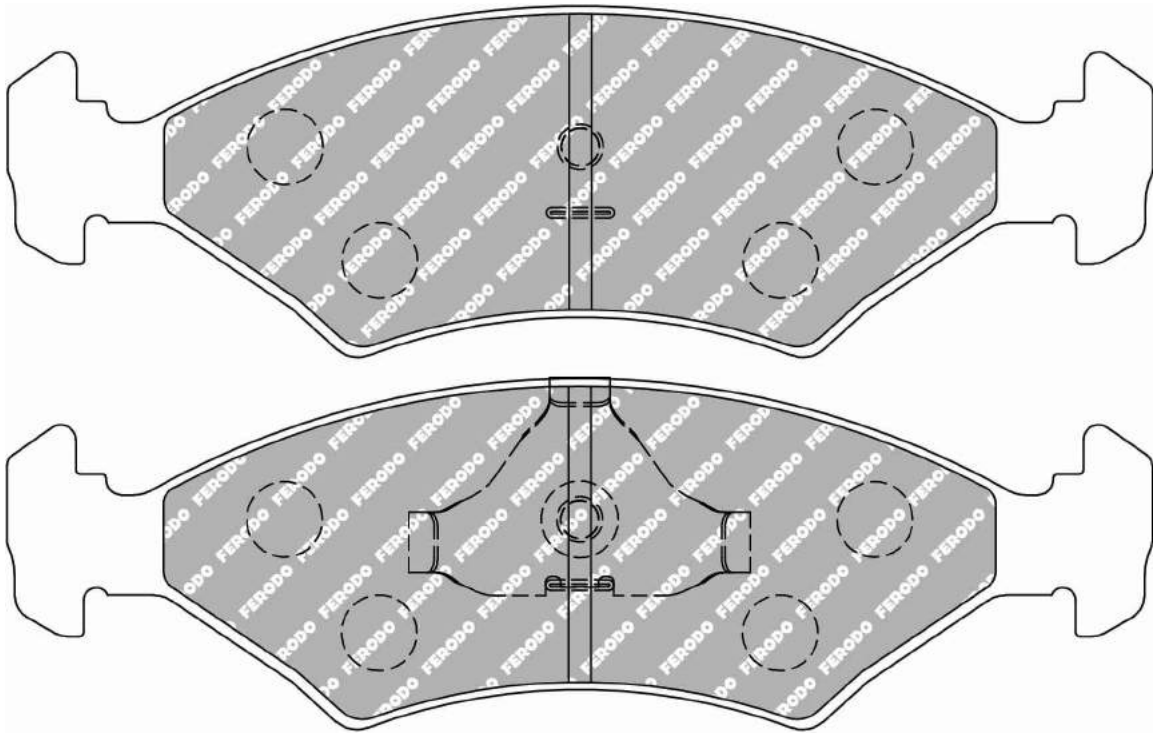

MATERIAL AVAILABILITY						
H	C	R	W	WB	Z	ZB
✔		✔			✉	

CROSS REFERENCE	
BREMBO	07.8301.03
CL BRAKES	4016
FMSI	D350
MINTEX	MDB1175
PAGID	4823
PFC	0350
WVA	20640-20753 18,60

✔ Available
✖ Out of Range
In Introduction
Exhausting
Make to order

FERODO RACING

Updated on November 2020

FCP253


84.0mm = 3.307"

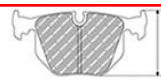
74.0mm = 2.913"


12.7mm = 0.500"


45.0mm = 1.772"

CITROEN Front, PEUGEOT Front

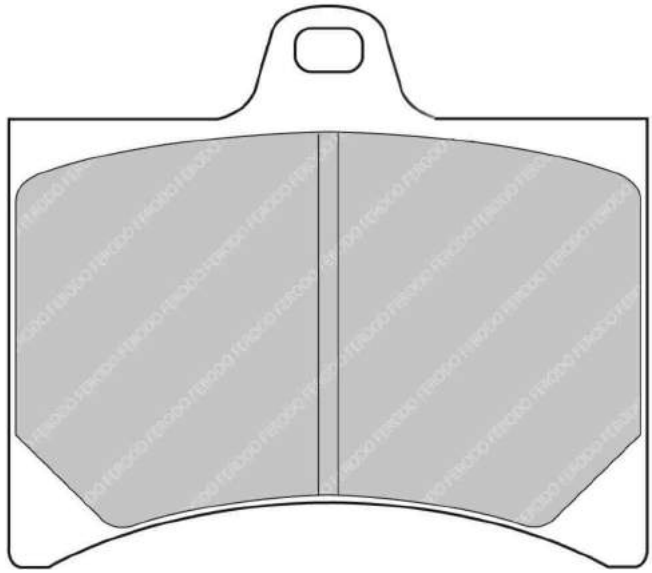

MATERIAL AVAILABILITY						
H	C	R	W	WB	Z	ZB

CROSS REFERENCE	
MINTEX	MDB1155
TEXTAR	20594

FERODO RACING

Updated on November 2020

Available
Out of Range
In Introduction
Exhausting
Make to order

FCP256

WVA No: 20629 20,00
FMSI No: D253



158.5mm = 6.240"
158.5mm = 6.240"

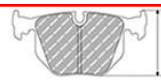

57.0mm = 2.244"
57mm = 2.244"



19.5mm = 0.768"
19.5mm = 0.768"



52.0mm = 2.047"
52mm = 2.047"

BMW Front, FERRARI Front, MASERATI Front, PORSCHE Front

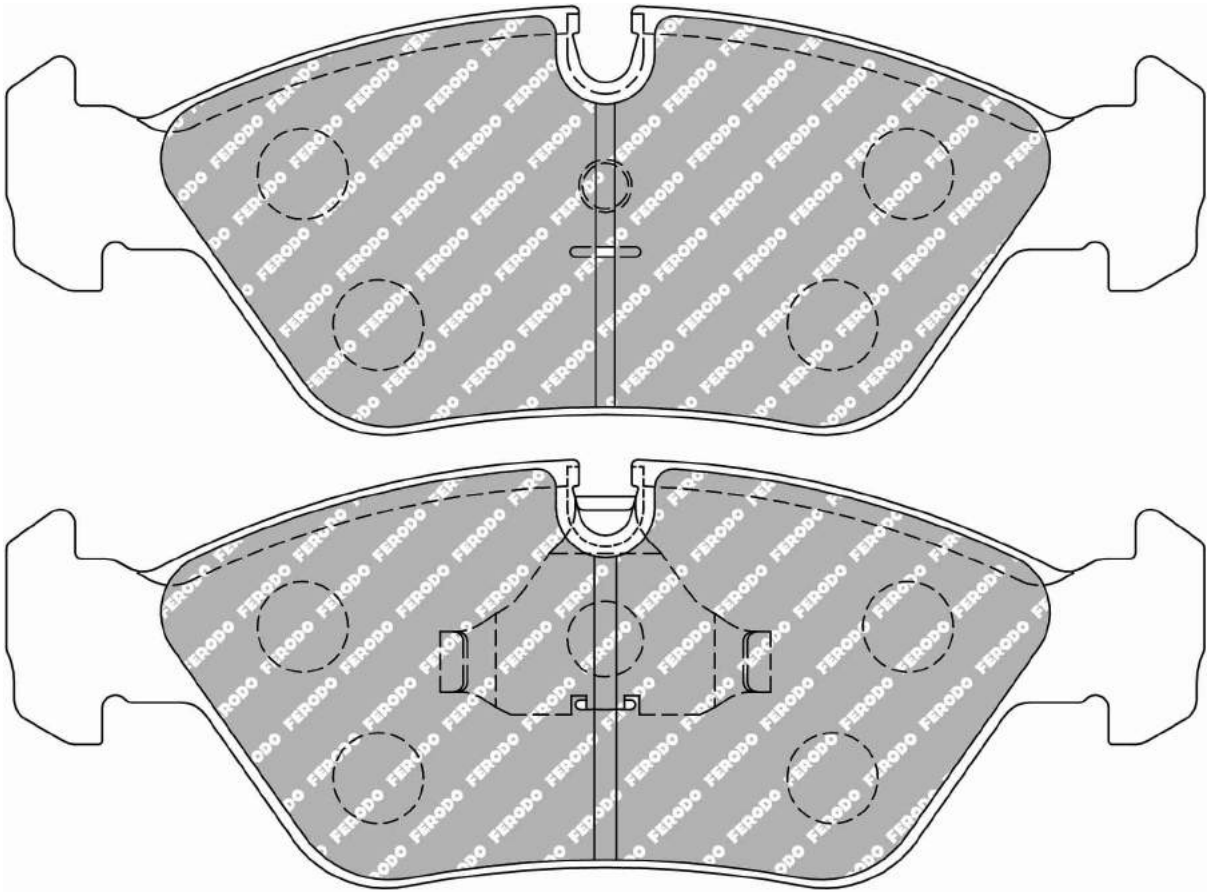

MATERIAL AVAILABILITY						
H	C	R	W	WB	Z	ZB
✔		✔				

CROSS REFERENCE	
CL BRAKES	4025
FMSI	D253
FMSI	D395
HAWK	HB137 0,69
MINTEX	MDB1230
PAGID	1144
PFC	0253.XX
PFC	0395.XX
WVA	20629 20,00

✔ Available
✖ Out of Range
In Introduction
Exhausting
Make to order

FERODO RACING

Updated on November 2020

FCP276

WVA No: 20907 18,00
FMSI No: D298


151.5mm = 5.965"

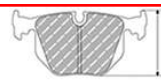
49.0mm = 1.929"


18.0mm = 0.709"


46.5mm = 1.831"

AC Front, FORD Front

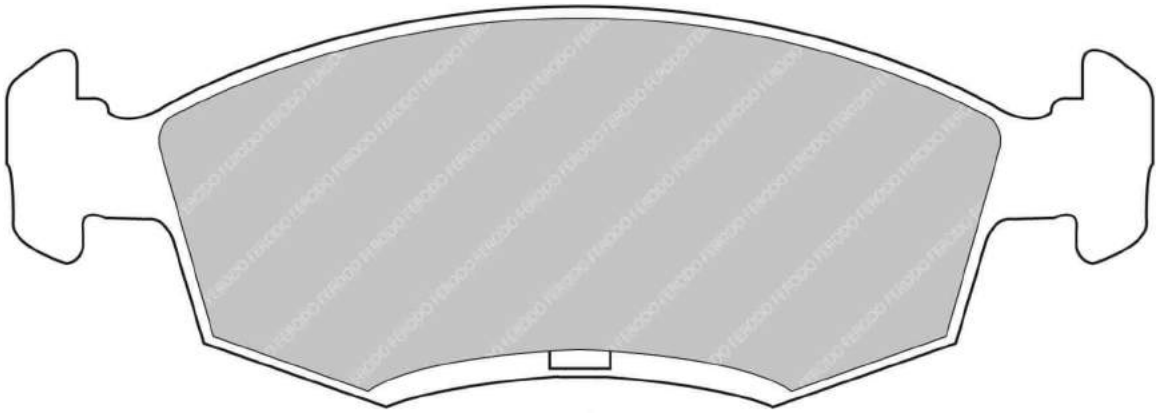

MATERIAL AVAILABILITY						
H	C	R	W	WB	Z	ZB
✔		✔				

CROSS REFERENCE	
BREMBO	07.8301.04
CL BRAKES	4023
FMSI	D298
MINTEX	MDB1290
WVA	20907 18,00

FERODO RACING
Updated on November 2020

Available
Out of Range
In Introduction
Exhausting
Make to order

FCP296

WVA No: 20675 17,00
FMSI No: D279


125.2mm = 4.929"
125.2mm = 4.929"

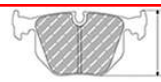
38.2mm = 1.504"
38.2mm = 1.504"


16.2mm = 0.638"
16.2mm = 0.638"


31.0mm = 1.220"
31.0mm = 1.220"

BMW Rear

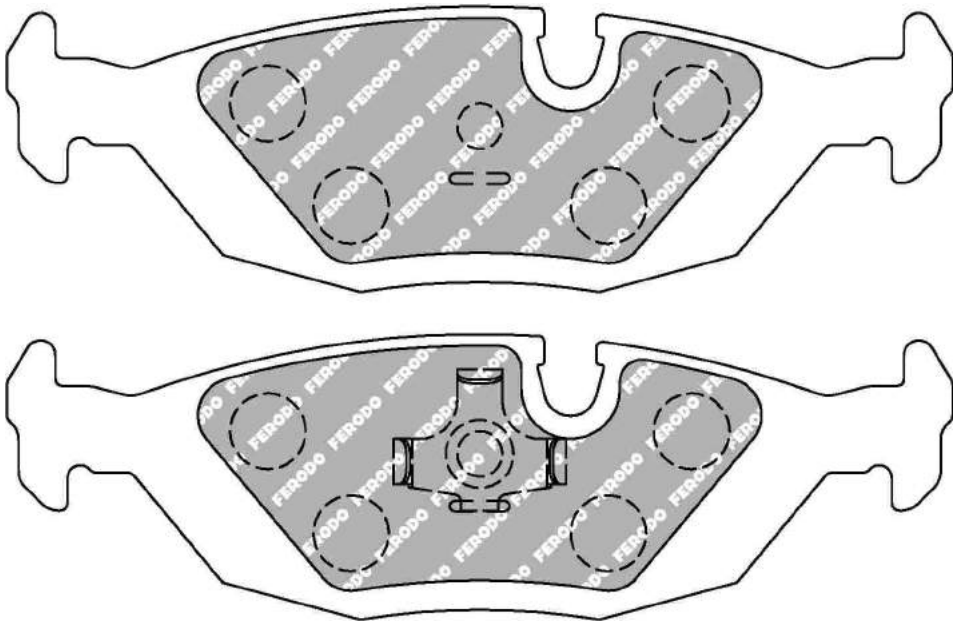

MATERIAL AVAILABILITY						
H	C	R	W	WB	Z	ZB
✔		✔	✉			

CROSS REFERENCE	
FMSI	D279
HAWK	HB399 0,63
MINTEX	MDB1239
PAGID	1141
WVA	20675 17,00

FCP308

WVA No: 20870 15,00
FMSI No: D242


120.0mm = 4.724"

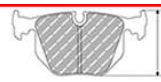
48.0mm = 1.890"


15.0mm = 0.591"


43.0mm = 1.693"

CHEVROLET Front, GEO Front, TOYOTA Front



MATERIAL AVAILABILITY						
H	C	R	W	WB	Z	ZB
✔		✔				

CROSS REFERENCE	
AP RACING	735
FMSI	D242
FMSI	D356
FMSI	DR20
HAWK	HB167
HAWK	HB191 0,59
MINTEX	MDB1251
PFC	0242.XX
PFC	0356.XX
Raybestos	DR735
WVA	20870 15,00

FERODO RACING

Updated on November 2020

Available
Out of Range
In Introduction
Exhausting
Make to order

FCP342

WVA No: 20053 10,00
FMSI No: D064


59.5mm = 2.343"

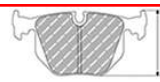
52.0mm = 2.047"


10.4mm = 0.409"


39.0mm = 1.535"

RENAULT Rear, ROVER Front

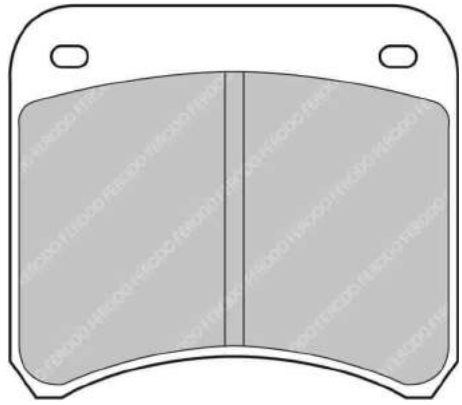

MATERIAL AVAILABILITY						
H	C	R	W	WB	Z	ZB
✓	✓	✓	✗		✓	

CROSS REFERENCE	
AP RACING	CP2195D38
CL BRAKES	5000W38T10
FMSI	D064
FMSI	D401
HAWK	HB117
MINTEX	MLB19
PAGID	1362
PFC	7719
Raybestos	DR401
Wilwood	5310
WVA	20053 10,00

FCP351

WVA No: 20775 18,20
FMSI No: D125


108.9mm = 4.287"


47.0mm = 1.850"


18.0mm = 0.709"


42.4mm = 1.669"

AUTOBIANCHI Front, FIAT Front, INNOCENTI Front, LANCIA Front, SEAT Front

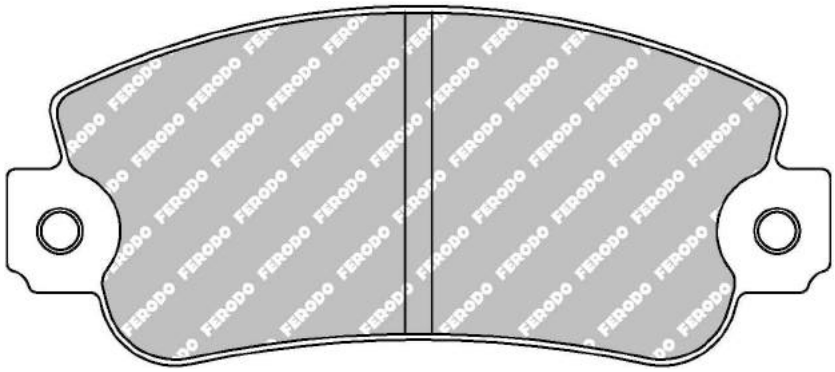

ALSO AVAILABLE		
SHAPE	TH. MM	NOTES
FCP360	12	

MATERIAL AVAILABILITY						
H	C	R	W	WB	Z	ZB
✓		✓			✓	

CROSS REFERENCE	
FMSI	D125
MINTEX	MDB1218
WVA	20775 18,20

✓ Available
✗ Out of Range
In Introduction
Exhausting
Make to order

FERODO RACING

Updated on November 2020

FCP360

WVA No: 20841 12,00


108.9mm = 4.287"

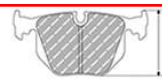
47.0mm = 1.850"


12.0mm = 0.472"


42.4mm = 1.669"

FIAT Rear, LANCIA Rear, RENAULT Rear, RENAULT-ALPINE Rear

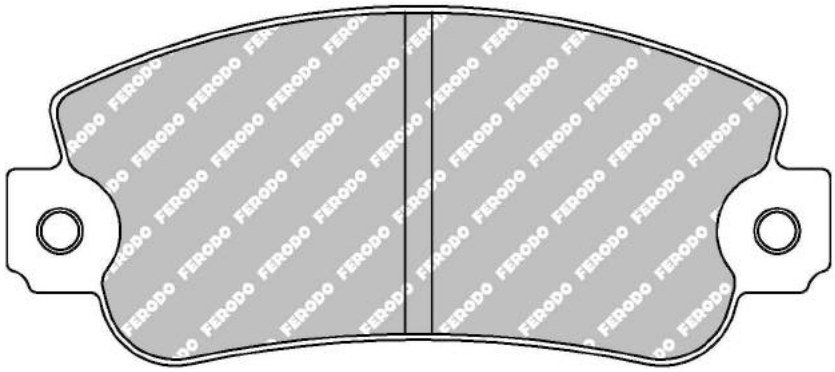

No bevel on backplate

ALSO AVAILABLE		
SHAPE	TH. MM	NOTES
FCP351	18	

MATERIAL AVAILABILITY						
H	C	R	W	WB	Z	ZB
✔						

CROSS REFERENCE	
BREMBO	07.8301.05
MINTEX	MDB1088
MINTEX	MDB1258
MINTEX	MDB1962
PAGID	1703
WVA	20841 12,00

FCP370

WVA No: 20833 17,00
FMSI No: D147


104.7mm = 4.122"

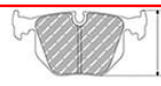
67.0mm = 2.638"


17.3mm = 0.681"


45.7mm = 1.799"

ABARTH Front, ALFA ROMEO Front, AUDI Front, AUTOBIANCHI Front, FIAT Front, INNOCENTI Front, LANCIA Front, VOLVO Front

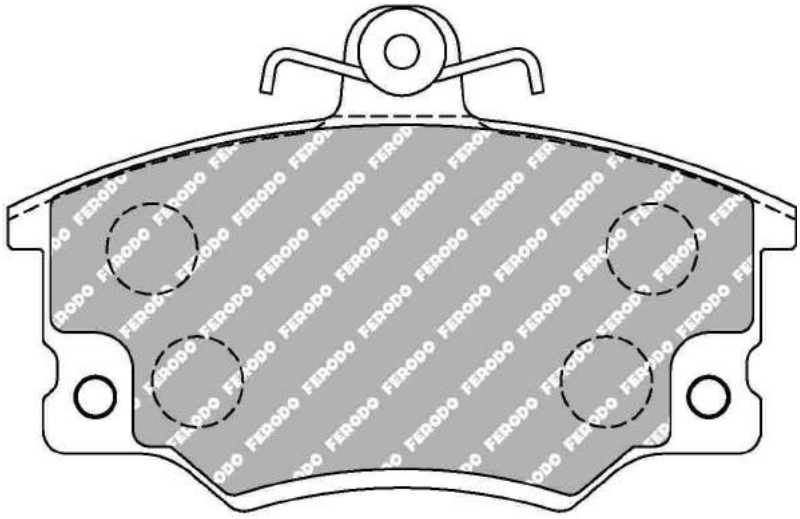

MATERIAL AVAILABILITY						
H	C	R	W	WB	Z	ZB
✔	✉	✔	✉		✔	

CROSS REFERENCE	
BREMBO	07.8301.06
CL BRAKES	4028
FMSI	D147
MINTEX	MDB1240
MINTEX	MDB1257
MINTEX	MDB2758
WVA	20833 17,00

FERODO RACING

Updated on November 2020

✔ Available
✖ Out of Range
In Introduction
Exhausting
✉ Make to order

FCP372

WVA No: 20328 12,90
FMSI No: D283


107.9mm = 4.248"

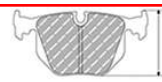
39.6mm = 1.559"


13.1mm = 0.516"


38.2mm = 1.504"

MAZDA Rear

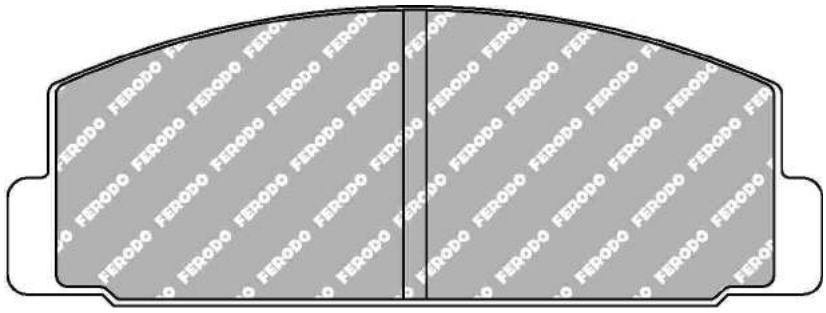

MATERIAL AVAILABILITY						
H	C	R	W	WB	Z	ZB
✓		✗	✉			

CROSS REFERENCE	
FMSI	D283
HAWK	HB158 0,515
MINTEX	MDB2309
WVA	20328 12,90

FCP385

WVA No: 20889 17,30
FMSI No: D307


138.0mm = 5.433"

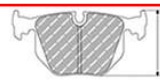
51.4mm = 2.024"


17.0mm = 0.669"


45.3mm = 1.783"

SEAT Front, VOLKSWAGEN Front

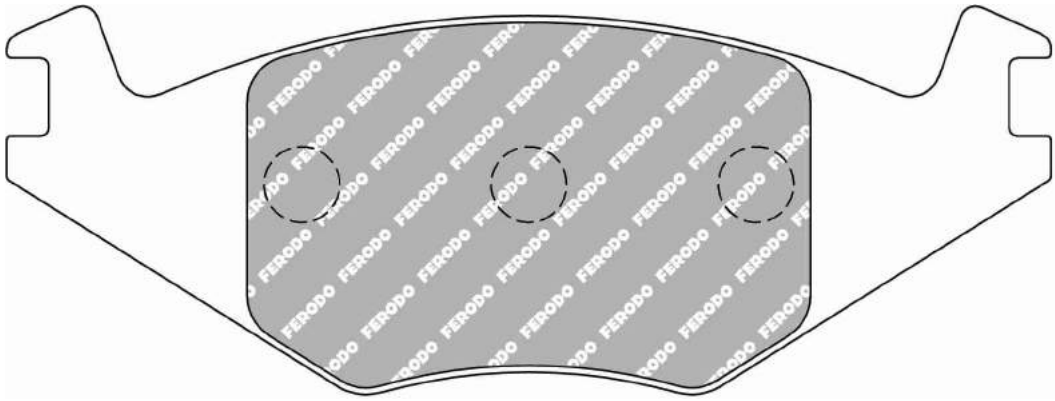

MATERIAL AVAILABILITY						
H	C	R	W	WB	Z	ZB
✉						

CROSS REFERENCE	
BREMBO	07.8301.07
CL BRAKES	4021
FMSI	D307
MINTEX	MDB1273
MINTEX	MDB1436
PAGID	2130
WVA	20889 17,30

FCP392

WVA No: 20887 15,30
FMSI No: D280



138.0mm = 5.433"
138.0mm = 5.433"

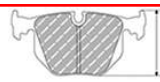

49.3mm = 1.941"
51.4mm = 2.024"



15.3mm = 0.602"
15.3mm = 0.602"



45.3mm = 1.783"
45.3mm = 1.783"

SEAT Front, VOLKSWAGEN Front

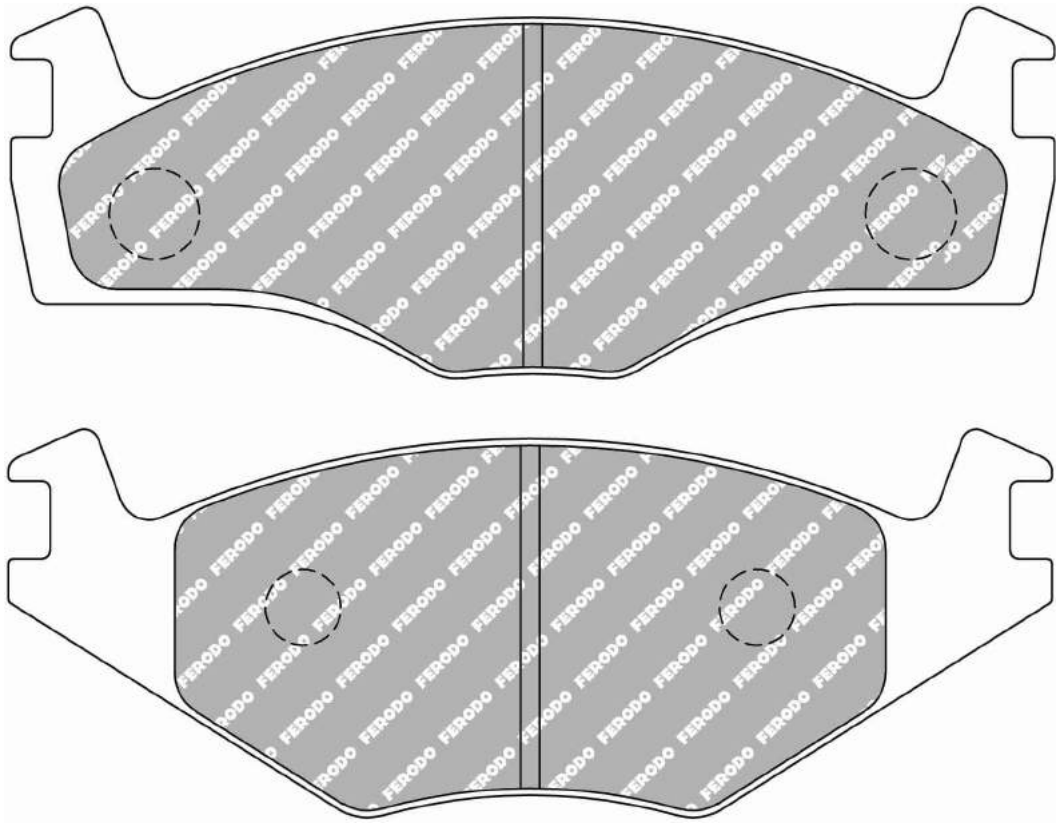

ALSO AVAILABLE		
SHAPE	TH. MM	NOTES
FCP419	19.7	

MATERIAL AVAILABILITY						
H	C	R	W	WB	Z	ZB
✓		✓	✉			

CROSS REFERENCE	
BREMBO	07.8301.08
BREMBO	07.8301.12
BREMBO	07.8301.49
CL BRAKES	4021
FMSI	D280
FMSI	D569
HAWK	HB189 0,55
MINTEX	MDB1266
PAGID	4011
PFC	0280.XX
WVA	20887 15,30

FERODO RACING

Updated on November 2020

✓ Available
✗ Out of Range
In Introduction
Exhausting
Make to order

FCP393

WVA No: 20905 18,00
FMSI No: D371


105.0mm = 4.134"

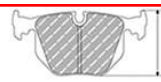
54.0mm = 2.126"


18.0mm = 0.709"


42.3mm = 1.665"

CITROEN Front, PEUGEOT Front, RENAULT Front, RENAULT-ALPINE Rear

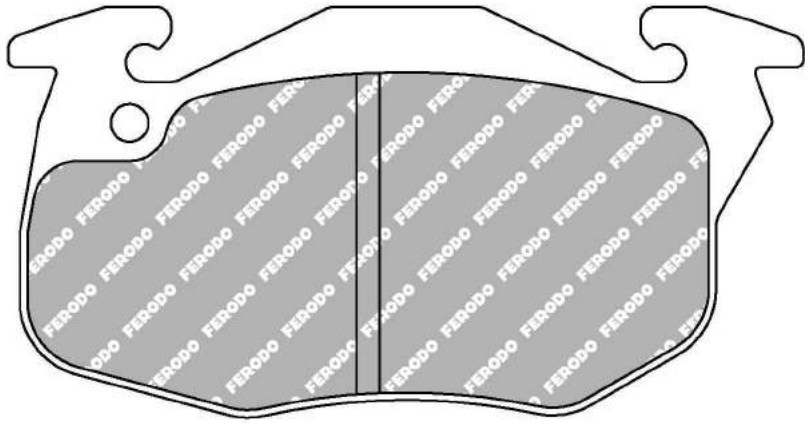

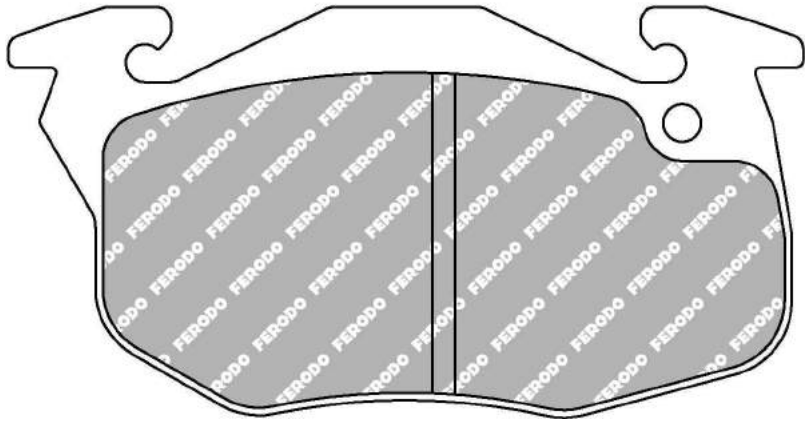

Set = 1 left / 1 right

MATERIAL AVAILABILITY						
H	C	R	W	WB	Z	ZB
✔		✔				

CROSS REFERENCE	
BREMBO	07.8301.09
CL BRAKES	4007
FMSI	D371
MINTEX	MDB1291
PAGID	1609
WVA	20905 18,00

✔ Available
✖ Out of Range
In Introduction
Exhausting
Make to order

FERODO RACING

Updated on November 2020

FCP399

WVA No: 21088 17,00
FMSI No: D163


89.7mm = 3.531"

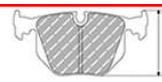
68.0mm = 2.677"


17.0mm = 0.669"


53.0mm = 2.087"

BMW Front, FORD Front, GINETTA Front / Rear, LAMBORGHINI Front, MASERATI Front

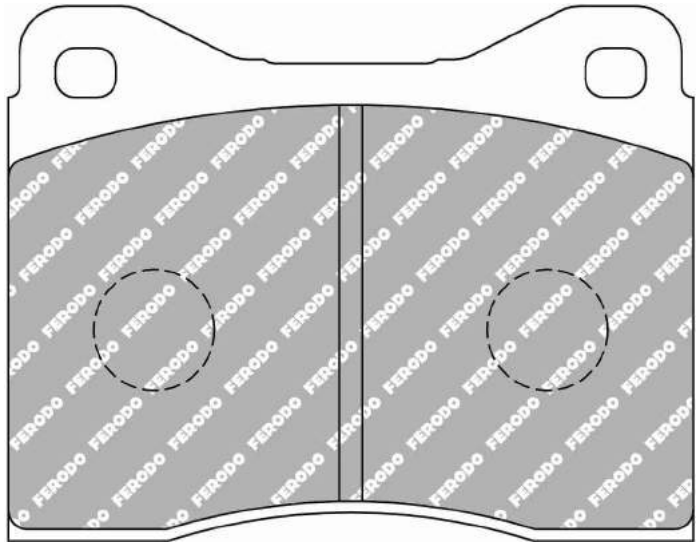

MATERIAL AVAILABILITY						
H	C	R	W	WB	Z	ZB
✔		✔				

CROSS REFERENCE	
CL BRAKES	4014
EBC	DP753
FMSI	D163
HAWK	HB206 0,565
MINTEX	MDB1323
PFC	0163.XX
WVA	21088 17,00

FERODO RACING
Updated on November 2020

✔ Available
✖ Out of Range
In Introduction
Exhausting
Make to order

FCP406

WVA No: 21388 18,50


129.9mm = 5.114"

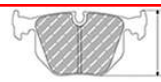
55.0mm = 2.165"


17.7mm = 0.697"


51.2mm = 2.016"

PEUGEOT Front, RENAULT Front, RENAULT-ALPINE Front

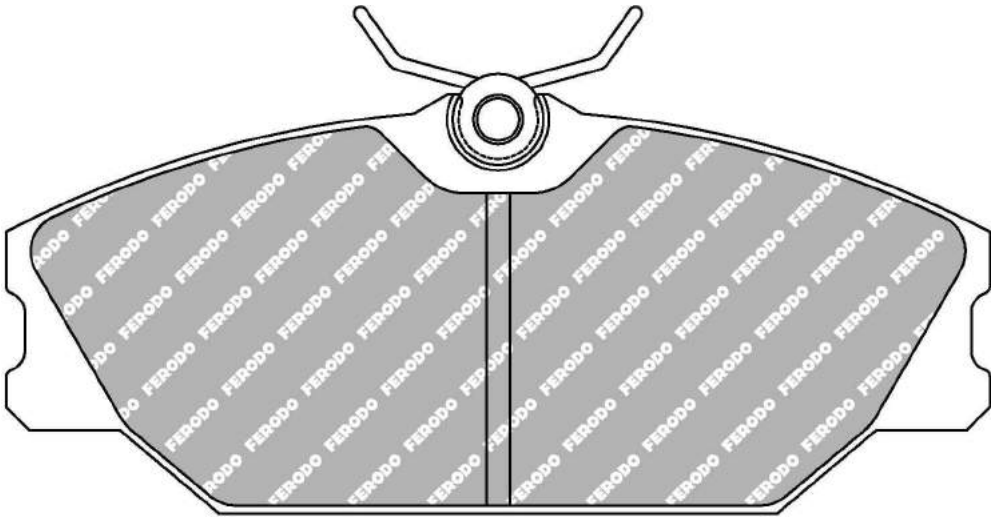

MATERIAL AVAILABILITY						
H	C	R	W	WB	Z	ZB
✔		✔			✔	

CROSS REFERENCE	
BREMBO	07.8301.10
MINTEX	MDB1316
WVA	21388 18,50

FCP408

WVA No: 21079 13,75
FMSI No: D382


89.9mm = 3.539"

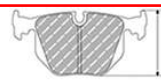
54.0mm = 2.126"


12.5mm = 0.492"


34.5mm = 1.358"

CATERHAM Rear, FORD Rear, GINETTA Rear, MERCURY Front, TVR Rear

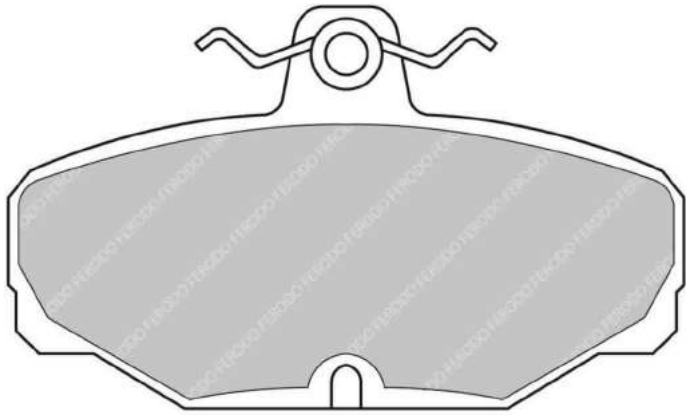

MATERIAL AVAILABILITY						
H	C	R	W	WB	Z	ZB
✔		✔			✉	

CROSS REFERENCE	
CL BRAKES	4035
EBC	DP617
FMSI	D382
MINTEX	MDB1286
MINTEX	MDB1639
PAGID	1163
PFC	0382
WVA	21079 13,75

FCP409

WVA No: 21103 14,50


88.0mm = 3.465"

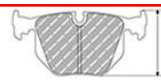
46.0mm = 1.811"


14.4mm = 0.567"


41.7mm = 1.642"

ALFA ROMEO Rear, AUDI Rear, FIAT Rear, LANCIA Rear

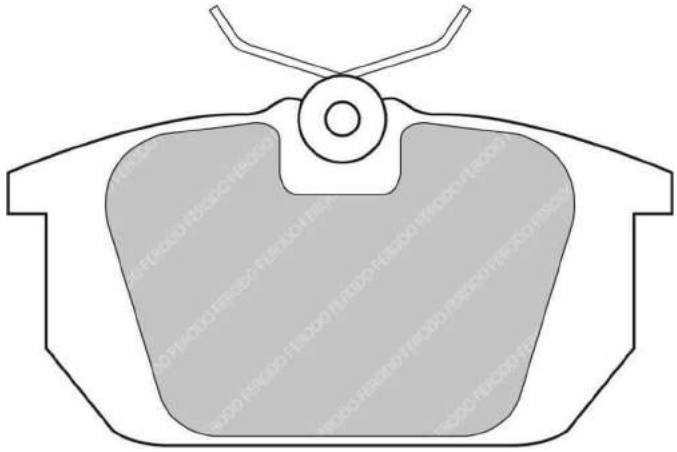

MATERIAL AVAILABILITY						
H	C	R	W	WB	Z	ZB
✔		✔				

CROSS REFERENCE	
BREMBO	07.8301.11
MINTEX	MDB1309
WVA	21103 14,50

FCP415

WVA No: 20941 19,30

FMSI No: D423


108.3mm = 4.264"

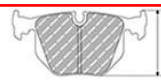
60.0mm = 2.362"


19.3mm = 0.760"


52.0mm = 2.047"

MERCEDES Front

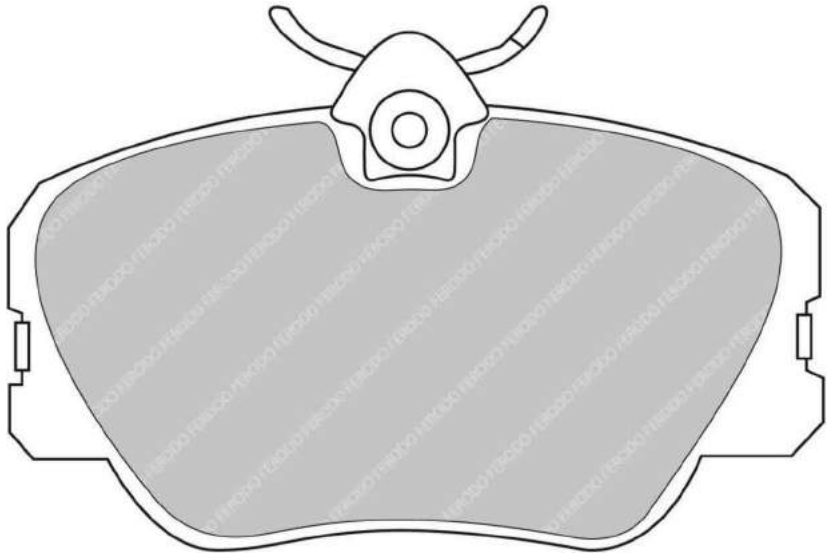

MATERIAL AVAILABILITY						
H	C	R	W	WB	Z	ZB
✔		✔				

CROSS REFERENCE	
FMSI	D423
MINTEX	MDB1312
MINTEX	MDB1437
PAGID	1190
WVA	20941 19,30

FERODO RACING

Updated on November 2020

Available
Out of Range
In Introduction
Exhausting
Make to order

FCP419

WVA No: 20887 19,70



138.0mm = 5.433"
138.0mm = 5.433"

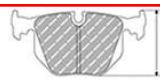

49.3mm = 1.941"
51.4mm = 2.024"



19.7mm = 0.776"
19.7mm = 0.776"



45.3mm = 1.783"
45.3mm = 1.783"

SEAT Front, VOLKSWAGEN Front

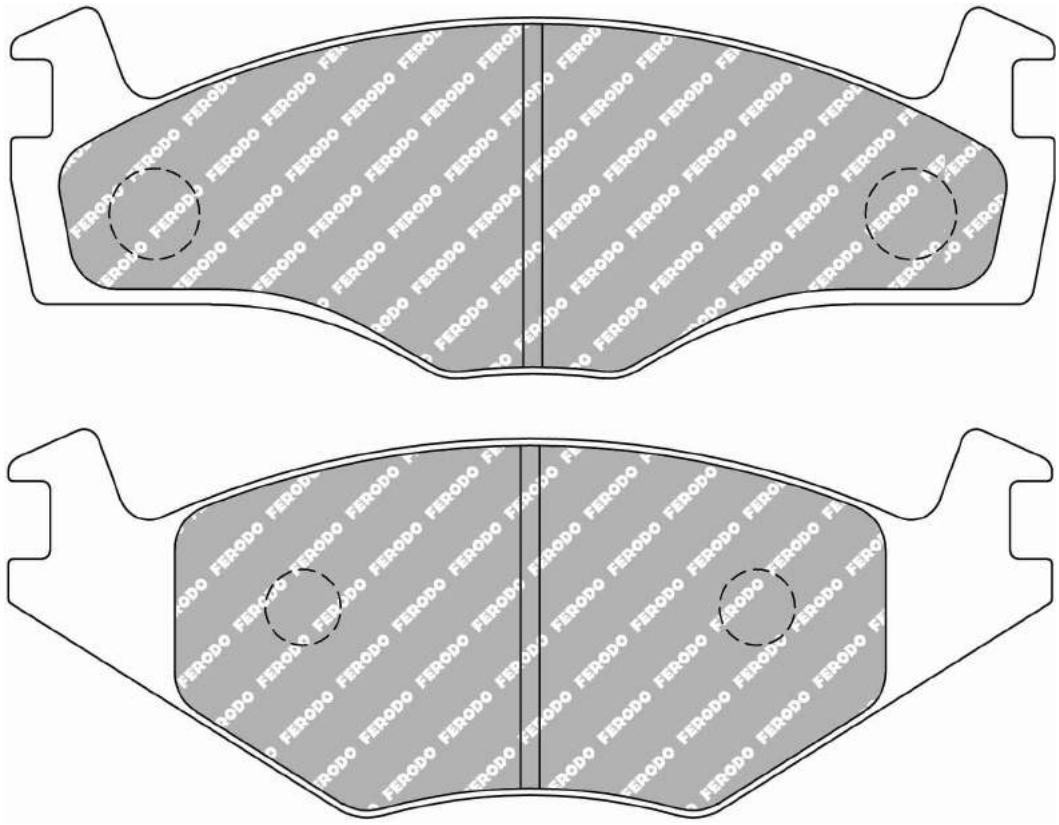

ALSO AVAILABLE		
SHAPE	TH. MM	NOTES
FCP392	15.3	

MATERIAL AVAILABILITY						
H	C	R	W	WB	Z	ZB
✔						

CROSS REFERENCE	
MINTEX	CVP020
MINTEX	CVP020K
MINTEX	MDB1267
WVA	20887 19,70

✔ Available
✘ Out of Range
In Introduction
Exhausting
Make to order

FERODO RACING

Updated on November 2020

FCP434

WVA No: 20923 17,50


90.0mm = 3.543"

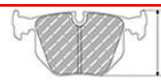
65.0mm = 2.559"


17.0mm = 0.669"


42.5mm = 1.673"

CITROEN Front, PEUGEOT Front

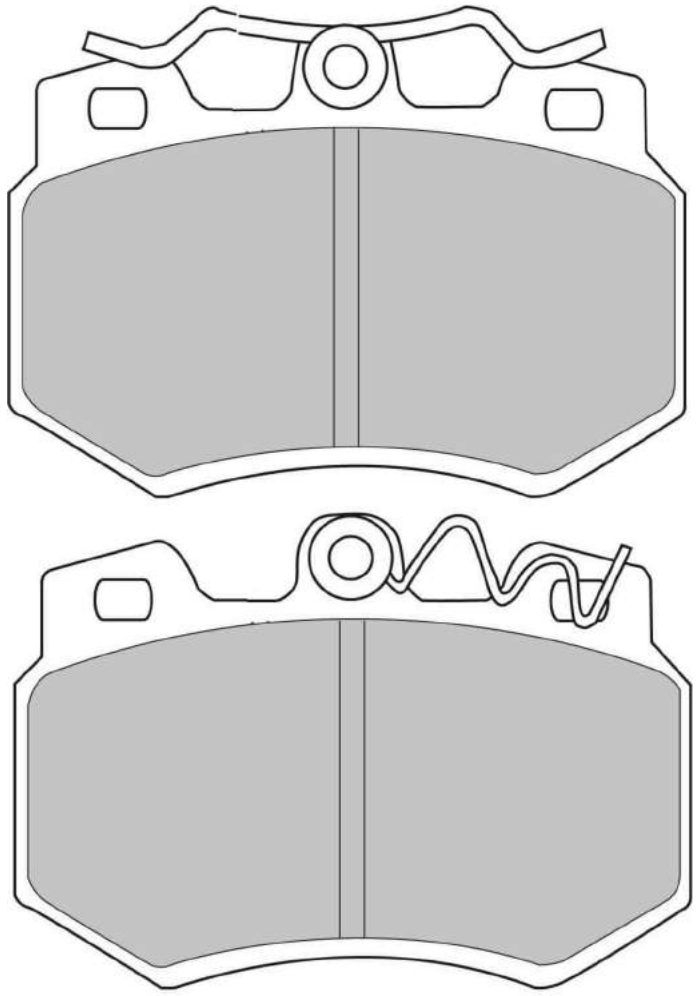

MATERIAL AVAILABILITY						
H	C	R	W	WB	Z	ZB
✔		✉				

CROSS REFERENCE	
BREMBO	07.8301.13
MINTEX	MDB1327
WVA	20923 17,50

FERODO RACING

Updated on November 2020

✔ Available
✖ Out of Range
In Introduction
Exhausting
Make to order

FCP441

WVA No: 21098 16,00


100.0mm = 3.937"

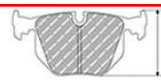
53.0mm = 2.087"


16.0mm = 0.630"


41.0mm = 1.614"

ALFA ROMEO Front, NISSAN Front

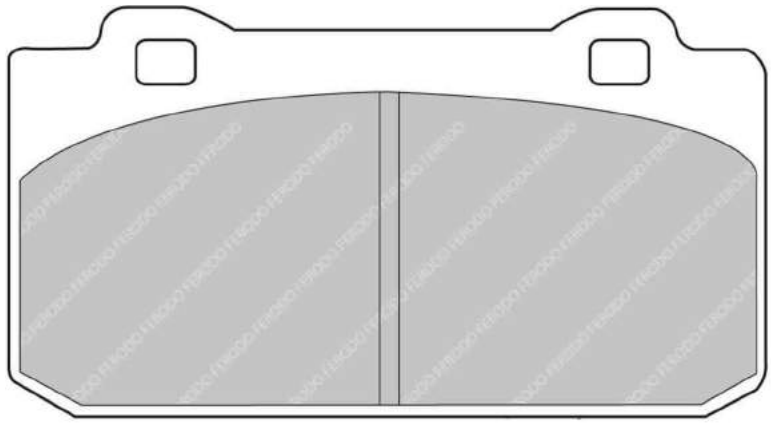

MATERIAL AVAILABILITY						
H	C	R	W	WB	Z	ZB
	✗	✓				

CROSS REFERENCE	
MINTEX	MDB1357
WVA	21098 16,00

FCP448

WVA No: 20323 16,50
FMSI No: D0109


76.8mm = 3.024"

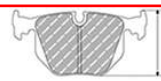
62.2mm = 2.449"


15.0mm = 0.591"


44.6mm = 1.756"

ALFA ROMEO Front, OPEL Front

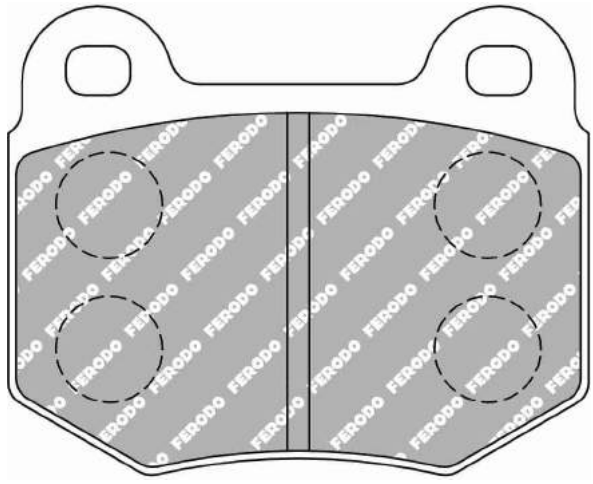

MATERIAL AVAILABILITY						
H	C	R	W	WB	Z	ZB
✓		✓	✉			

CROSS REFERENCE	
FMSI	D0109
FMSI	D961
HAWK	HB180 0,64
MINTEX	MDB1361
MINTEX	MTX1890
PFC	0174.XX
Raybestos	DR961
WVA	20323 16,50

FCP451

WVA No: 20877 17,50
FMSI No: D345



FERRARI Front / Rear, MASERATI Rear, PORSCHE Front / Rear

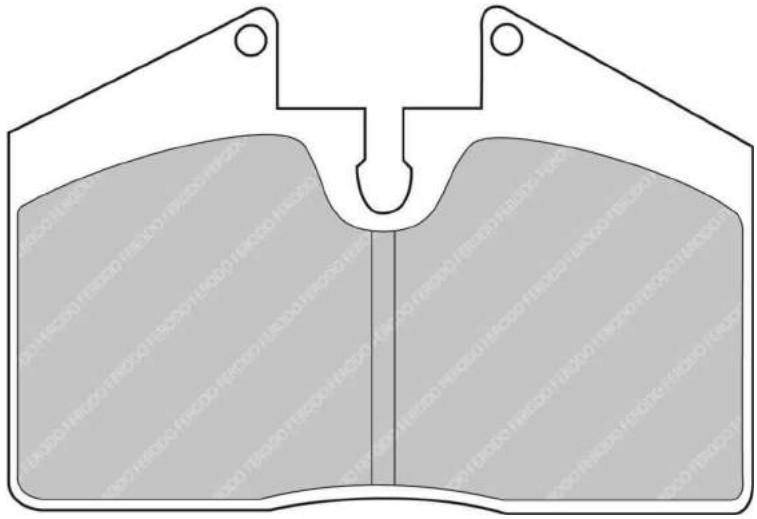

ALSO AVAILABLE		
SHAPE	TH. MM	NOTES
FRP3069	16	

MATERIAL AVAILABILITY						
H	C	R	W	WB	Z	ZB
✔		✔	✉		✔	

CROSS REFERENCE	
ALCON	PNF4436X508.4
CL BRAKES	4002
FMSI	D345
FMSI	D608
HAWK	HB170 0,65
MINTEX	MDB1456
PAGID	1203
PFC	0345.XX
Raybestos	DR608
SBS	3041
WVA	20877 17,50

FERODO RACING
Updated on November 2020

Available
Out of Range
In Introduction
Exhausting
Make to order

FCP461

WVA No: 20561 15,00


84.9mm = 3.343"

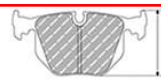
56.8mm = 2.236"


14.7mm = 0.579"


39.0mm = 1.535"

SKODA Front, TATRA Rear, WARTBURG Front

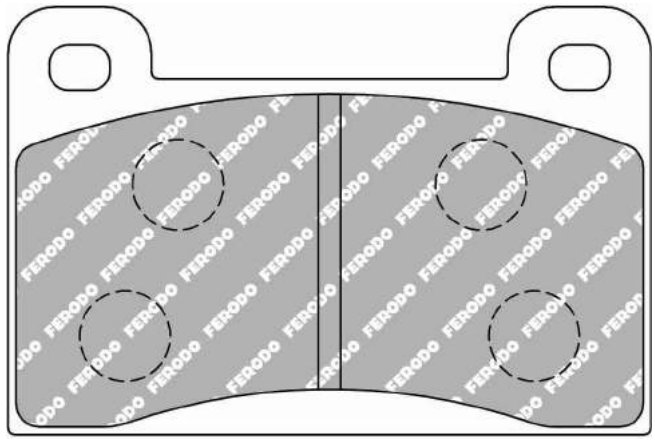

MATERIAL AVAILABILITY						
H	C	R	W	WB	Z	ZB
✔		✔				

CROSS REFERENCE	
MINTEX	MDB1165
PAGID	8067
WVA	20561 15,00

FCP472

WVA No: 21312 12,80


89.2mm = 3.512"

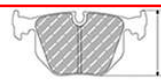
36.0mm = 1.417"


13.1mm = 0.516"


30.1mm = 1.185"

HONDA Rear, MG Rear, ROVER Rear

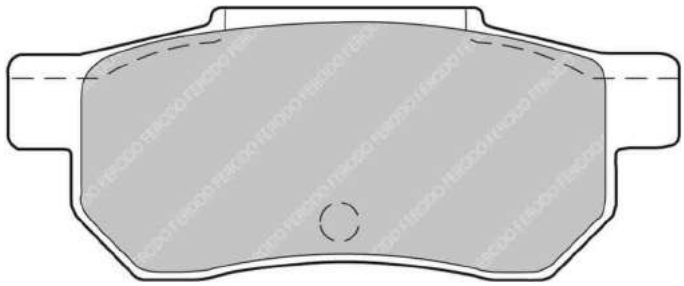

MATERIAL AVAILABILITY						
H	C	R	W	WB	Z	ZB
✔						

CROSS REFERENCE	
MINTEX	MDB1360
MINTEX	MDB2191
WVA	21312 12,80

FCP483

WVA No: 20878 14,80
FMSI No: D331


106.8mm = 4.205"

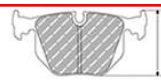
66.5mm = 2.618"


15.1mm = 0.594"


49.5mm = 1.949"

MAZDA Front

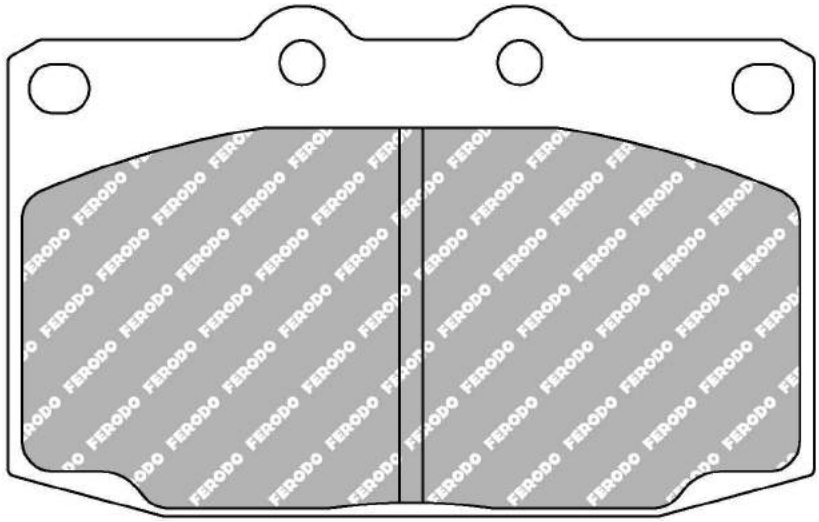

MATERIAL AVAILABILITY						
H	C	R	W	WB	Z	ZB
✔		✔			✉	

CROSS REFERENCE	
FMSI	D331
HAWK	HB155 0,58
MINTEX	MDB1351
MINTEX	MDB1935
PFC	0463
WVA	20878 14,80

FCP484

WVA No: 21121 13,80


85.5mm = 3.366"

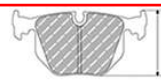
45.0mm = 1.772"


14.2mm = 0.559"


39.6mm = 1.559"

NISSAN Rear

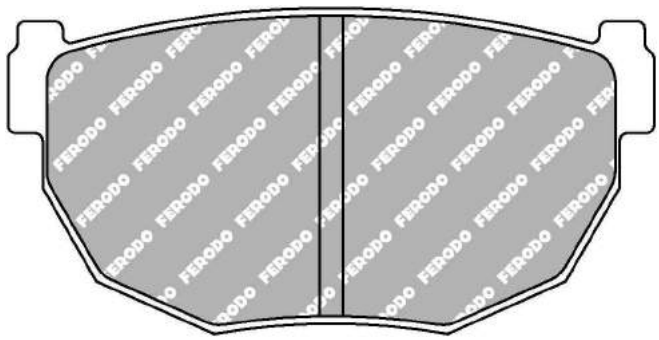

MATERIAL AVAILABILITY						
H	C	R	W	WB	Z	ZB
✔	✖	✖				

CROSS REFERENCE	
MINTEX	MDB1295
PFC	0272
WVA	21121 13,80

FERODO RACING
Updated on November 2020

✔ Available
✖ Out of Range
In Introduction
Exhausting
Make to order

FCP487

WVA No: 21277 15,00
FMSI No: D319


91.7mm = 3.610"

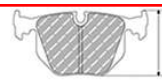
64.5mm = 2.539"


15.0mm = 0.591"


42.8mm = 1.685"

MAZDA Front, SAO Front

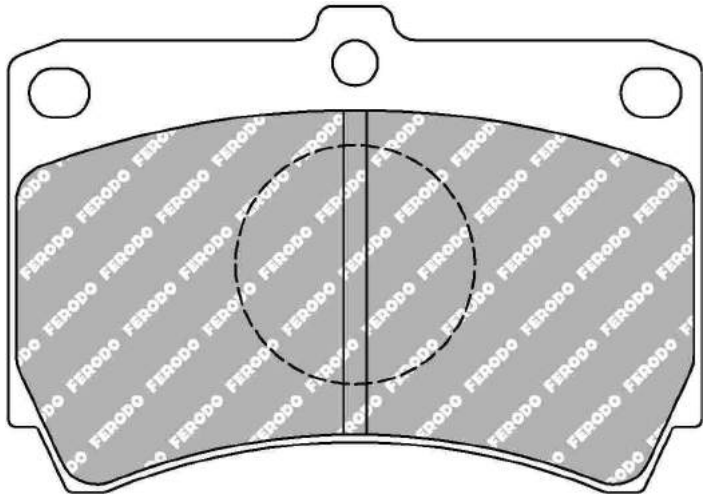

Set supplied without clip

MATERIAL AVAILABILITY						
H	C	R	W	WB	Z	ZB
✔		✉				

CROSS REFERENCE	
FMSI	D319
FMSI	D473
HAWK	HB246 0,567
MINTEX	MDB1348
PFC	0473.XX
WVA	21277 15,00

✔ Available
✖ Out of Range
In Introduction
Exhausting
Make to order

FERODO RACING

Updated on November 2020

FCP519

WVA No: 21193 18,00



151.5mm = 5.965"
151.5mm = 5.965"

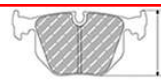

49.3mm = 1.941"
49.3mm = 1.941"



18.0mm = 0.709"
18.0mm = 0.709"



44.1mm = 1.736"
44.1mm = 1.736"

FIAT Front, FIAT AUTO POLAND Front, INNOCENTI Front

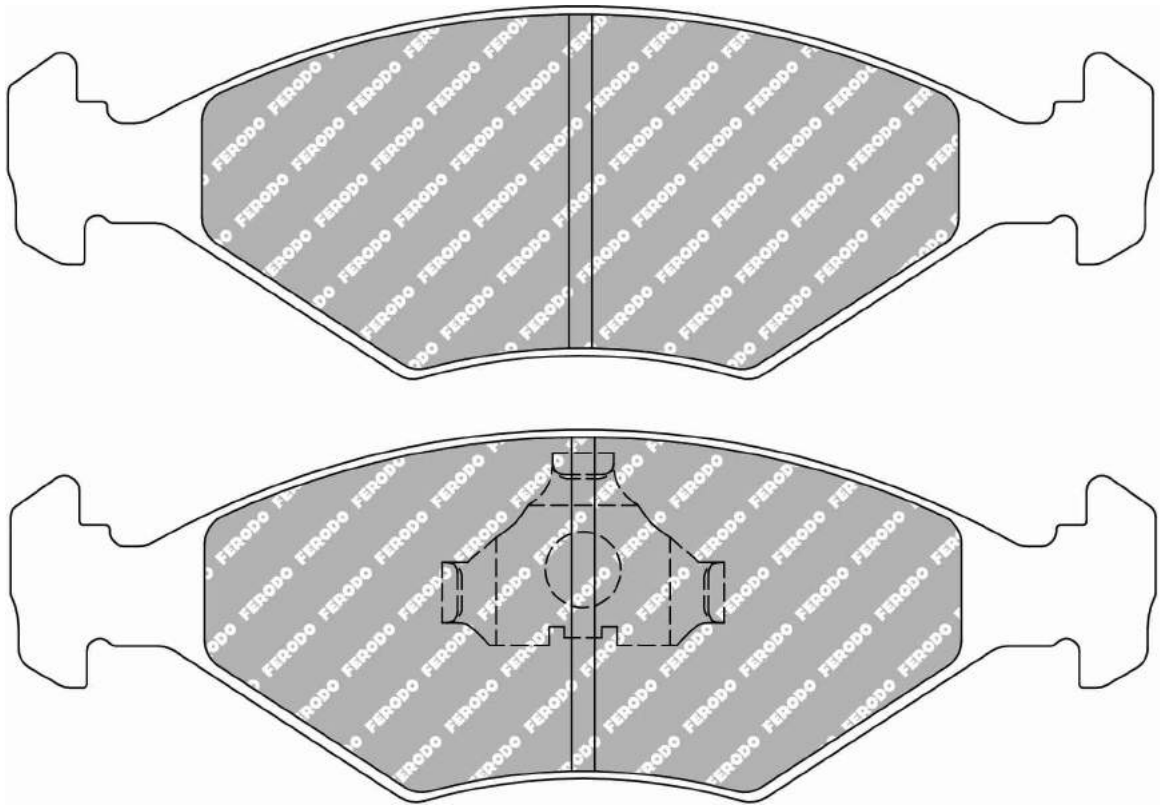

MATERIAL AVAILABILITY						
H	C	R	W	WB	Z	ZB
		✉	✉			

CROSS REFERENCE	
BREMBO	07.8301.14
MINTEX	MDB1513
WVA	21193 18,00

FERODO RACING

Updated on November 2020

Available
Out of Range
In Introduction
Exhausting
Make to order

FCP524

WVA No: 21100 17,00


90.0mm = 3.543"

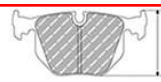
65.0mm = 2.559"


17.0mm = 0.669"


46.3mm = 1.823"

FIAT Front, LANCIA Front, YUGO Front

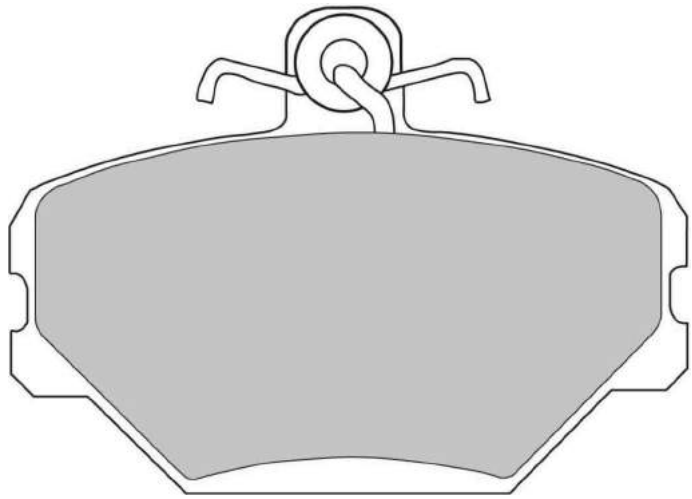

MATERIAL AVAILABILITY						
H	C	R	W	WB	Z	ZB
		✔				

CROSS REFERENCE	
BREMBO	07.8301.15
MINTEX	MDB1384
MINTEX	MDB1606
WVA	21100 17,00

FCP527

WVA No: 21170 17,30


104.5mm = 4.114"

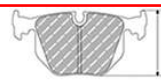
60.0mm = 2.362"


17.7mm = 0.697"


36.0mm = 1.417"

LADA Front

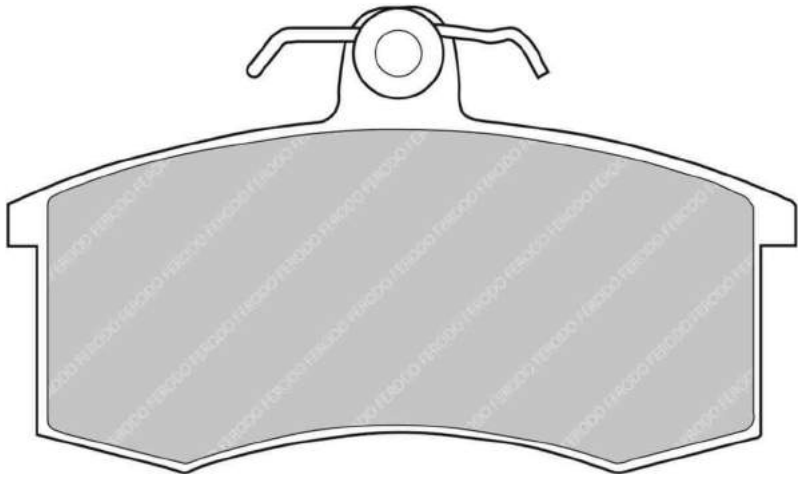

MATERIAL AVAILABILITY						
H	C	R	W	WB	Z	ZB
✔		✔				

CROSS REFERENCE	
MINTEX	MDB1353
WVA	21170 17,30

✔ Available
✖ Out of Range
In Introduction
Exhausting
Make to order

FERODO RACING

Updated on November 2020

FCP535

WVA No: 21179 16,80


72.0mm = 2.835"

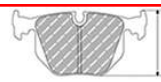
61.0mm = 2.402"


16.5mm = 0.650"


39.5mm = 1.555"

CITROEN Front, PEUGEOT Front

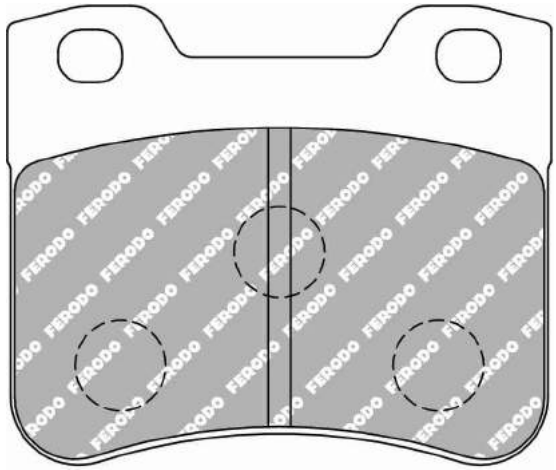

MATERIAL AVAILABILITY						
H	C	R	W	WB	Z	ZB
✔	✖	✔				

CROSS REFERENCE	
BREMBO	07.8301.16
MINTEX	MDB1483
WVA	21179 16,80

FERODO RACING

Updated on November 2020

✔ Available
✖ Out of Range
In Introduction
Exhausting
Make to order

FCP541

WVA No: 20961 15,20
FMSI No: D306


87.4mm = 3.441"

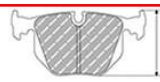
52.9mm = 2.083"


15.0mm = 0.591"


40.8mm = 1.606"

AUDI Rear, CITROEN Rear, FERRARI Front, FORD Rear, HONDA Rear, MERCEDES Rear, PEUGEOT Rear, PORSCHE Rear, RENAULT Rear, SEAT Rear, SKODA Rear, VOLKSWAGEN Rear

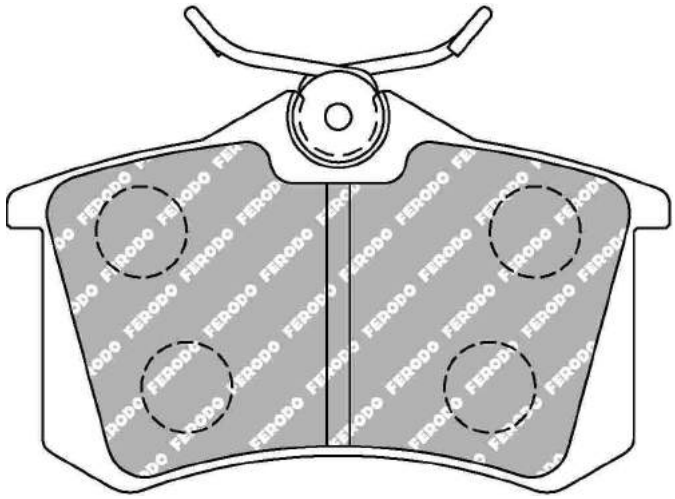

ALSO AVAILABLE		
SHAPE	TH. MM	NOTES
FCP1491	16	

MATERIAL AVAILABILITY						
H	C	R	W	WB	Z	ZB
✔		✔	✉		✔	

CROSS REFERENCE	
BREMBO	07.8301.17
CL BRAKES	4038
EBC	DP680
FMSI	D1017
FMSI	D306
FMSI	D340
FMSI	D608
FMSI	D851
HAWK	HB271 0,635
HAWK	HB364 0,642
MINTEX	MDB1382
OE AUDI	8E0698451L
OE Renault	440600678R
PAGID	1158
Raybestos	DR1017
WVA	20961 15,20

✔ Available
✖ Out of Range
In Introduction
Exhausting
Make to order

FERODO RACING

FCP546

WVA No: 21165 16,50
FMSI No: D454


95.0mm = 3.740"


49.0mm = 1.929"


16.5mm = 0.650"


43.0mm = 1.693"

ALFA ROMEO Front

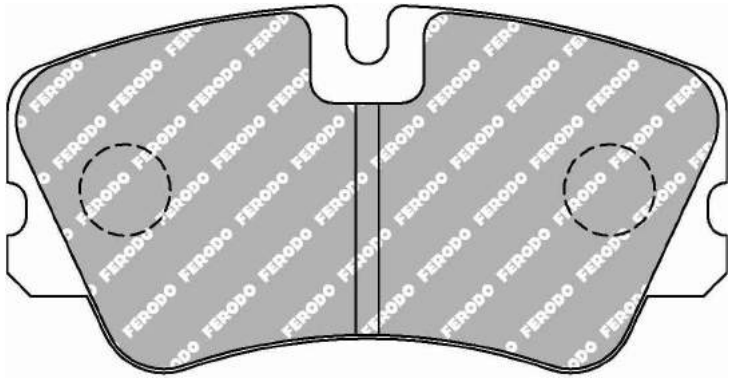

MATERIAL AVAILABILITY						
H	C	R	W	WB	Z	ZB
✔		✔				

CROSS REFERENCE	
FMSI	D454
MINTEX	MDB1403
PAGID	1760
WVA	21165 16,50

FERODO RACING

Updated on November 2020

Available
Out of Range
In Introduction
Exhausting
Make to order

FCP558

WVA No: 20973 11,00
FMSI No: D516


105.2mm = 4.142"

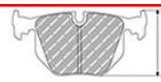
54.8mm = 2.157"


11.0mm = 0.433"


42.0mm = 1.654"

CITROEN Rear, PEUGEOT Rear, RENAULT Rear

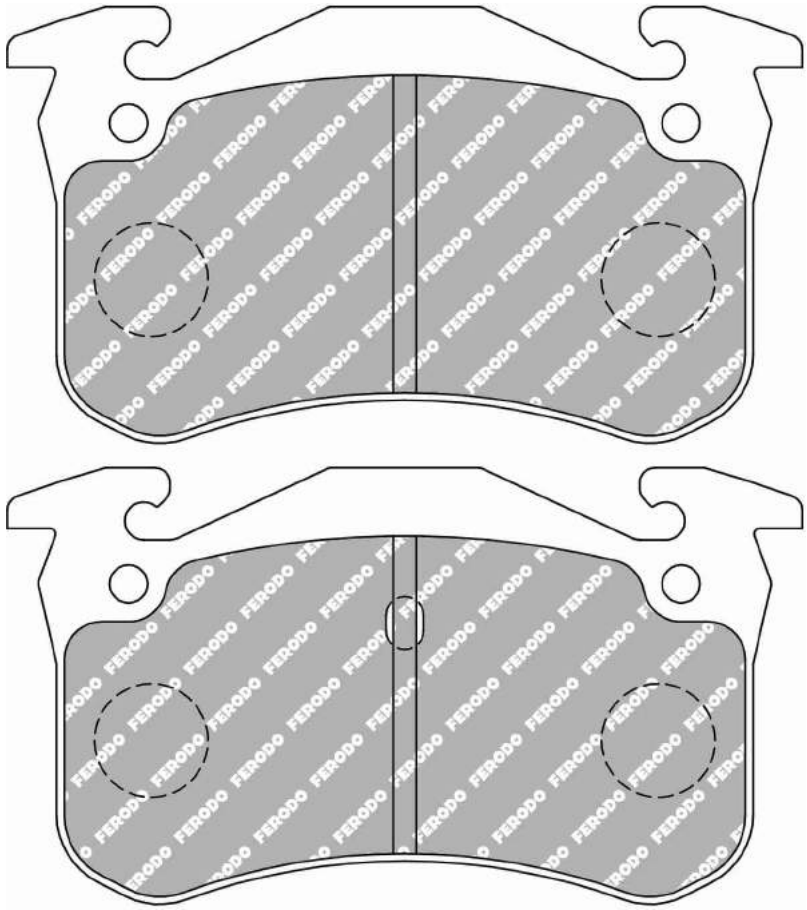

ALSO AVAILABLE		
SHAPE	TH. MM	NOTES
FCP881	15	

MATERIAL AVAILABILITY						
H	C	R	W	WB	Z	ZB
✓	✉	✓				

CROSS REFERENCE	
ALCON	PNF0084X261.4
ALCON	PNF0084X317.4
CL BRAKES	4034
FMSI	D516
MINTEX	MDB1339
MINTEX	MDB2555
MINTEX	MDB2868
PAGID	1610
WVA	20973 11,00

✓ Available
✗ Out of Range
In Introduction
Exhausting
Make to order

FERODO RACING

Updated on November 2020

FCP560

WVA No: 20953 17,50
FMSI No: D372


131.9mm = 5.193"

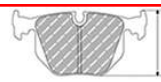
71.0mm = 2.795"


18.0mm = 0.709"


50.9mm = 2.004"

AUDI Front, PORSCHE Front / Rear

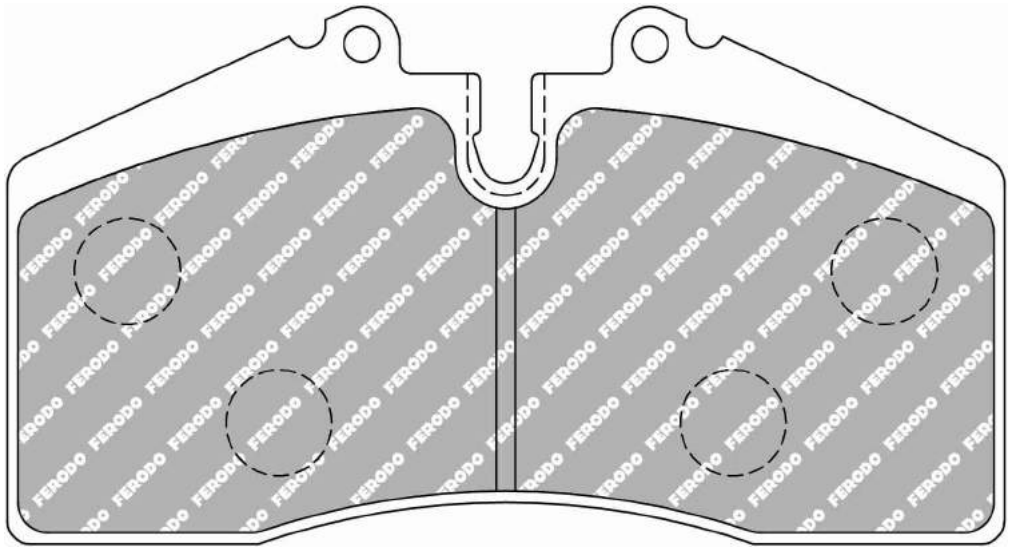

MATERIAL AVAILABILITY						
H	C	R	W	WB	Z	ZB
✔		✔	✉			

CROSS REFERENCE	
CL BRAKES	4001
FMSI	D372
FMSI	D447
FMSI	D609
HAWK	HB141 0,65
MINTEX	MDB1457
PAGID	1204
PFC	0447
Raybestos	DR609
SBS	3045
WVA	20953 17,50

FERODO RACING
Updated on November 2020

✔ Available
✖ Out of Range
In Introduction
Exhausting
Make to order

FCP565

WVA No: 21074 19,00
FMSI No: D590


130.0mm = 5.118"

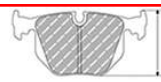
59.0mm = 2.323"


19.1mm = 0.752"


53.5mm = 2.106"

ALFA ROMEO Front, CITROEN Front, FIAT Front, LANCIA Front, PEUGEOT Front, RENAULT Front, RENAULT-ALPINE Front

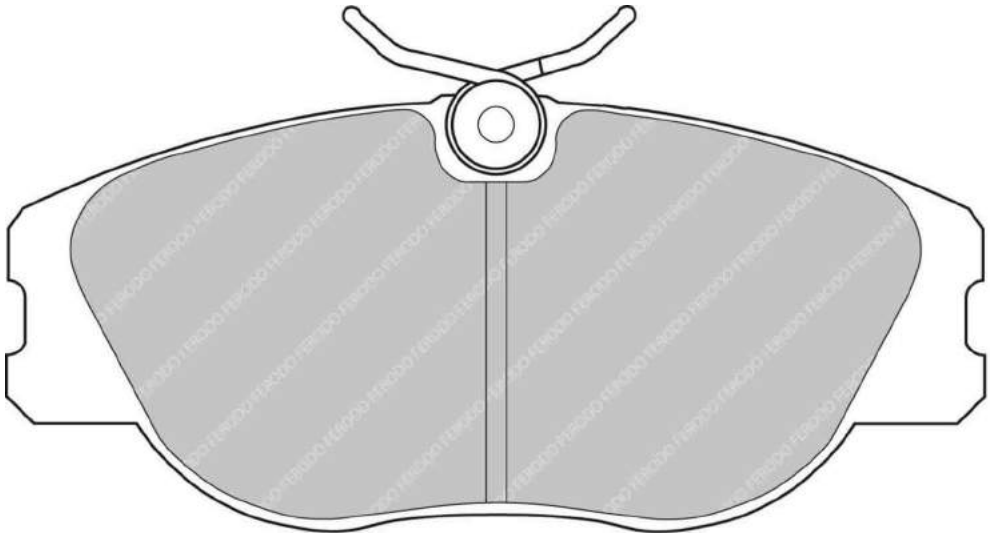

MATERIAL AVAILABILITY						
H	C	R	W	WB	Z	ZB
✔		✔	✔			

CROSS REFERENCE	
BREMBO	07.8301.18
CL BRAKES	4027
FMSI	D590
MINTEX	MDB1391
MINTEX	MDB1518
PAGID	1702
PFC	0590
WVA	21074 19,00

✔ Available
✖ Out of Range
In Introduction
Exhausting
Make to order

FERODO RACING

Updated on November 2020

FCP578

WVA No: 20995 17,30
FMSI No: D396


123.3mm = 4.854"

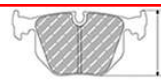
45.0mm = 1.772"


15.9mm = 0.626"


39.7mm = 1.563"

BMW Rear, JAGUAR Rear

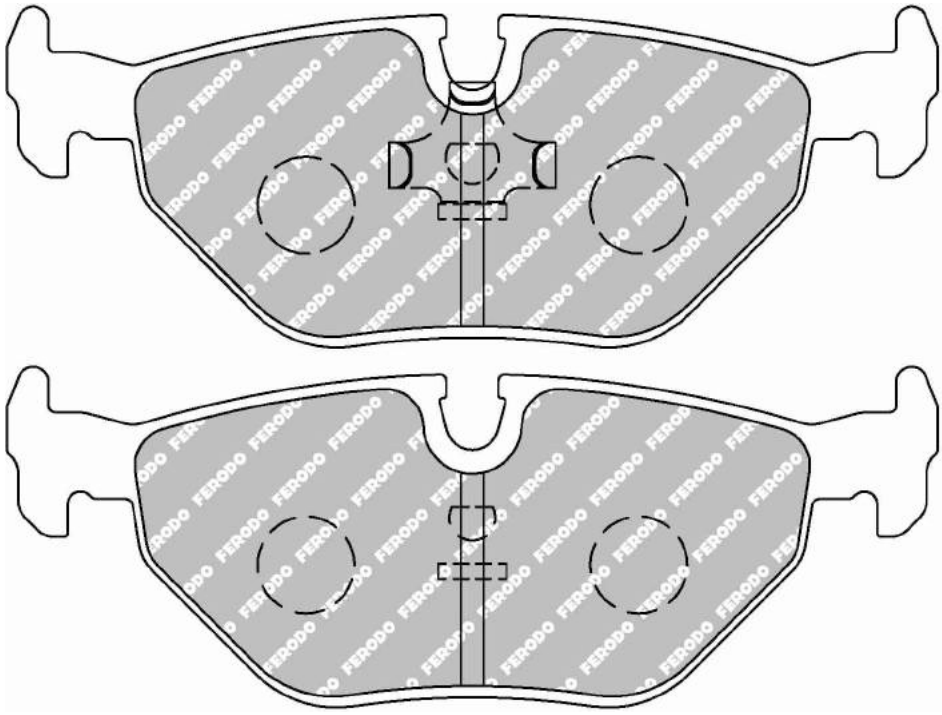

MATERIAL AVAILABILITY						
H	C	R	W	WB	Z	ZB
✔		✔	✉			

CROSS REFERENCE	
FMSI	D396
HAWK	HB227 0,63
MINTEX	MDB1369
PAGID	1285
PFC	0396.XX
WVA	20995 17,30

FERODO RACING
Updated on November 2020

✔ Available
✖ Out of Range
In Introduction
Exhausting
Make to order

FCP584

WVA No: 21190 17,50
FMSI No: D403



DAEWOO Front, OPEL Front, VAUXHALL Front

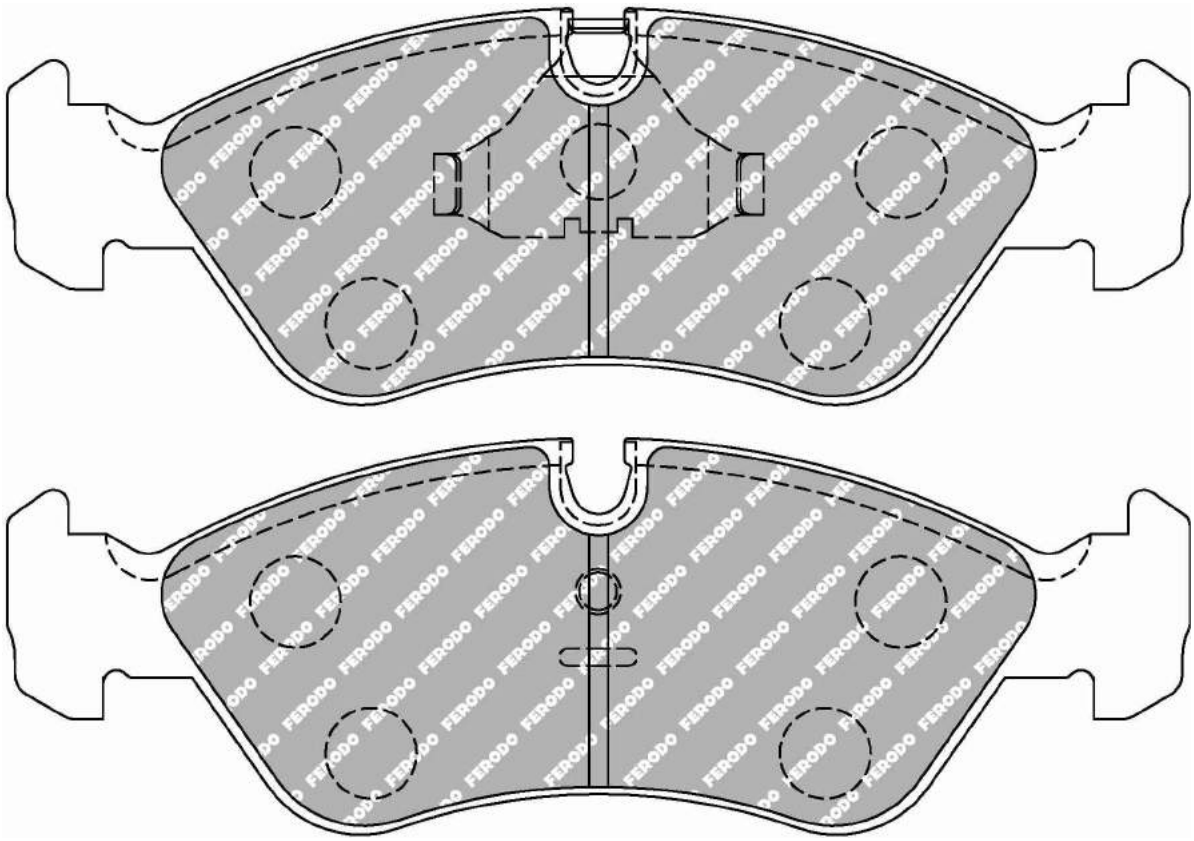

MATERIAL AVAILABILITY						
H	C	R	W	WB	Z	ZB
✔		✔				

CROSS REFERENCE	
BREMBO	07.8301.19
CL BRAKES	4036
FMSI	D403
MINTEX	MDB1386
PAGID	1288
WVA	21190 17,50
WVA	21201-21190 17,50

FCP586

WVA No: 21140 15,70
FMSI No: D427


61.8mm = 2.433"

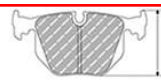
58.0mm = 2.283"


15.5mm = 0.610"


37.4mm = 1.472"

OPEL Rear, SAAB Rear, VAUXHALL Rear

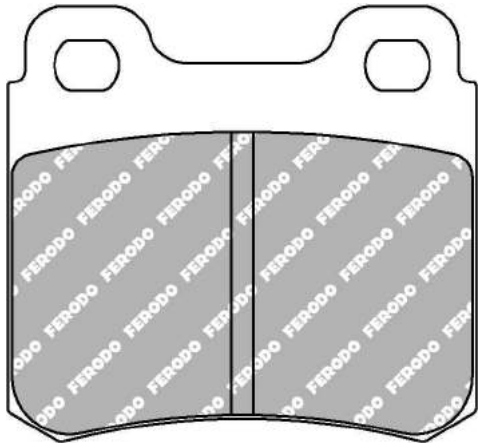

MATERIAL AVAILABILITY						
H	C	R	W	WB	Z	ZB
✔		✔				

CROSS REFERENCE	
CL BRAKES	4037
FMSI	D427
MINTEX	MDB1385
PAGID	1177
PAGID	1177
WVA	21140 15,70

FERODO RACING

Updated on November 2020

✔ Available
✖ Out of Range
In Introduction
Exhausting
Make to order

FCP590

WVA No: 20676 19,50 - 21624&21625 19,50
FMSI No: D555


156.5mm = 6.161"

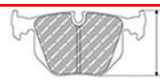
75.0mm = 2.953"


19.5mm = 0.768"

61.0mm = 2.402"



AUDI Front, FORD Front, SEAT Front, SKODA Front, VOLKSWAGEN Front

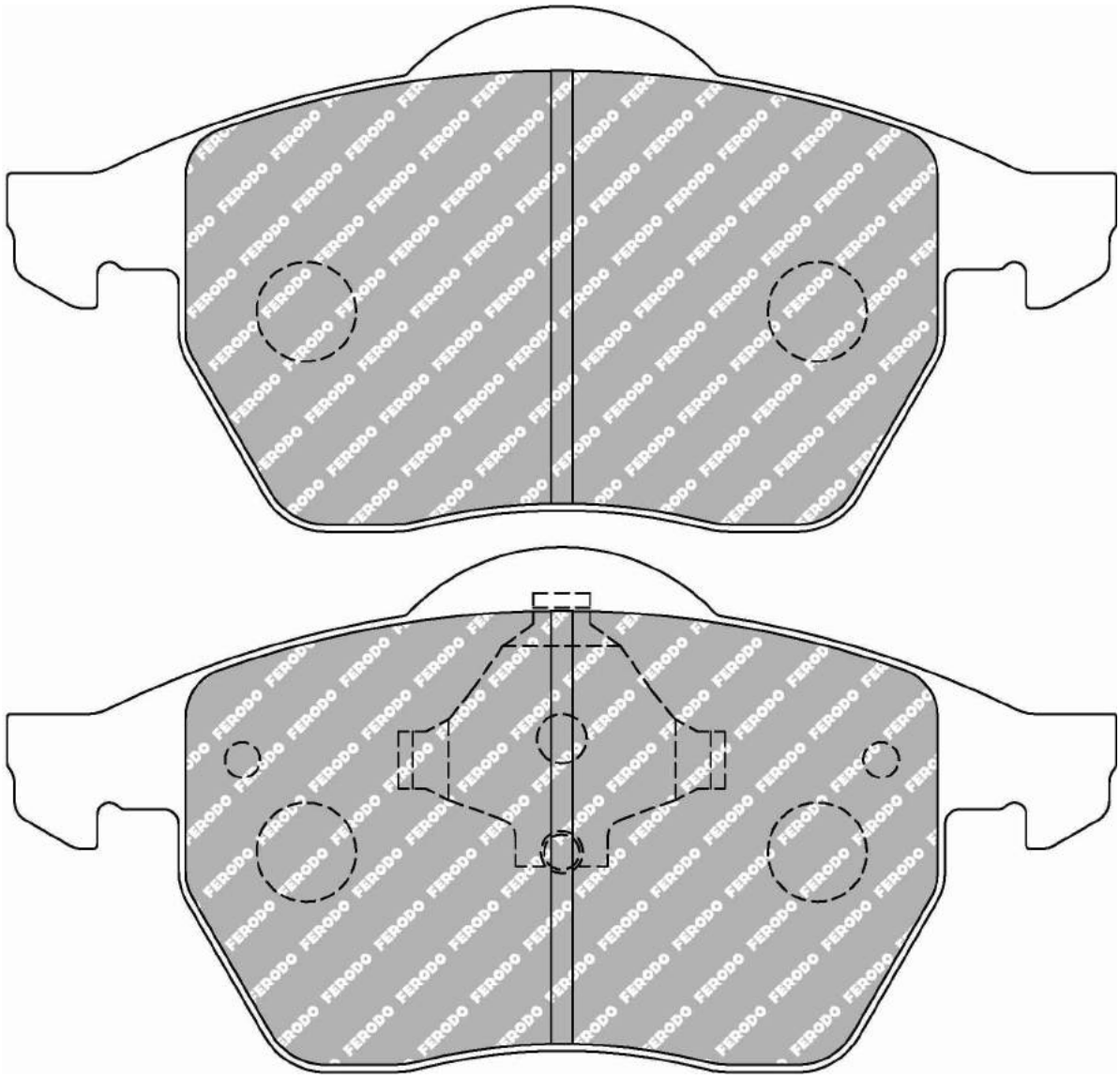

MATERIAL AVAILABILITY						
H	C	R	W	WB	Z	ZB
✔		✔	✉			

CROSS REFERENCE	
BREMBO	07.8300.14
BREMBO	07.8300.38
BREMBO	07.8300.40
BREMBO	07.8301.73
FMSI	D555
FMSI	D687
HAWK	HB269 .763A
MINTEX	MDB1531
PAGID	1678
WVA	20676 19,50 - 21624&21625 19,50

✔ Available
✖ Out of Range
In Introduction
Exhausting
Make to order

FERODO RACING

Updated on November 2020

FCP596

WVA No: 21144 16,50
FMSI No: D228


88.0mm = 3.465"

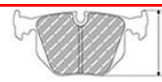
68.0mm = 2.677"


16.6mm = 0.654"


41.0mm = 1.614"

ALFA ROMEO Rear, AUDI Rear, FIAT Rear, LANCIA Rear, VOLKSWAGEN Rear

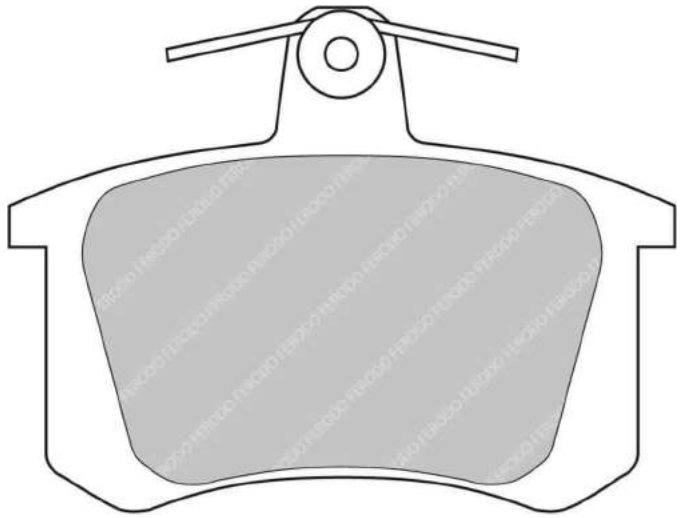

MATERIAL AVAILABILITY						
H	C	R	W	WB	Z	ZB
✔		✔				

CROSS REFERENCE	
BREMBO	07.8301.21
CL BRAKES	4010
FMSI	D228
HAWK	HB271 0,635
MINTEX	MDB1191
PAGID	3242
WVA	21144 16,50

FERODO RACING
Updated on November 2020

Available
Out of Range
In Introduction
Exhausting
Make to order

FCP598

WVA No: 21322 15,00
FMSI No: D373


132.0mm = 5.197"

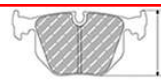
50.0mm = 1.969"


14.8mm = 0.583"


45.0mm = 1.772"

HONDA Front

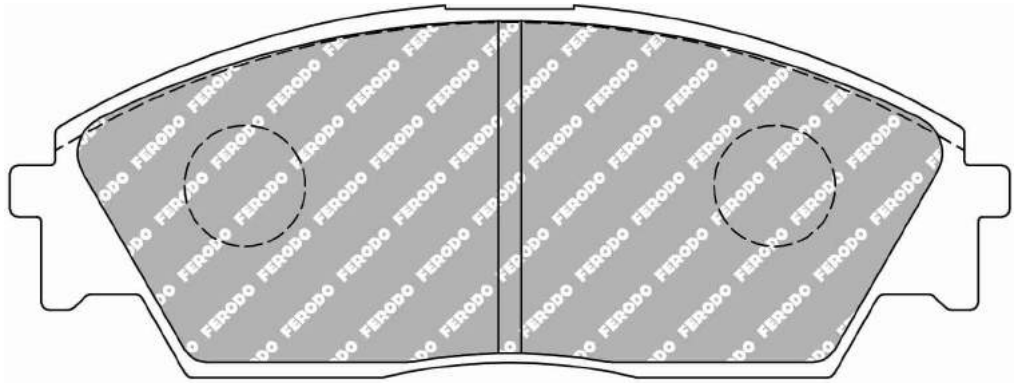

MATERIAL AVAILABILITY						
H	C	R	W	WB	Z	ZB
✔		✔				

CROSS REFERENCE	
BREMBO	07.8301.22
CL BRAKES	4083
FMSI	D373
HAWK	HB113 0,59
MINTEX	MDB1374
MINTEX	MDB1525
PAGID	8010
PFC	0373.XX
WVA	21322 15,00

FCP600

WVA No: 21526 17,00
FMSI No: D449


135.0mm = 5.315"

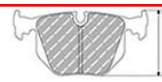
54.0mm = 2.126"


16.8mm = 0.661"


46.1mm = 1.815"

DAEWOO Front, HYUNDAI Front, INFINITI Front, NISSAN Front, SSANGYONG Front

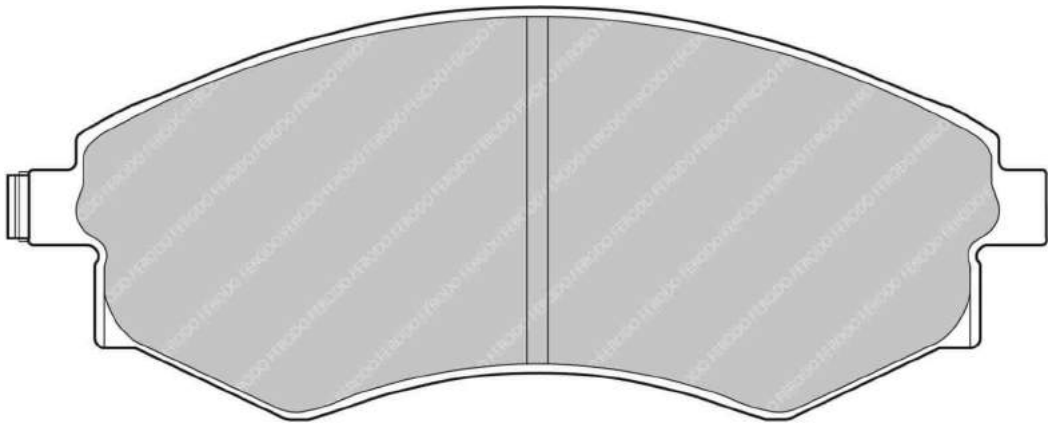

MATERIAL AVAILABILITY						
H	C	R	W	WB	Z	ZB
✔		✖				

CROSS REFERENCE	
BREMBO	07.8301.23
FMSI	D449
FMSI	D462
FMSI	D485
FMSI	D700
HAWK	HB235 0,665
HAWK	HB261 0,665
MINTEX	MDB1488
MINTEX	MDB2351
WVA	21526 17,00

FCP602

WVA No: 21294 15,00


120.2mm = 4.732"

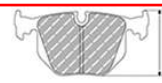
54.0mm = 2.126"


15.1mm = 0.594"


49.3mm = 1.941"

TOYOTA Front

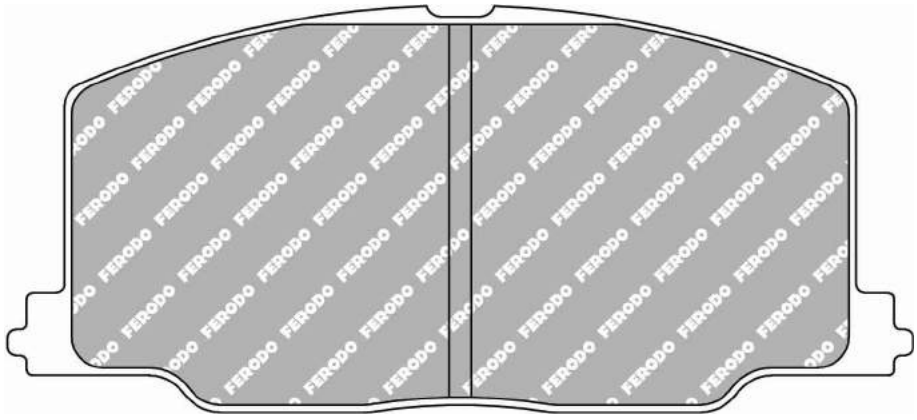

MATERIAL AVAILABILITY						
H	C	R	W	WB	Z	ZB
✔		✉				

CROSS REFERENCE	
BREMBO	07.8301.24
MINTEX	MDB1400
WVA	21294 15,00

FERODO RACING

Updated on November 2020

✔ Available
✖ Out of Range
In Introduction
Exhausting
Make to order

FCP613

WVA No: 21515 17,50


129.3mm = 5.091"

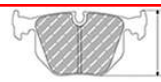
69.2mm = 2.724"


17.3mm = 0.681"


48.0mm = 1.890"

HONDA Front, LAND ROVER Front, MG Front, ROVER Front

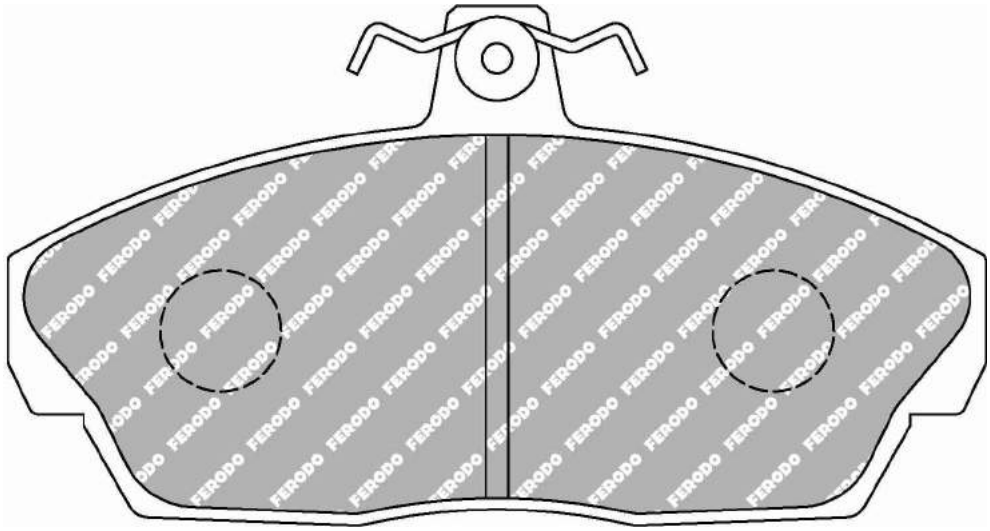

MATERIAL AVAILABILITY						
H	C	R	W	WB	Z	ZB
✔		✔				

CROSS REFERENCE	
BREMBO	07.8301.25
MINTEX	MDB1659
MINTEX	MDB1972
WVA	21515 17,50

FCP617

WVA No: 21171 19,00


131.0mm = 5.157"

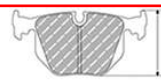
58.0mm = 2.283"


18.0mm = 0.709"


37.9mm = 1.492"

FORD Front

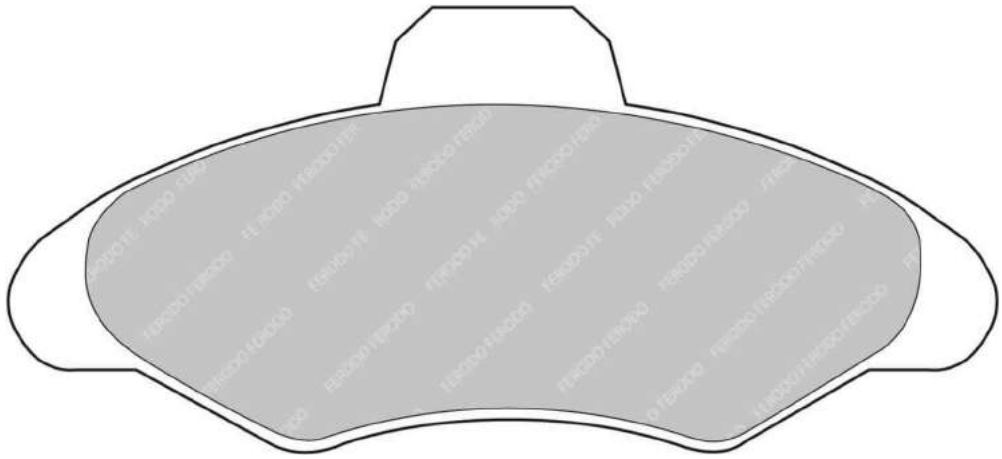

MATERIAL AVAILABILITY						
H	C	R	W	WB	Z	ZB
✔						

CROSS REFERENCE	
BREMBO	07.8301.26
MINTEX	MDB1493
WVA	21171 19,00

FCP638

WVA No: 21553 14,00
FMSI No: D272


85.5mm = 3.366"

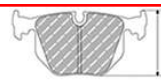
46.0mm = 1.811"


15.0mm = 0.591"


36.5mm = 1.437"

HYUNDAI Rear

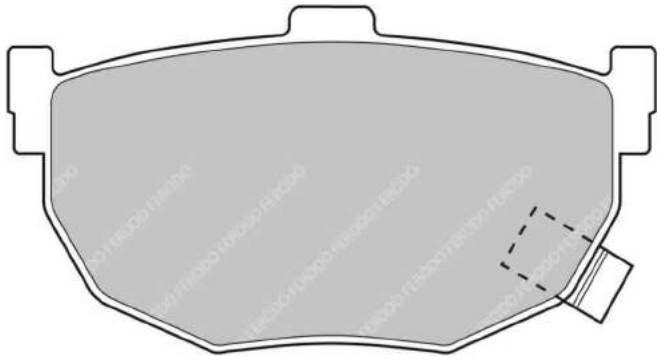

MATERIAL AVAILABILITY						
H	C	R	W	WB	Z	ZB
✔						

CROSS REFERENCE	
FMSI	D272
FMSI	D323
FMSI	D464
HAWK	HB262 0,54
MINTEX	MDB2352
WVA	21553 14,00

FCP646

WVA No: 21153 17,50


99.9mm = 3.933"

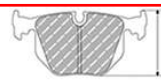
74.0mm = 2.913"


18.2mm = 0.717"


56.0mm = 2.205"

MERCEDES Front

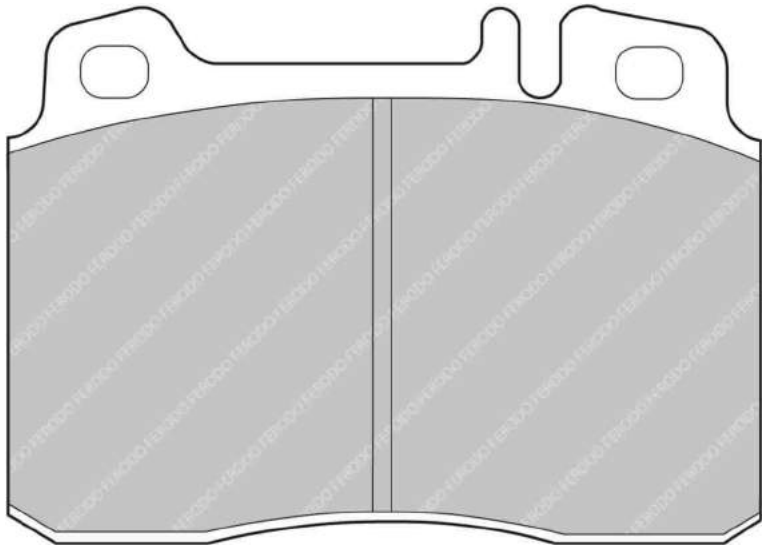

MATERIAL AVAILABILITY						
H	C	R	W	WB	Z	ZB
✔			✉			

CROSS REFERENCE	
MINTEX	MDB1503
WVA	21153 17,50

FERODO RACING
Updated on November 2020

Available
Out of Range
In Introduction
Exhausting
Make to order

FCP647

WVA No: 21271 17,00


95.0mm = 3.740"

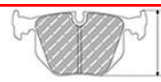
63.0mm = 2.480"


17.0mm = 0.669"


42.0mm = 1.654"

ALFA ROMEO Front

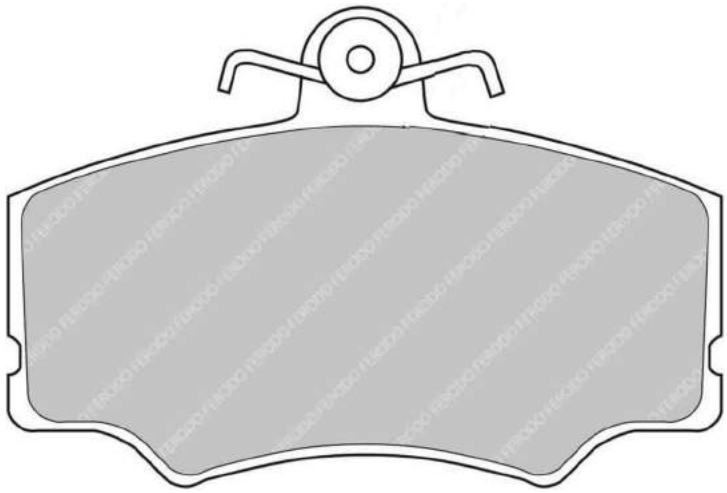

MATERIAL AVAILABILITY						
H	C	R	W	WB	Z	ZB
✉						

CROSS REFERENCE	
MINTEX	MDB1511
WVA	21271 17,00

FCP653

WVA No: 21552 14,00
FMSI No: D525


110.1mm = 4.335"

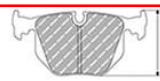
46.2mm = 1.819"


14.0mm = 0.551"

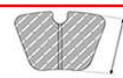
42.9mm = 1.689"

MAZDA Front

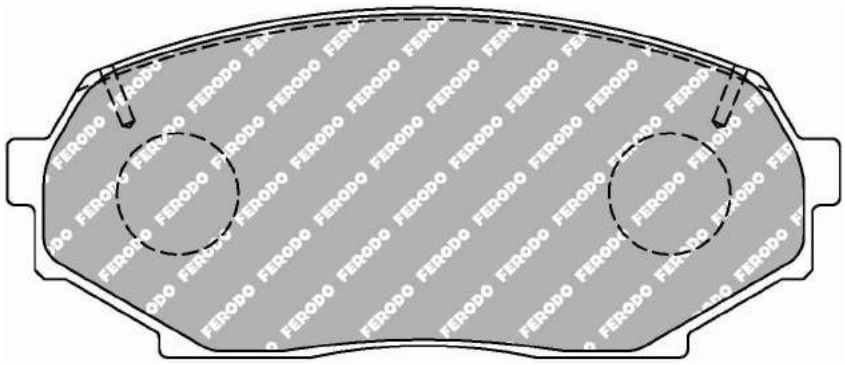

MATERIAL AVAILABILITY						
H	C	R	W	WB	Z	ZB
			✉			

CROSS REFERENCE	
FMSI	D525
HAWK	HB148
MINTEX	MDB1413
OE MAZDA	NAY03323ZA
Raybestos	DR525
WVA	21552 14,00

FCP660

WVA No: 21173 17,00


94.8mm = 3.732"

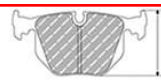
55.0mm = 2.165"


17.0mm = 0.669"


46.5mm = 1.831"

BMW Front, MERCEDES Front, SAAB Front

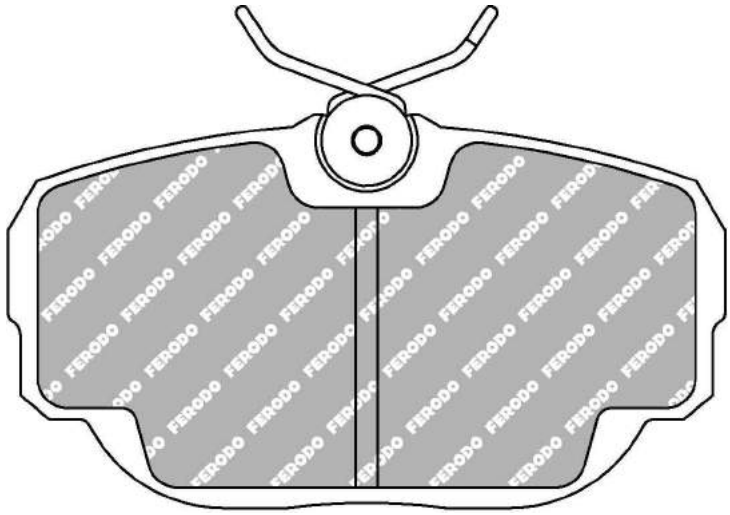

Replacing FCP303

MATERIAL AVAILABILITY						
H	C	R	W	WB	Z	ZB
✔		✔	✉			

CROSS REFERENCE	
MINTEX	MDB1401
MINTEX	MDB1473
MINTEX	MDB1583
PAGID	1544
WVA	21173 17,00

FERODO RACING

Updated on November 2020

✔ Available
✖ Out of Range
In Introduction
Exhausting
Make to order

FCP685

WVA No: 21560 18,00


156.5mm = 6.161"

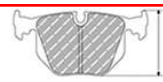
60.0mm = 2.362"


18.0mm = 0.709"


53.5mm = 2.106"

FORD Front, JAGUAR Front, OPEL Front, SAAB Front, VAUXHALL Front

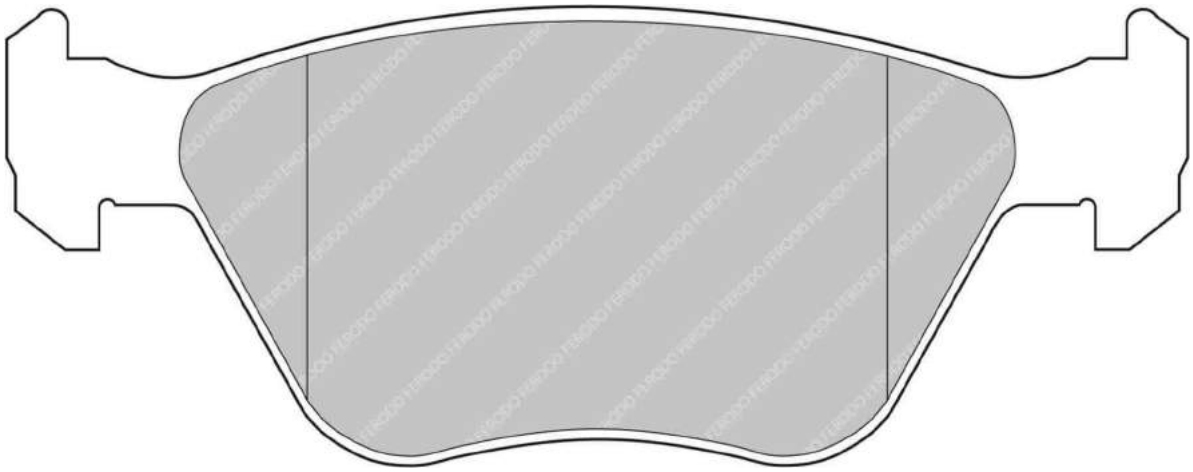

MATERIAL AVAILABILITY						
H	C	R	W	WB	Z	ZB
✔		✔				

CROSS REFERENCE	
ALCON	PNF0084X235
ALCON	PNF0084X235.4
BREMBO	07.8301.28
MINTEX	MDB1637
PAGID	1675
PFC	0394
PFC	7760
WVA	21560 18,00

FCP691

WVA No: 21561 17,00

FMSI No: D430


137.5mm = 5.413"

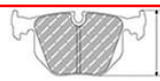
51.0mm = 2.008"


16.8mm = 0.661"

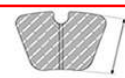
49.5mm = 1.949"

INFINITI Front, NISSAN Front

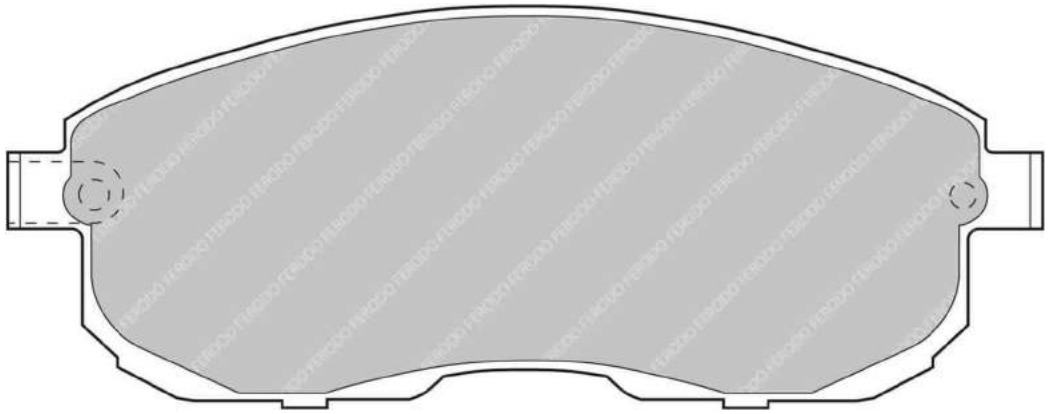

MATERIAL AVAILABILITY						
H	C	R	W	WB	Z	ZB
✔						

CROSS REFERENCE	
BREMBO	07.8300.07
FMSI	D430
HAWK	HB268 0,665
MINTEX	MDB1451
WVA	21561 17,00

✔ Available
✖ Out of Range
In Introduction
Exhausting
Make to order

FERODO RACING

Updated on November 2020

FCP721

WVA No: 21381 16,80
FMSI No: D1053

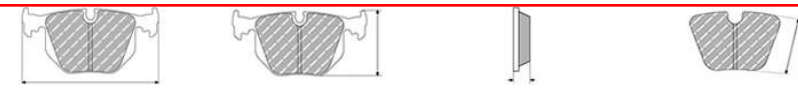

ALFA ROMEO Front, CHEVROLET Rear, DODGE Front, FIAT Front, LANCIA Front

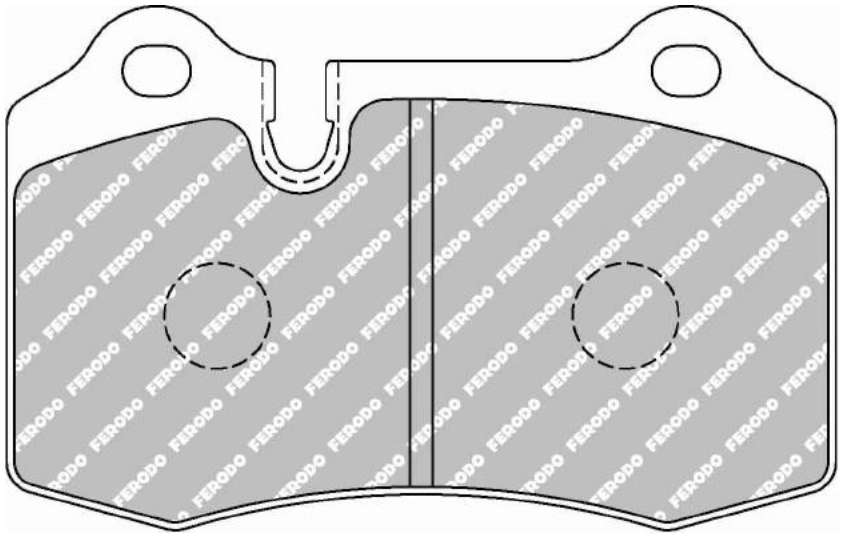

ALSO AVAILABLE		
SHAPE	TH. MM	NOTES
FCP1348	15	
FRP3109	12.5	

MATERIAL AVAILABILITY						
H	C	R	W	WB	Z	ZB
✔		✔	✉			

CROSS REFERENCE	
BREMBO	07.7235.60
CL BRAKES	4022
FMSI	D1053
FMSI	D592
HAWK	HB194 0,57
HAWK	HB194 0,575
HAWK	HB194 0,665
MINTEX	MDB1633
MINTEX	MDB1877
PFC	0592.XX.17
WVA	21381 16,80

FERODO RACING

Updated on November 2020

✔ Available
✖ Out of Range
In Introduction
Exhausting
Make to order

FCP725

WVA No: 21292 17,30
FMSI No: D558


151.5mm = 5.965"

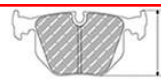
57.0mm = 2.244"


16.4mm = 0.646"


52.0mm = 2.047"

BMW Front

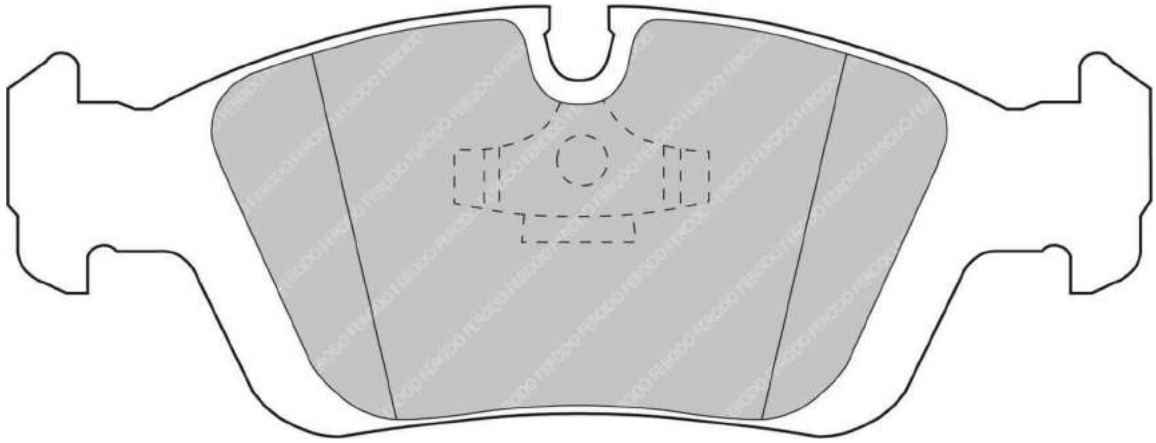

MATERIAL AVAILABILITY						
H	C	R	W	WB	Z	ZB
✔		✔	✔			

CROSS REFERENCE	
BREMBO	07.8300.09
BREMBO	07.8301.68
FMSI	D558
HAWK	HB136 0,69
MINTEX	MDB1065
MINTEX	MDB1538
PAGID	2180
PFC	0558
PFC	0558.XX
WVA	21292 17,30

✔ Available
✖ Out of Range
In Introduction
Exhausting
Make to order

FERODO RACING

Updated on November 2020

FCP726

WVA No: 21589 15,00
FMSI No: D340


88.0mm = 3.465"

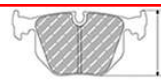
53.0mm = 2.087"


14.4mm = 0.567"


41.0mm = 1.614"

LANCIA Rear

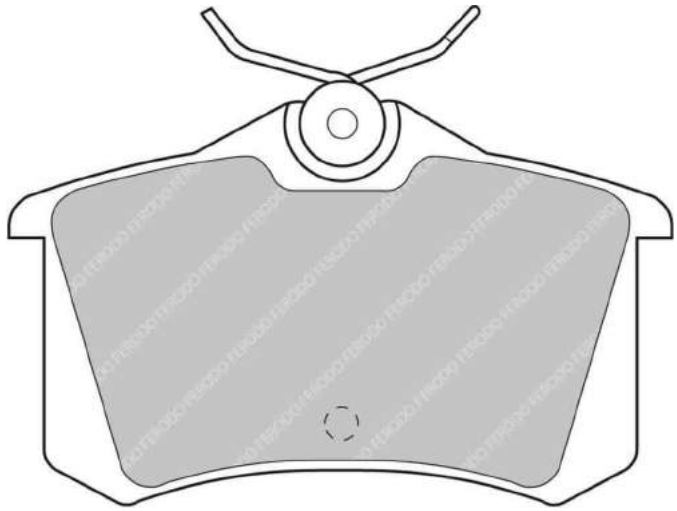

MATERIAL AVAILABILITY						
H	C	R	W	WB	Z	ZB
✔		✔				

CROSS REFERENCE	
CL BRAKES	4038
FMSI	D340
WVA	21589 15,00

FERODO RACING
Updated on November 2020

✔ Available
✖ Out of Range
In Introduction
Exhausting
Make to order

FCP732

WVA No: 20547 16,80



141.4mm = 5.567"
141.4mm = 5.567"

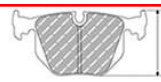

49.0mm = 1.929"
59.0mm = 2.323"



16.0mm = 0.630"
16.0mm = 0.630"



44.6mm = 1.756"
44.6mm = 1.756"

ASTON MARTIN Rear, DAEWOO Front, OPEL Front, VAUXHALL Front

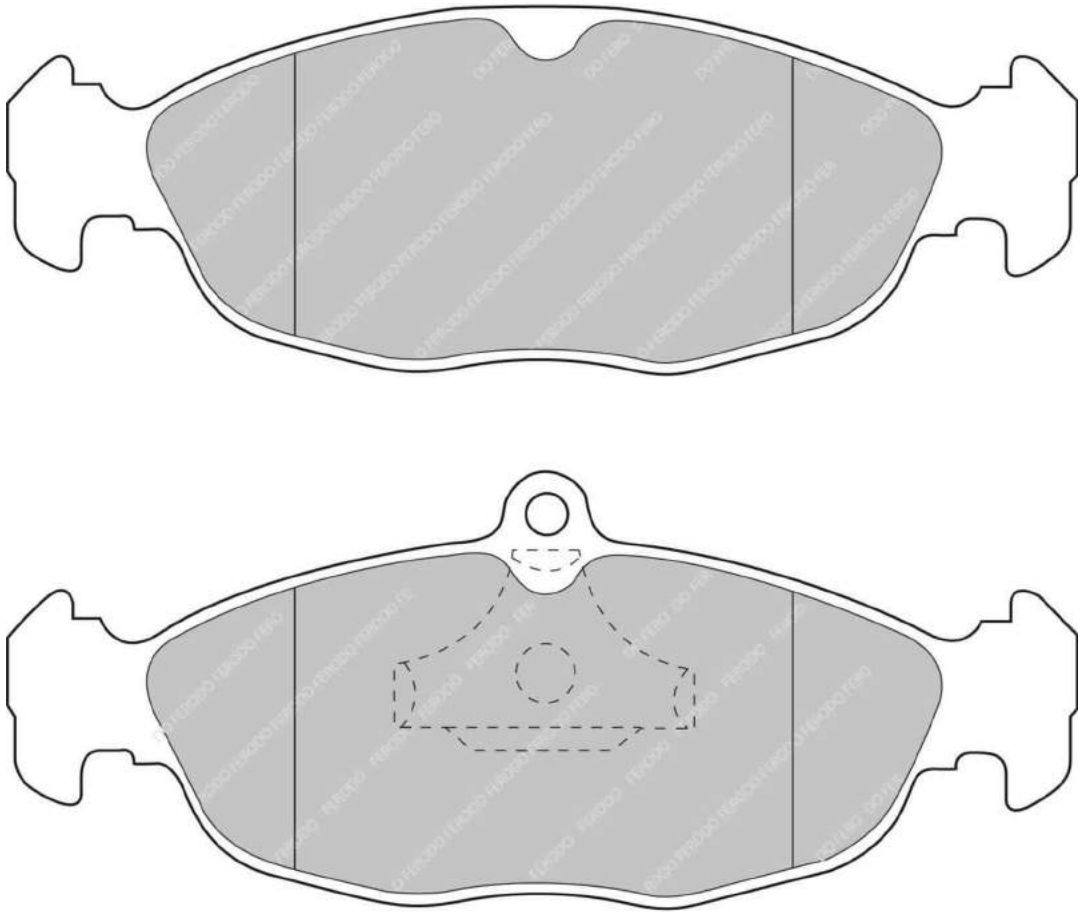

MATERIAL AVAILABILITY						
H	C	R	W	WB	Z	ZB
✔		✔				

CROSS REFERENCE	
BREMBO	07.8301.29
MINTEX	MDB1556
WVA	20547 16,80

✔ Available
✖ Out of Range
In Introduction
Exhausting
Make to order

FERODO RACING

Updated on November 2020

FCP748

WVA No: 21446 17,80
FMSI No: D341


129.0mm = 5.079"

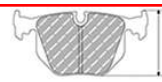
52.0mm = 2.047"


17.9mm = 0.705"


49.0mm = 1.929"

ACURA Front, HONDA Front

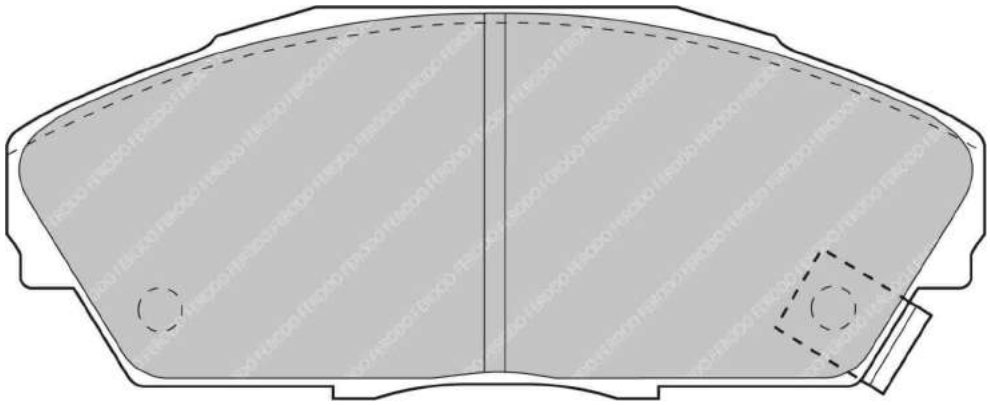

MATERIAL AVAILABILITY						
H	C	R	W	WB	Z	ZB
✔						

CROSS REFERENCE	
BREMBO	07.8300.17
BREMBO	07.8300.23
FMSI	D341
FMSI	D409
HAWK	HB242 0,661
MINTEX	MDB1589
PAGID	1596
PFC	0409.XX
WVA	21446 17,80

FCP761

FMSI No: D465


137.9mm = 5.429"

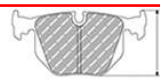
52.0mm = 2.047"


18.5mm = 0.728"


45.1mm = 1.776"

ACURA Front, HONDA Front

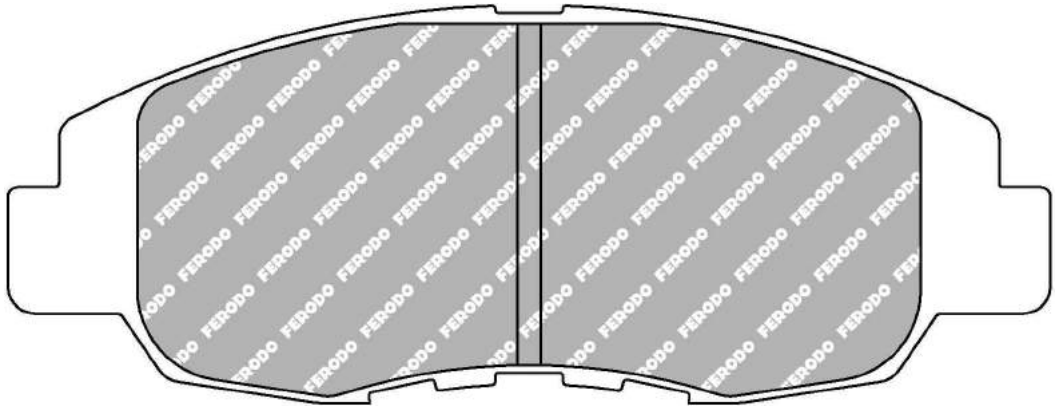

MATERIAL AVAILABILITY						
H	C	R	W	WB	Z	ZB
✉						

CROSS REFERENCE	
BREMBO	07.8300.18
CL BRAKES	4102
FMSI	D465
FMSI	D764
HAWK	HB275 0,62
MINTEX	MDB1533
PFC	0465.XX

FERODO RACING
Updated on November 2020

Available
Out of Range
In Introduction
Exhausting
Make to order

FCP765

WVA No: 21363 15,70
FMSI No: D530


149.8mm = 5.898"

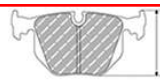
58.6mm = 2.307"


15.7mm = 0.618"


46.5mm = 1.831"

DODGE Front, MITSUBISHI Front

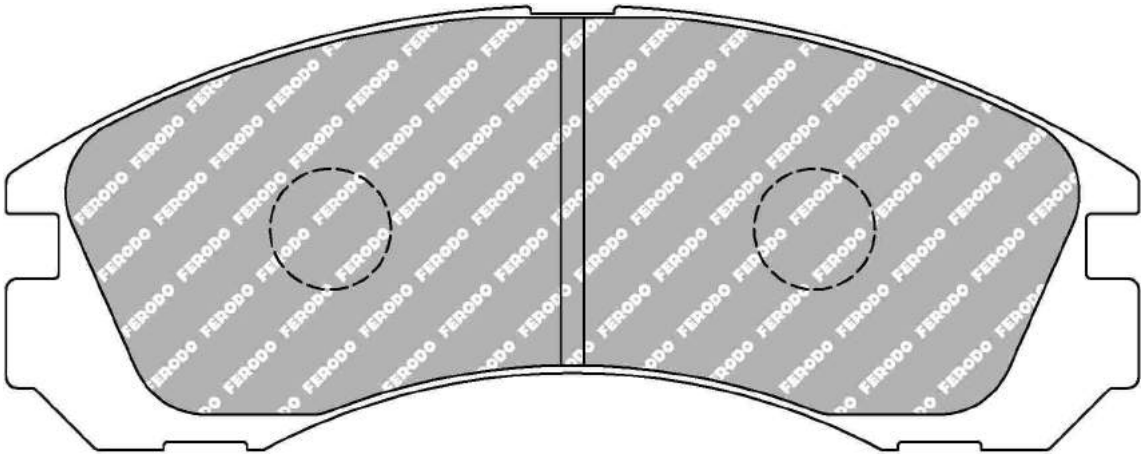

MATERIAL AVAILABILITY						
H	C	R	W	WB	Z	ZB
✔		✔	✔		✔	

CROSS REFERENCE	
FMSI	D530
FMSI	D723
HAWK	HB214 0,618
MINTEX	MDB1539
OE Mitsubishi	4605A492
PAGID	1591
PFC	0530.XX
WVA	21363 15,70

FCP766

WVA No: 21395 18,00
FMSI No: D648


156.5mm = 6.161"
155.3mm = 6.114"

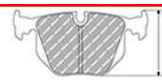
58.6mm = 2.307"
58.6mm = 2.307"


18.0mm = 0.709"
18.0mm = 0.709"


47.5mm = 1.870"
47.5mm = 1.870"

FORD Front

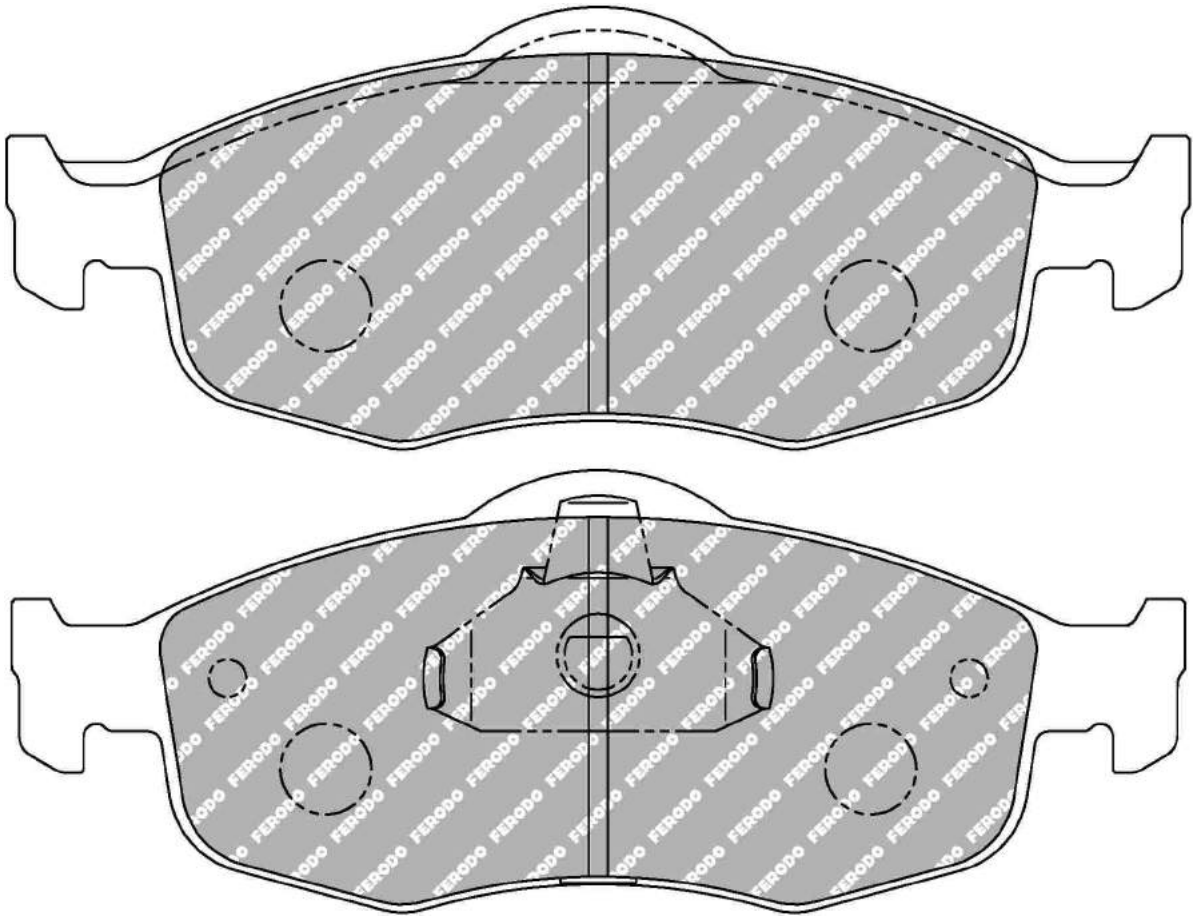

MATERIAL AVAILABILITY						
H	C	R	W	WB	Z	ZB
✖		✉				

CROSS REFERENCE	
BREMBO	07.8301.30
FMSI	D648
HAWK	HB420 0,748
MINTEX	MDB1622
PFC	0648.XX
WVA	21395 18,00

FERODO RACING
Updated on November 2020

Available
Out of Range
In Introduction
Exhausting
Make to order

FCP774

WVA No: 20168 16,20
FMSI No: D227


119.0mm = 4.685"

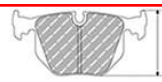
70.0mm = 2.756"


16.2mm = 0.638"


47.5mm = 1.870"

AUDI Front, SEAT Front, VOLKSWAGEN Front

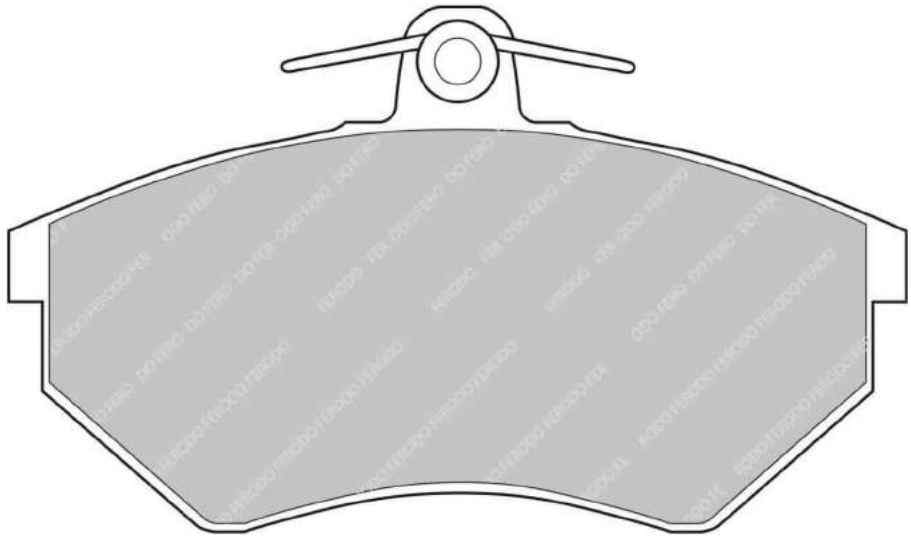

ALSO AVAILABLE		
SHAPE	TH. MM	NOTES
FCP775	19.6	

MATERIAL AVAILABILITY						
H	C	R	W	WB	Z	ZB
✔	✖	✔				

CROSS REFERENCE	
BREMBO	07.8301.32
BREMBO	07.8301.71
CL BRAKES	4011
FMSI	D227
FMSI	D696
HAWK	HB190 .600A
MINTEX	MDB1253
MINTEX	MDB1371
MINTEX	MDB1570
PAGID	1743
WVA	20168 16,20

✔ Available
✖ Out of Range
In Introduction
Exhausting
Make to order

FERODO RACING

Updated on November 2020

FCP775

WVA No: 20168 19,60
FMSI No: D227


119.0mm = 4.685"

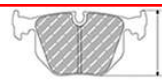
70.0mm = 2.756"


19.6mm = 0.772"


47.5mm = 1.870"

AUDI Front, SEAT Front, VOLKSWAGEN Front

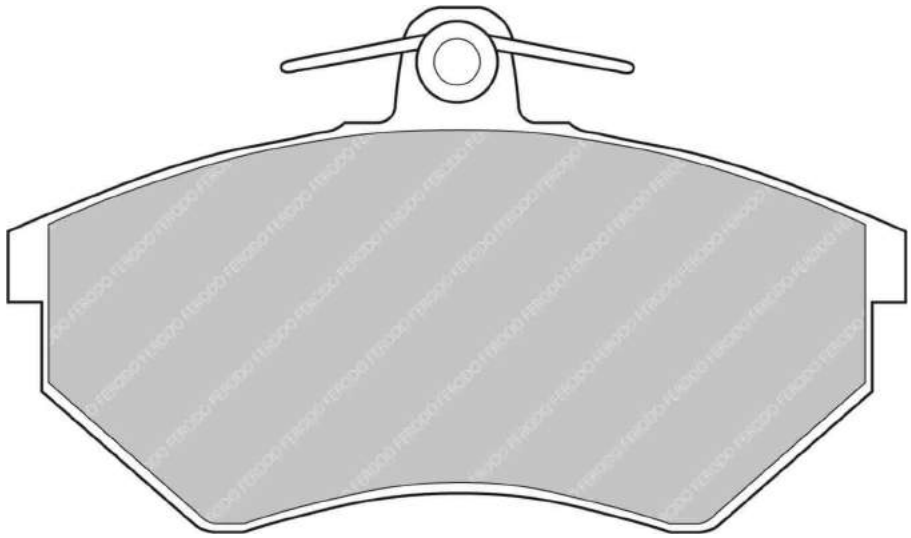

ALSO AVAILABLE		
SHAPE	TH. MM	NOTES
FCP774	16.2	

MATERIAL AVAILABILITY						
H	C	R	W	WB	Z	ZB
✔		✔				

CROSS REFERENCE	
BREMBO	07.8300.02
BREMBO	07.8301.63
CL BRAKES	4011
FMSI	D227
FMSI	D290
FMSI	D684
HAWK	HB190 .730A
MINTEX	MDB1190
MINTEX	MDB1571
PAGID	1744
WVA	20168 19,60

FERODO RACING

Updated on November 2020

Available
Out of Range
In Introduction
Exhausting
Make to order

FCP776

WVA No: 21694 16,50
FMSI No: D621


136.5mm = 5.374"

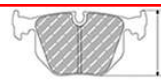
58.0mm = 2.283"


16.5mm = 0.650"


50.1mm = 1.972"

AUDI Front, HONDA Front

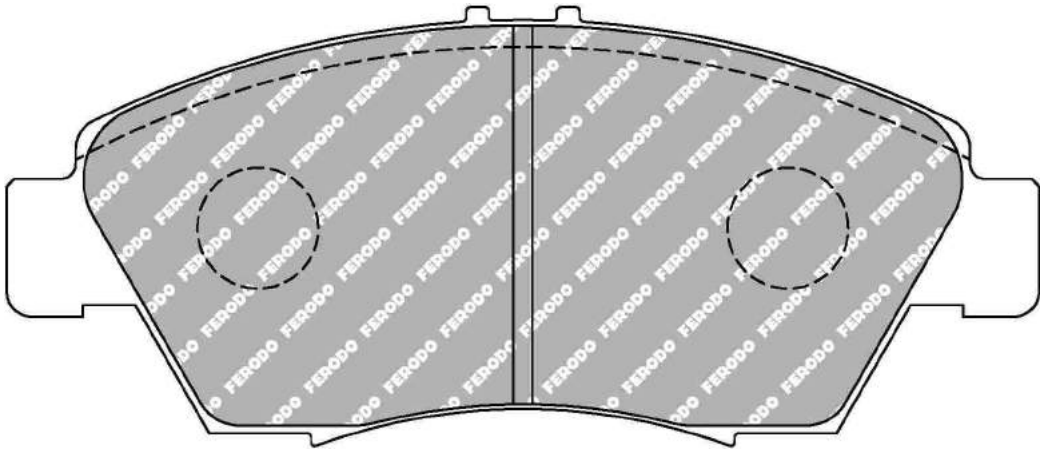

MATERIAL AVAILABILITY						
H	C	R	W	WB	Z	ZB
✔		✔			✉	

CROSS REFERENCE	
BREMBO	07.8300.01
FMSI	D621
MINTEX	MDB1610
PFC	0621
WVA	21694 16,50

FCP777

WVA No: 21697 15,80
FMSI No: D568


131.4mm = 5.173"

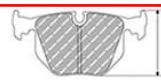
53.0mm = 2.087"


15.0mm = 0.591"


45.5mm = 1.791"

HONDA Front

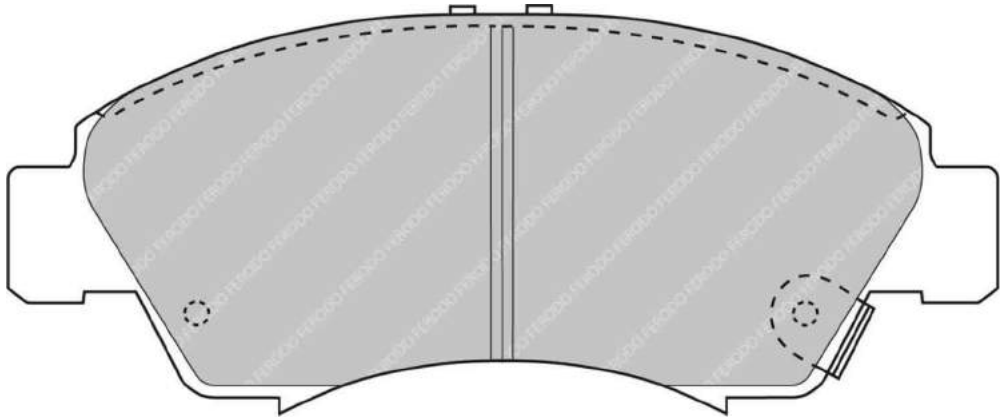

MATERIAL AVAILABILITY						
H	C	R	W	WB	Z	ZB
✔						

CROSS REFERENCE	
BREMBO	07.8301.33
CL BRAKES	4077
FMSI	D568
MINTEX	MDB1615
WVA	21697 15,80

FCP779

WVA No: 20968 20,30
FMSI No: D394


156.5mm = 6.161"
156.5mm = 6.161"

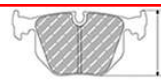
64.4mm = 2.535"
64.4mm = 2.535"


20.5mm = 0.807"
20.5mm = 0.807"


58.6mm = 2.307"
58.6mm = 2.307"

BMW Front

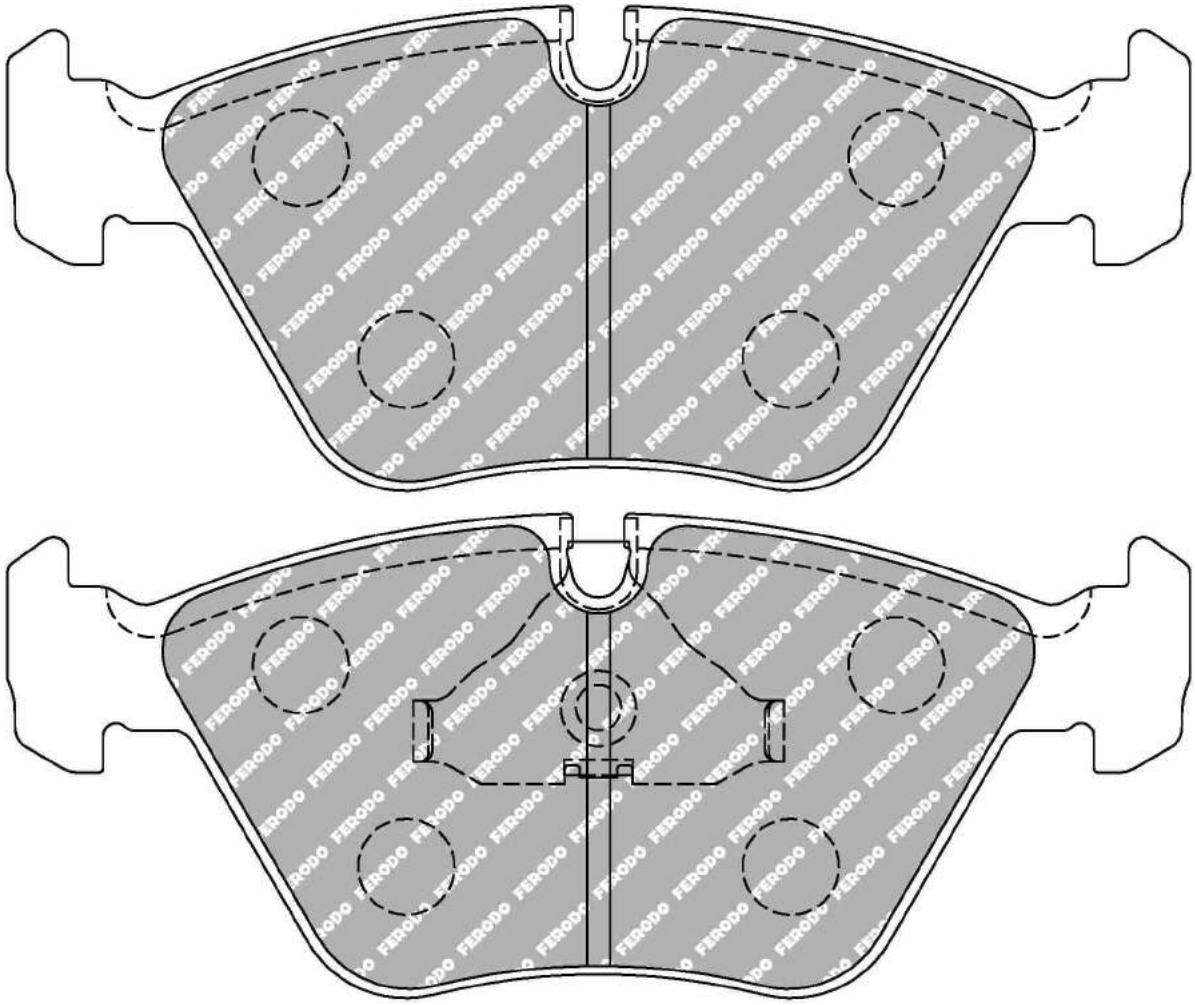

MATERIAL AVAILABILITY						
H	C	R	W	WB	Z	ZB
✔		✔	✉			

CROSS REFERENCE	
BREMBO	07.8300.10
BREMBO	07.8301.50
CL BRAKES	4033
FMSI	D394
FMSI	D725
HAWK	HB135 0,77
MINTEX	MDB1393
PAGID	1295
PFC	0394.XX
Raybestos	DR394
WVA	20968 20,30

FERODO RACING
Updated on November 2020

✔ Available
✖ Out of Range
In Introduction
Exhausting
Make to order

FCP789

WVA No: 21495 17,00
FMSI No: D470


128.1mm = 5.043"

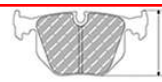
53.0mm = 2.087"


16.1mm = 0.634"


43.7mm = 1.720"

SUBARU Front

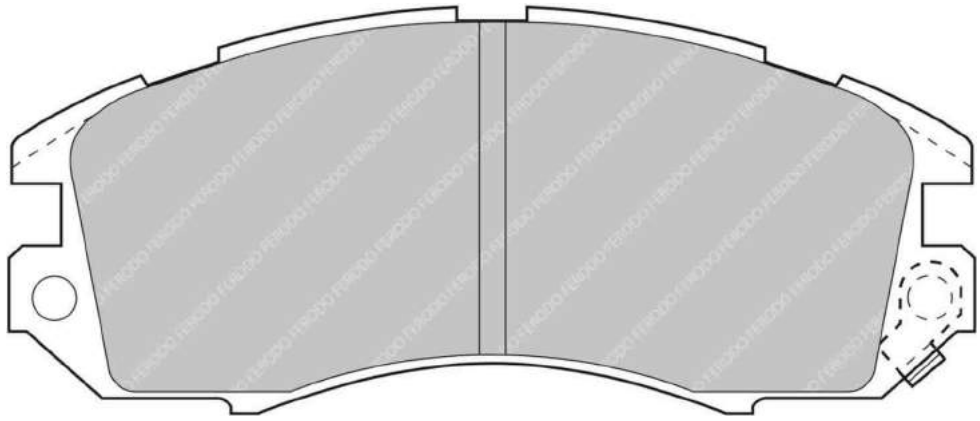

MATERIAL AVAILABILITY						
H	C	R	W	WB	Z	ZB
✔		✔				

CROSS REFERENCE	
BREMBO	07.8301.34
CL BRAKES	4018
FMSI	D470
HAWK	HB408 0,665
MINTEX	MDB1496
PAGID	1349
WVA	21495 17,00

FCP790

WVA No: 21703 14,80
FMSI No: D471


108.1mm = 4.256"

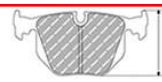
38.0mm = 1.496"


14.6mm = 0.575"


33.1mm = 1.303"

SUBARU Rear

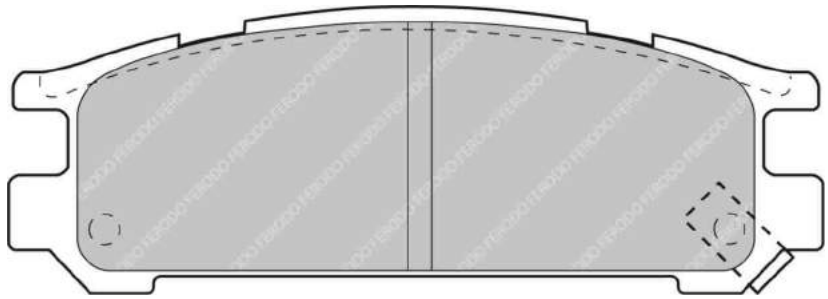

MATERIAL AVAILABILITY						
H	C	R	W	WB	Z	ZB
✔		✔				

CROSS REFERENCE	
CL BRAKES	4019
FMSI	D471
HAWK	HB367 0,585
MINTEX	MDB1497
WVA	21703 14,80

FCP809

WVA No: 20088 14,40
FMSI No: D044


63.4mm = 2.496"

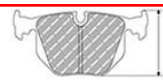
55.0mm = 2.165"


14.4mm = 0.567"


42.5mm = 1.673"

CATERHAM Front, CITROEN Rear, FORD Front, GINETTA Front, INNOCENTI Front, LAMBORGHINI Rear, LANCIA Rear, LOTUS Front, MORGAN Front, PEUGEOT Rear, PIPER Front / Rear, ROVER Front, TALBOT Front, VOLVO Rear

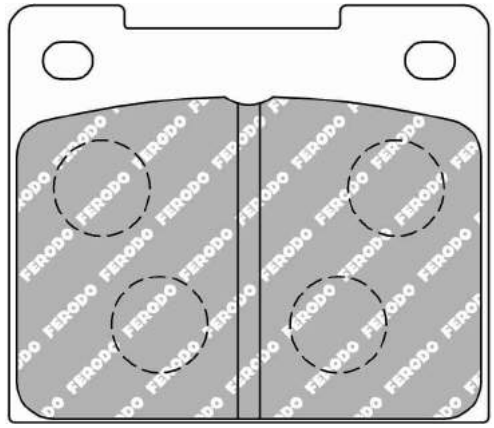

MATERIAL AVAILABILITY						
H	C	R	W	WB	Z	ZB
✓	✓	✓	✉		✓	

CROSS REFERENCE	
ALCON	PNF3451X521.4
ALCON	PNF3451X555.4
CL BRAKES	5002W43T14
EBC	DP114
FMSI	D044
FMSI	D44
HAWK	HB118 0,56
MINTEX	MDB1723
MINTEX	MGB533
PAGID	3102
PFC	0044
Raybestos	DR44
Wilwood	D44
WVA	20088 14,40

FERODO RACING

Updated on November 2020

Available
Out of Range
In Introduction
Exhausting
Make to order

FCP810

WVA No: 20089 14,40
FMSI No: D51


63.4mm = 2.496"

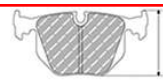
63.2mm = 2.488"


14.4mm = 0.567"


47.8mm = 1.882"

CITROEN Rear, FORD Front, HYUNDAI Front, JENSEN Front, ROVER Front, TALBOT Front, VAUXHALL Front, VOLVO Front

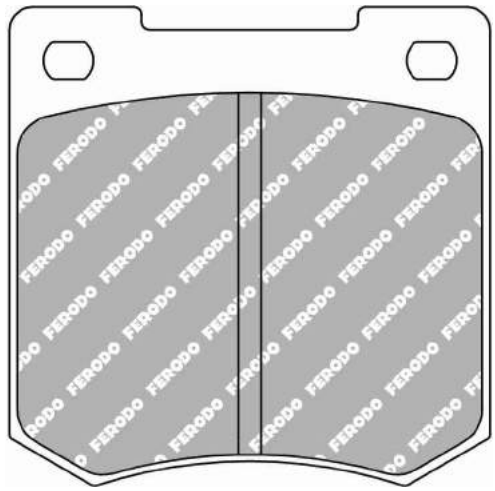

MATERIAL AVAILABILITY						
H	C	R	W	WB	Z	ZB
✔	✉	✔	✉		✉	

CROSS REFERENCE	
ALCON	PNF3451X522
ALCON	PNF3451X522.4
ALCON	PNF3451X554.4
ALCON	PNF3451X566.4
CL BRAKES	5002W48T14
FMSI	D51
MINTEX	MGB535
PAGID	3190
PFC	0051
WVA	20089 14,40

✔ Available
✖ Out of Range
In Introduction
Exhausting
Make to order

FERODO RACING

Updated on November 2020

FCP815

WVA No: 20007 15,30
FMSI No: D009


80.9mm = 3.185"

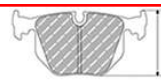
65.0mm = 2.559"


15.2mm = 0.598"


44.4mm = 1.748"

AC Rear, ASTON MARTIN Rear, BRISTOL Rear, FERRARI Rear, JAGUAR Rear, JENSEN Rear, MORGAN Rear, ROVER Rear, TRIUMPH Rear

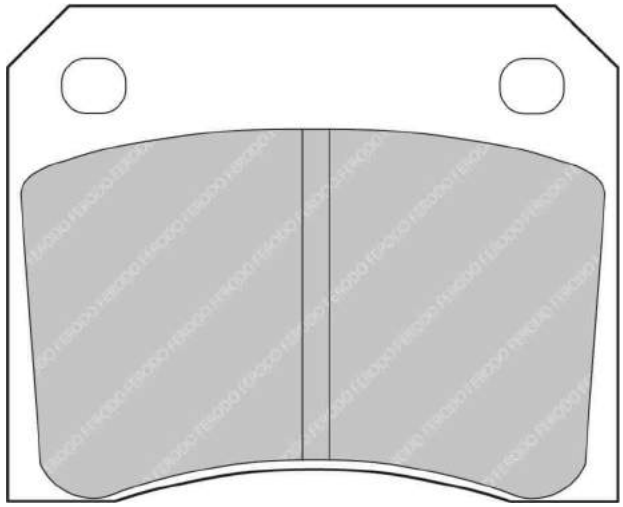

MATERIAL AVAILABILITY						
H	C	R	W	WB	Z	ZB
✔	✉	✔	✉			

CROSS REFERENCE	
FMSI	D009
MINTEX	MGB521
PAGID	8041
WVA	20007 15,30

FCP817

WVA No: 20380 15,50
FMSI No: D135


119.8mm = 4.717"

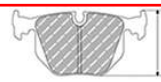
72.0mm = 2.835"


15.1mm = 0.594"


58.7mm = 2.311"

ASTON MARTIN Front, JAGUAR Front, RENAULT Front

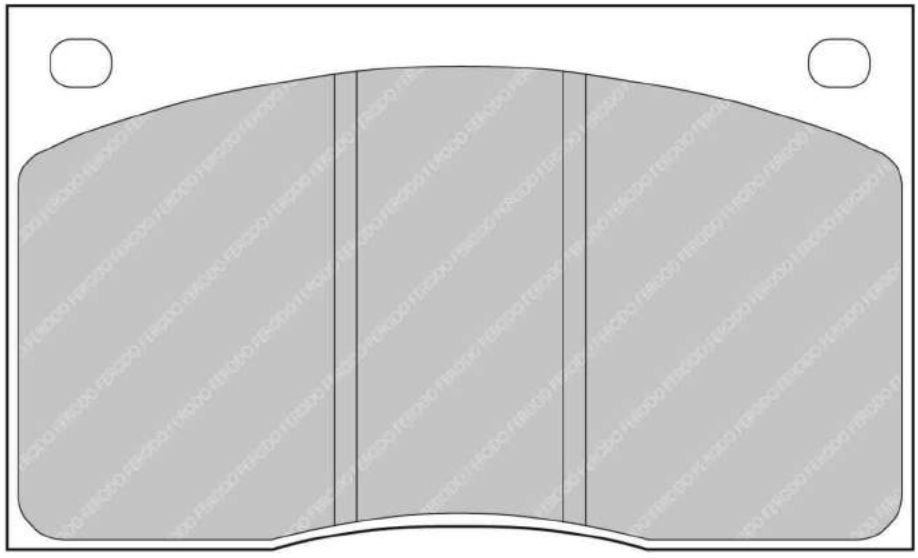

MATERIAL AVAILABILITY						
H	C	R	W	WB	Z	ZB
✔		✔				

CROSS REFERENCE	
FMSI	D135
MINTEX	CVP043
MINTEX	MGB585
WVA	20380 15,50

FERODO RACING
Updated on November 2020

Available
Out of Range
In Introduction
Exhausting
Make to order

FCP823

WVA No: 20037 15,00
FMSI No: D027


88.7mm = 3.492"

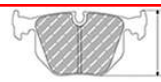
64.0mm = 2.520"


14.7mm = 0.579"


47.4mm = 1.866"

HUMBER Front, MG Front, SINGER Front, SUNBEAM Front

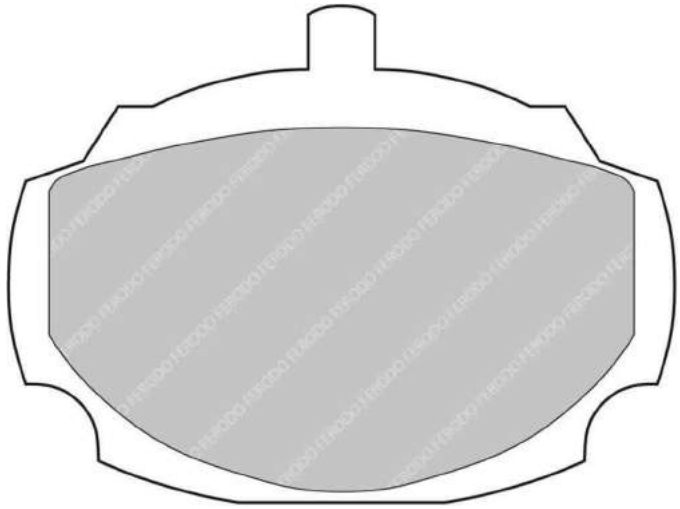

MATERIAL AVAILABILITY						
H	C	R	W	WB	Z	ZB
		✉	✉			

CROSS REFERENCE	
FMSI	D027
MINTEX	MLB10
WVA	20037 15,00

FCP825

WVA No: 20054 14,50
FMSI No: D005


70.0mm = 2.756"

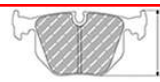
57.9mm = 2.280"


14.5mm = 0.571"


43.0mm = 1.693"

CATERHAM Rear, ROVER Front, SEAT Rear, VAUXHALL Rear

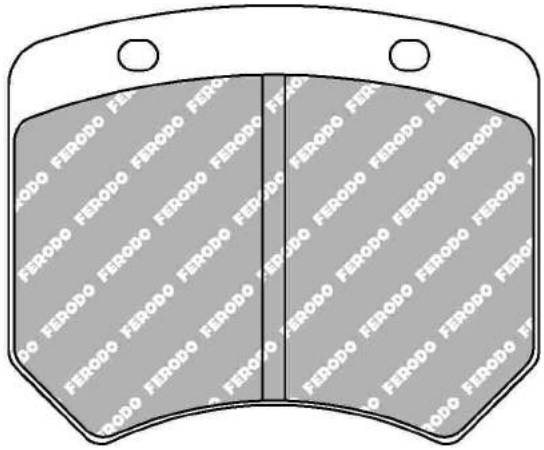

MATERIAL AVAILABILITY						
H	C	R	W	WB	Z	ZB
✔	✔	✔	✔		✔	

CROSS REFERENCE	
AP RACING	CP2399D43
CL BRAKES	5001W43T14
FMSI	D005
FMSI	D5
HAWK	HB108
MINTEX	MLB20
PAGID	1363
PFC	7720
Raybestos	DR304
Raybestos	DR400
Wilwood	5214
Wilwood	5222
WVA	20054 14,50

FERODO RACING
Updated on November 2020

✔ Available
✖ Out of Range
In Introduction
Exhausting
Make to order

FCP832

WVA No: 20577 15,00
FMSI No: D081


99.0mm = 3.898"

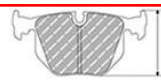
72.0mm = 2.835"


14.7mm = 0.579"


52.8mm = 2.079"

MG Front, ROVER Front

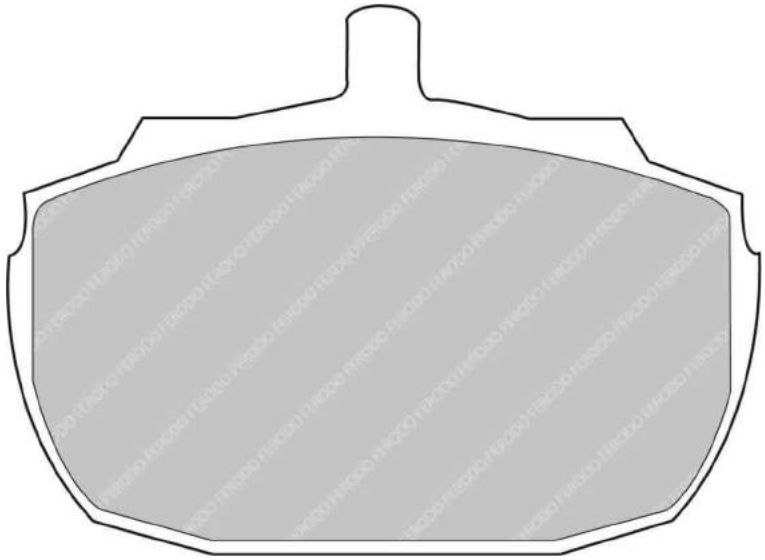

MATERIAL AVAILABILITY						
H	C	R	W	WB	Z	ZB
✔		✔				

CROSS REFERENCE	
FMSI	D081
MINTEX	MLB52
WVA	20577 15,00

FCP840

WVA No: 20754 15,00


83.7mm = 3.295"

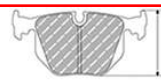
55.0mm = 2.165"


14.9mm = 0.587"


41.0mm = 2.079"

RELIANT Front, ROVER Front

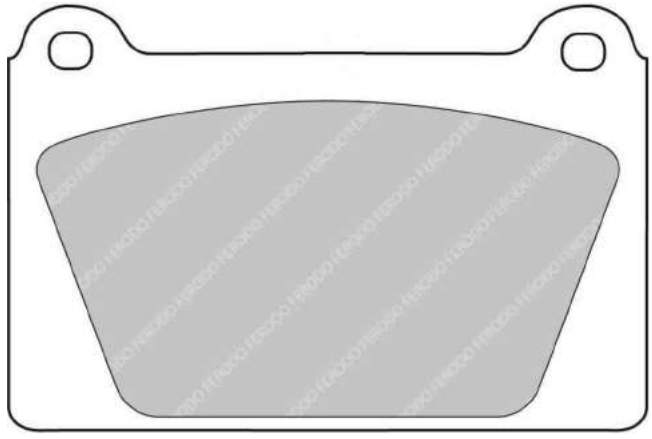

MATERIAL AVAILABILITY						
H	C	R	W	WB	Z	ZB
	✉	✔				

CROSS REFERENCE	
AP RACING	CP2712D44
MINTEX	MLB65
PAGID	8068
PFC	7765
WVA	20754 15,00

FCP845

WVA No: 21463 18,00
FMSI No: D292


100.0mm = 3.937"

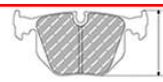
65.0mm = 2.559"


18.0mm = 0.709"


44.0mm = 1.732"

CITROEN Front, DACIA Front, PEUGEOT Front, RENAULT Front, RENAULT-ALPINE Front

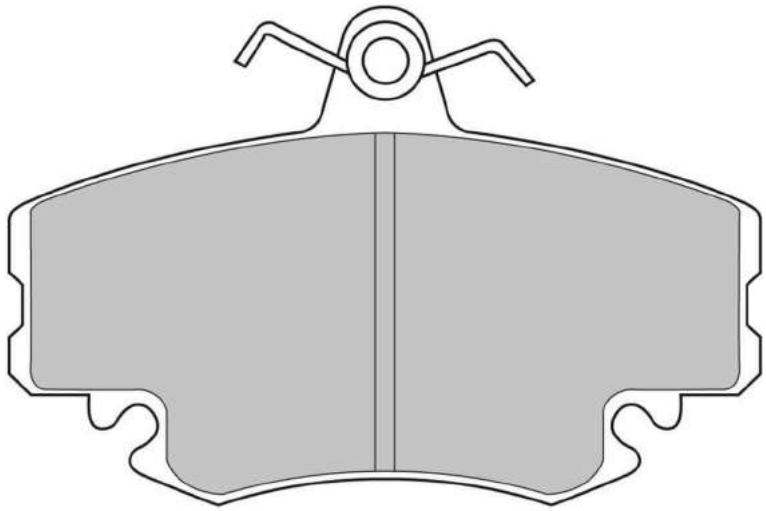

MATERIAL AVAILABILITY						
H	C	R	W	WB	Z	ZB
✔	✔	✔	✉			

CROSS REFERENCE	
ALCON	PNF0084X262.4
BREMBO	07.8301.35
CL BRAKES	4000
FMSI	D292
MINTEX	MDB1628
PAGID	3276
PFC	0292
WVA	21463 18,00

FERODO RACING
Updated on November 2020

✔ Available
✖ Out of Range
In Introduction
Exhausting
Make to order

FCP850

WVA No: 20180 16,80
FMSI No: D396


123.3mm = 4.854"

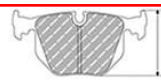
43.6mm = 1.717"


16.0mm = 0.630"


40.3mm = 1.587"

BMW Rear, CITROEN Rear, FIAT Rear, LANCIA Rear, PEUGEOT Rear

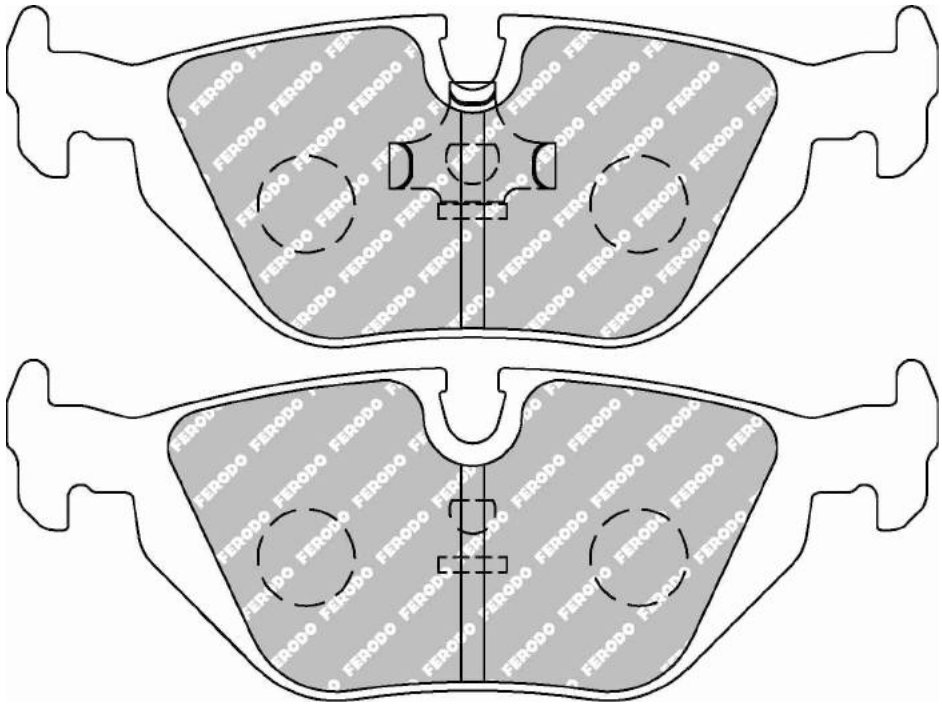

MATERIAL AVAILABILITY						
H	C	R	W	WB	Z	ZB
✔		✔	✔		✔	

CROSS REFERENCE	
BREMBO	07.8301.69
CL BRAKES	4032
FMSI	D396
FMSI	D692
FMSI	D763
HAWK	HB227 0,63
MINTEX	MDB1572
PAGID	8035
PFC	0396.XX
WVA	20180 16,80

FCP856

WVA No: 21284 19,30
FMSI No: D547


156.5mm = 6.161"

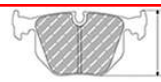
74.8mm = 2.945"


18.5mm = 0.728"


69.6mm = 2.740"

BMW Front, MASERATI Front

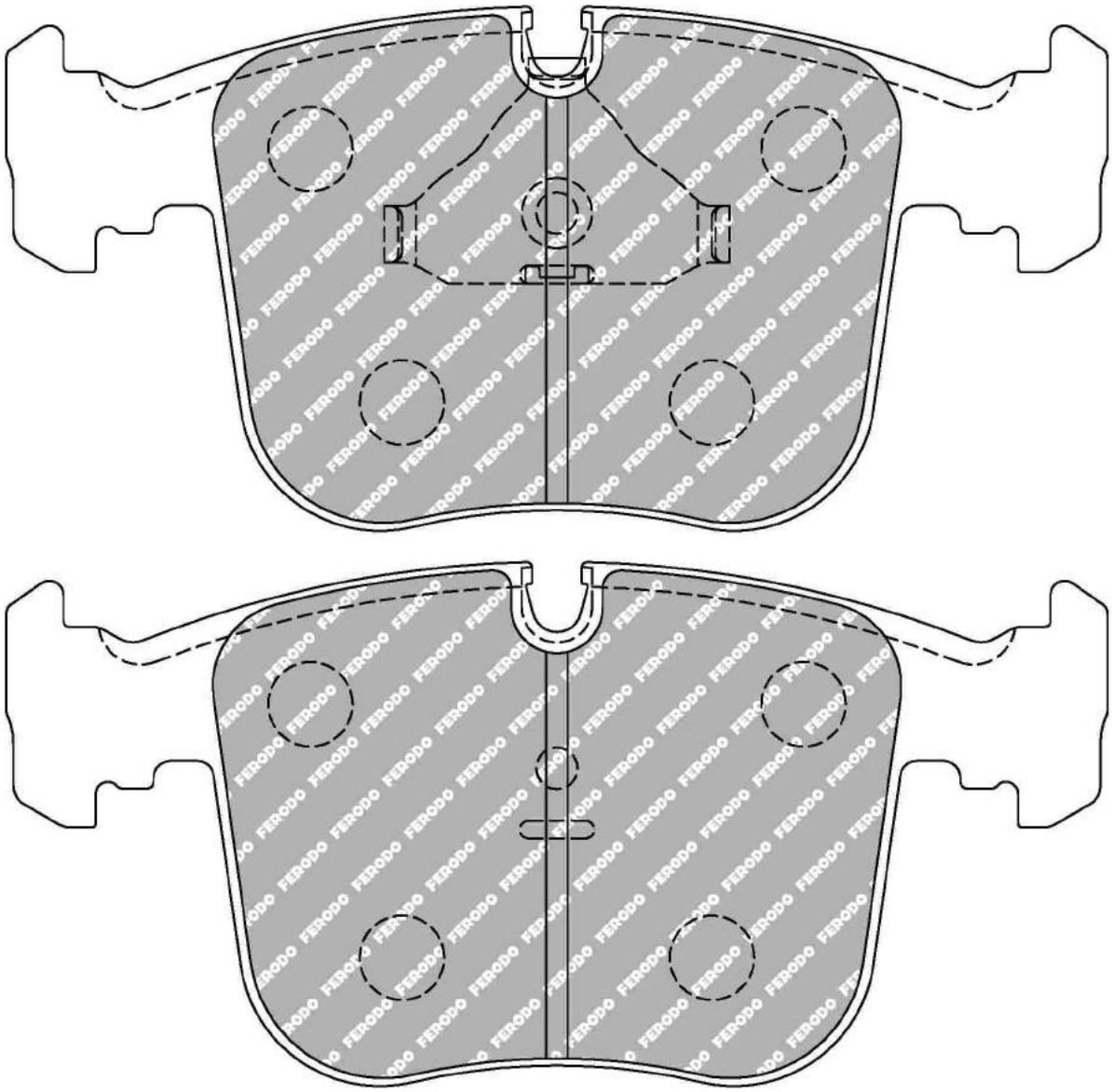

MATERIAL AVAILABILITY						
H	C	R	W	WB	Z	ZB
✔		✉				

CROSS REFERENCE	
BREMBO	07.8300.11
FMSI	D547
HAWK	HB325 0,72
MINTEX	MDB1551
PAGID	2683
WVA	21284 19,30

FERODO RACING

Updated on November 2020

✔ Available
✖ Out of Range
In Introduction
Exhausting
Make to order

FCP857

WVA No: 21282 17,30
FMSI No: D548


123.2mm = 4.850"

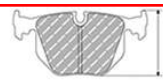
59.4mm = 2.339"


17.0mm = 0.669"


54.8mm = 2.157"

BMW Rear, MASERATI Rear

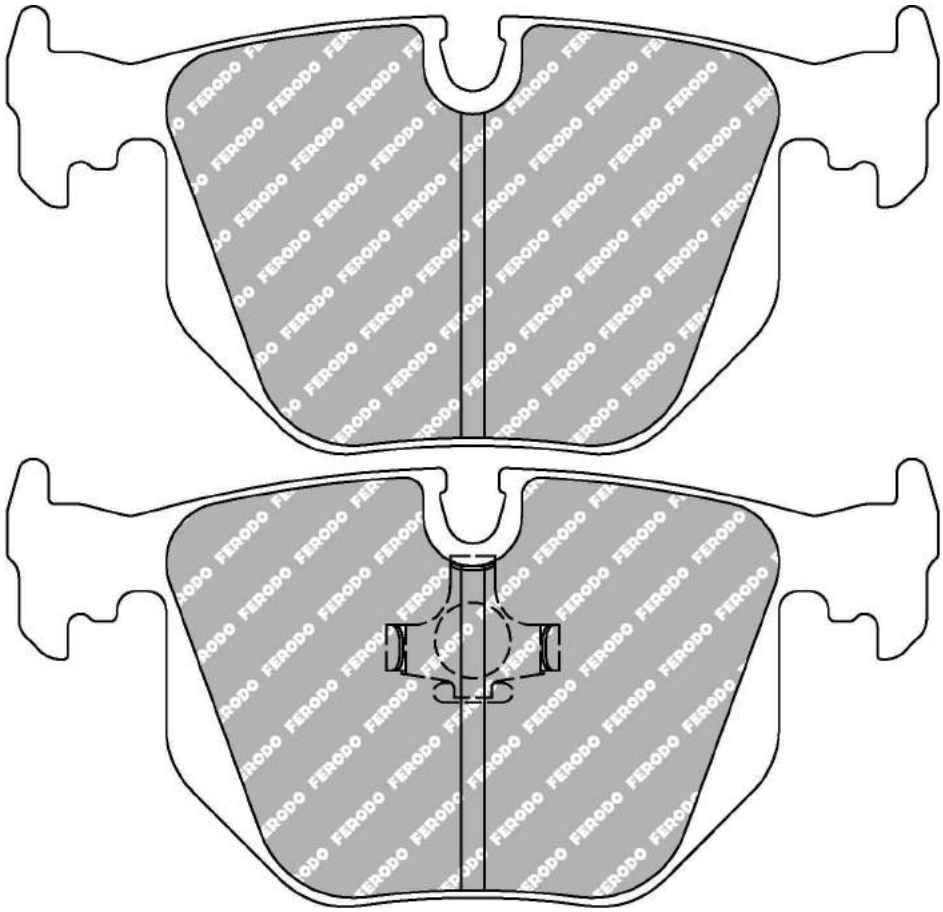

ALSO AVAILABLE		
SHAPE	TH. MM	NOTES
FCP1483	17.2	Different Spring Clip

MATERIAL AVAILABILITY						
H	C	R	W	WB	Z	ZB
✓		✓	✉			

CROSS REFERENCE	
ALCON	PNF0084X347.4
FMSI	D548
HAWK	HB362 0,642
MINTEX	MDB1552
PAGID	2685
WVA	21282 17,30

✓ Available
✗ Out of Range
In Introduction
Exhausting
Make to order

FERODO RACING

Updated on November 2020

FCP859

WVA No: 21626 15,00


120.9mm = 4.760"

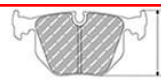
45.0mm = 1.772"


15.0mm = 0.591"


33.9mm = 1.335"

NISSAN Front

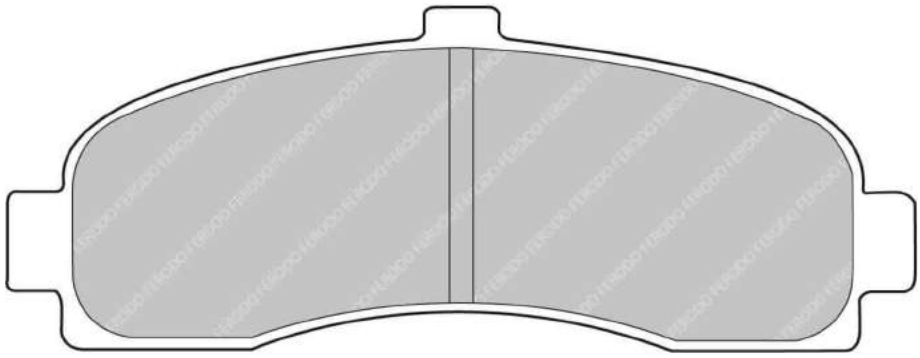

MATERIAL AVAILABILITY						
H	C	R	W	WB	Z	ZB
✉		✔				

CROSS REFERENCE	
BREMBO	07.8301.36
MINTEX	MDB1623
WVA	21626 15,00

FCP867

WVA No: 21601 17,50
FMSI No: D562


133.0mm = 5.236"


53.0mm = 2.087"


17.5mm = 0.689"


44.0mm = 1.732"

TOYOTA Front

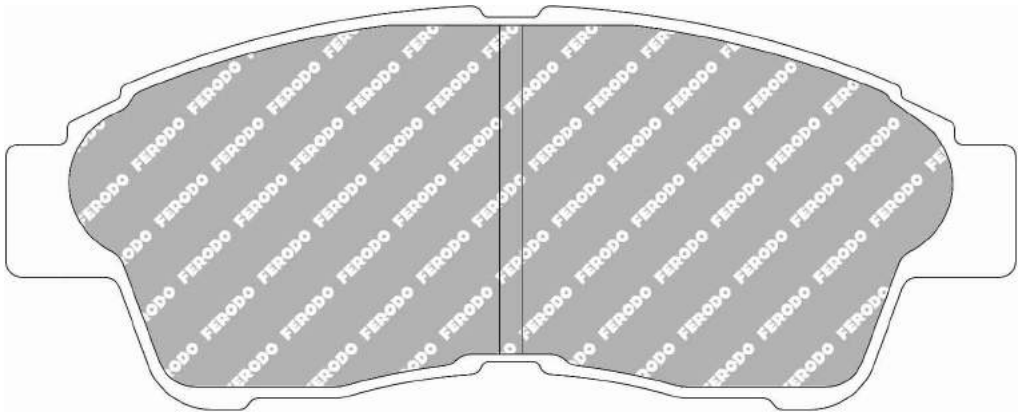

MATERIAL AVAILABILITY						
H	C	R	W	WB	Z	ZB
✔						

CROSS REFERENCE	
BREMBO	07.8300.12
FMSI	D562
FMSI	D695
HAWK	HB310 0,689
MINTEX	MDB1658
PFC	0562.XX
WVA	21601 17,50

FERODO RACING

Updated on November 2020

✔ Available
✖ Out of Range
In Introduction
Exhausting
Make to order

FCP876

WVA No: 21430 17,30



141.5mm = 5.571"
140.3mm = 5.524"

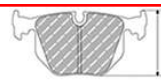

47.8mm = 1.882"
47.8mm = 1.882"



16.5mm = 0.650"
16.5mm = 0.650"



42.2mm = 1.661"
42.2mm = 1.661"

CITROEN Front, PEUGEOT Front

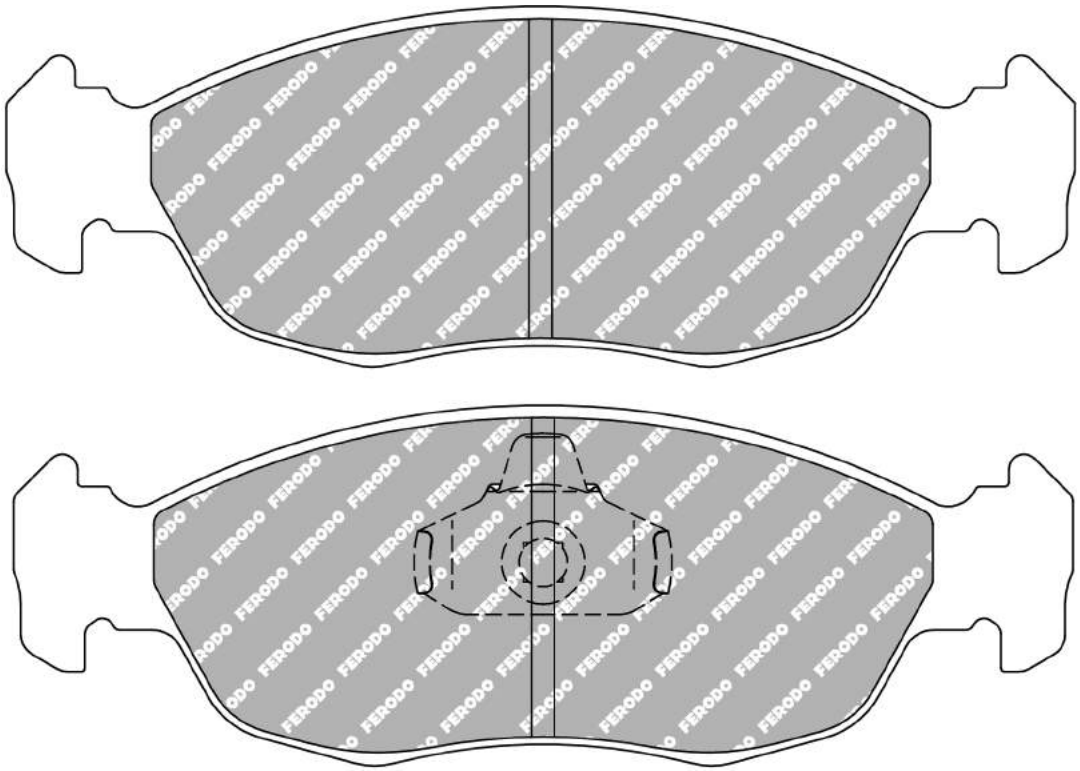

MATERIAL AVAILABILITY						
H	C	R	W	WB	Z	ZB
✔		✔				

CROSS REFERENCE	
BREMBO	07.8301.37
MINTEX	MDB1662
PAGID	1620
WVA	21430 17,30

✔ Available
✘ Out of Range
In Introduction
Exhausting
Make to order

FERODO RACING

Updated on November 2020

FCP878

WVA No: 20410 14,80
FMSI No: D491


126.0mm = 4.961"

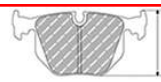
59.0mm = 2.323"


14.6mm = 0.575"


41.0mm = 1.614"

DODGE Rear, RENAULT Rear

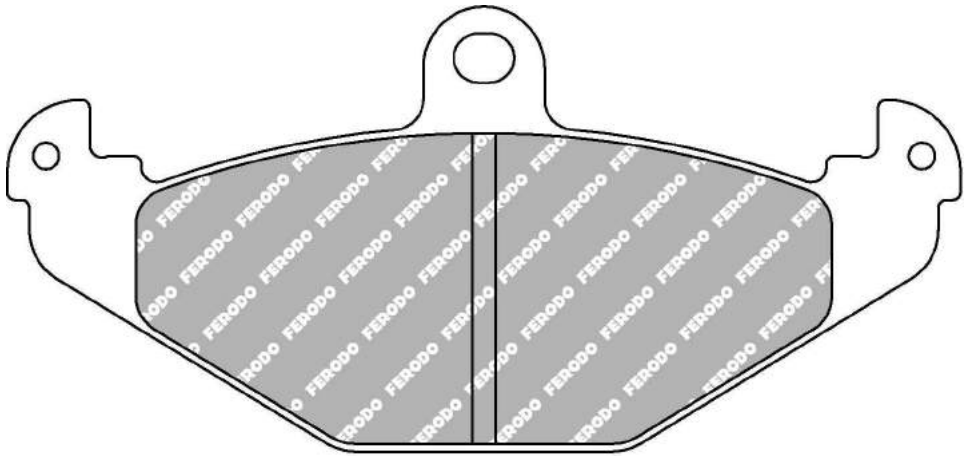

ALSO AVAILABLE		
SHAPE	TH. MM	NOTES
FCP1560	12.9	

MATERIAL AVAILABILITY						
H	C	R	W	WB	Z	ZB
✔		✔				

CROSS REFERENCE	
FMSI	D491
HAWK	HB278 0,583
MINTEX	MDB1445
PAGID	1682
PFC	0491
Raybestos	DR491
SBS	3034
Wilwood	D491
WVA	20410 14,80

FERODO RACING
Updated on November 2020

✔ Available
✖ Out of Range
In Introduction
Exhausting
Make to order

FCP881

WVA No: 20634 15,00
FMSI No: D453


105.2mm = 4.142"

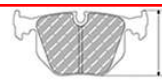
58.0mm = 2.283"


15.0mm = 0.591"


42.0mm = 1.654"

RENAULT Front

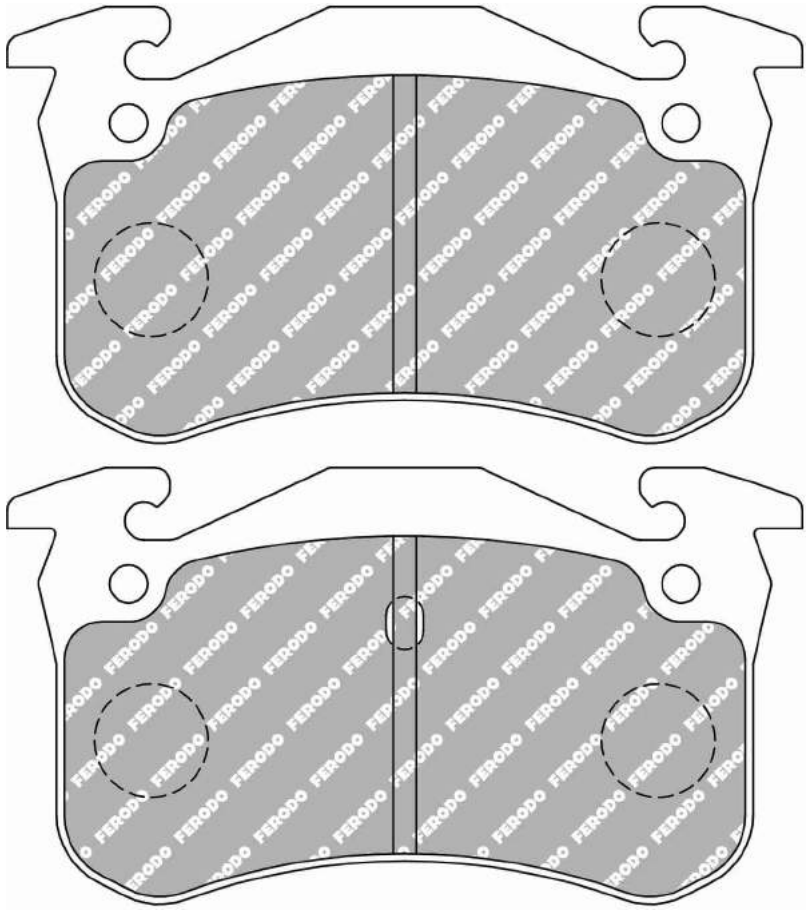

ALSO AVAILABLE		
SHAPE	TH. MM	NOTES
FCP558	11	

MATERIAL AVAILABILITY						
H	C	R	W	WB	Z	ZB

CROSS REFERENCE	
BREMBO	07.8301.38
CL BRAKES	4005
FMSI	D453
MINTEX	MDB1676
WVA	20634 15,00

Available
Out of Range
In Introduction
Exhausting
Make to order

FERODO RACING

Updated on November 2020

FCP891

WVA No: 21402 17,50
FMSI No: D594

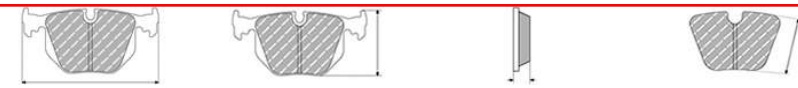

AUDI Front, PORSCHE Front

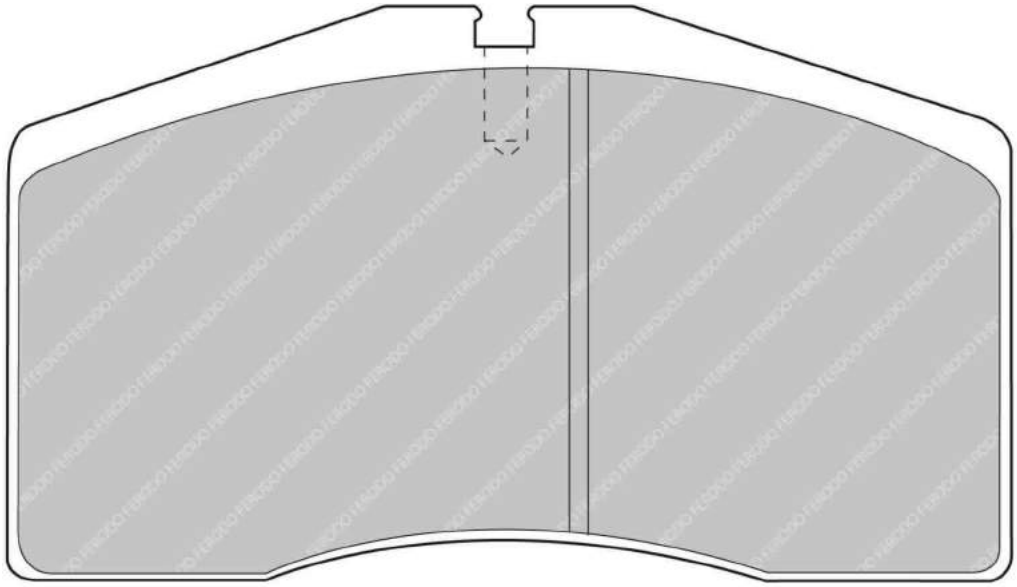

ALSO AVAILABLE		
SHAPE	TH. MM	NOTES
FRP3042	26.5	

MATERIAL AVAILABILITY						
H	C	R	W	WB	Z	ZB
✔		✔	✉			

CROSS REFERENCE	
CL BRAKES	4005
FMSI	D594
HAWK	HB184 .650A
MINTEX	MDB1860
PAGID	1842
PFC	0594.XX.18
WVA	21402 17,50

FERODO RACING
Updated on November 2020

✔ Available
✖ Out of Range
In Introduction
Exhausting
Make to order

FCP905

WVA No: 21651 18,50
FMSI No: D503

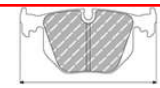
148.8mm = 5.858"

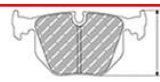
57.0mm = 2.244"


18.5mm = 0.728"


50.5mm = 1.988"

ACURA Front, HONDA Front, ROVER Front

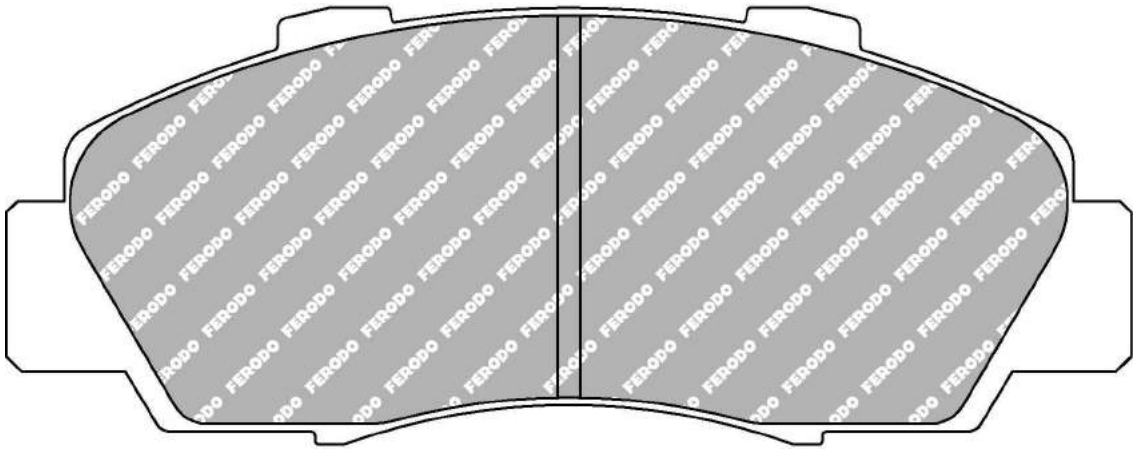

ALSO AVAILABLE		
SHAPE	TH. MM	NOTES
FRP3062	19.5	

MATERIAL AVAILABILITY						
H	C	R	W	WB	Z	ZB
✔		✔				

CROSS REFERENCE	
BREMBO	07.8300.00
CL BRAKES	4044
FMSI	D503
HAWK	HB143 0,68
MINTEX	MDB1543
PAGID	2623
PFC	0503.XX
WVA	21651 18,50

FCP925

WVA No: 21436 17,00


115.1mm = 4.531"


55.0mm = 2.165"


17.0mm = 0.669"


42.0mm = 1.654"

FIAT Front, FIAT AUTO POLAND Front, LANCIA Front

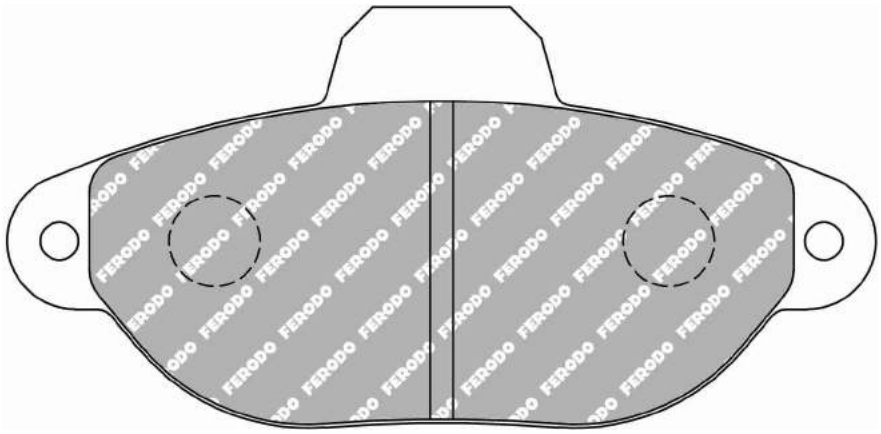

MATERIAL AVAILABILITY						
H	C	R	W	WB	Z	ZB
✔		✔				

CROSS REFERENCE	
BREMBO	07.8301.39
MINTEX	MDB1666
WVA	21436 17,00
WVA	21437 17,00

FCP948

WVA No: 21482 16,70
FMSI No: D563


128.0mm = 5.039"

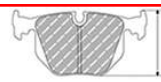
58.0mm = 2.283"


16.7mm = 0.657"


54.0mm = 2.126"

SUBARU Front

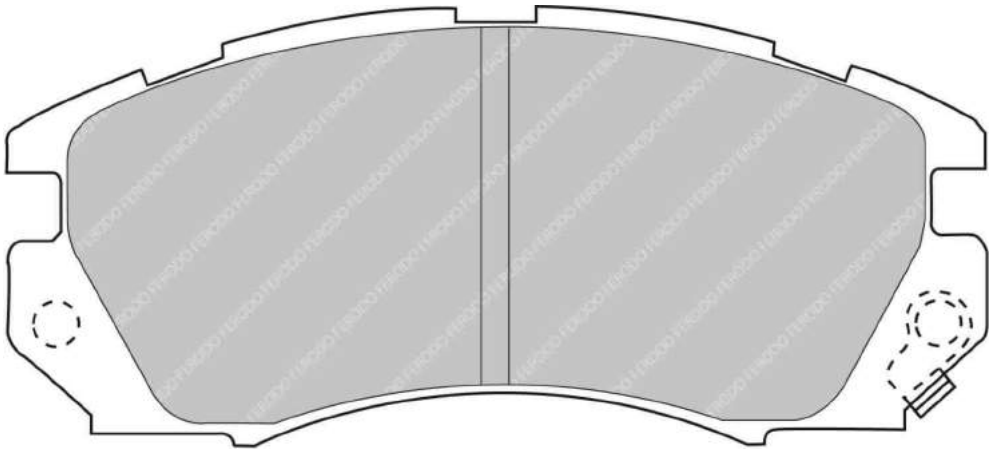

MATERIAL AVAILABILITY						
H	C	R	W	WB	Z	ZB
✔		✔				

CROSS REFERENCE	
FMSI	D563
MINTEX	MDB1688
WVA	21482 16,70

FCP956

WVA No: 21719 14,50


88.8mm = 3.496"

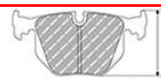
47.5mm = 1.870"


14.4mm = 0.567"


40.5mm = 1.594"

HONDA Rear, MG Rear, ROVER Rear, SUZUKI Rear

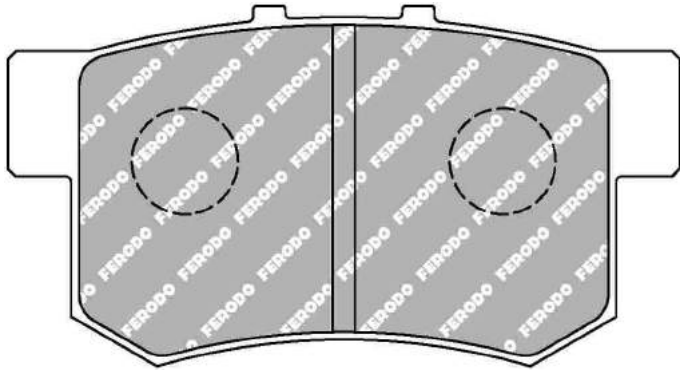

MATERIAL AVAILABILITY						
H	C	R	W	WB	Z	ZB
✔		✔	✉			

CROSS REFERENCE	
MINTEX	MDB1564
PFC	0537
WVA	21719 14,50

FERODO RACING
Updated on November 2020

✔ Available
✖ Out of Range
In Introduction
Exhausting
Make to order

FCP986

WVA No: 21307 14,50
FMSI No: D460

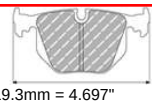
119.3mm = 4.697"


62.0mm = 2.441"


14.5mm = 0.571"


49.5mm = 1.949"

NISSAN Front, SUBARU Front

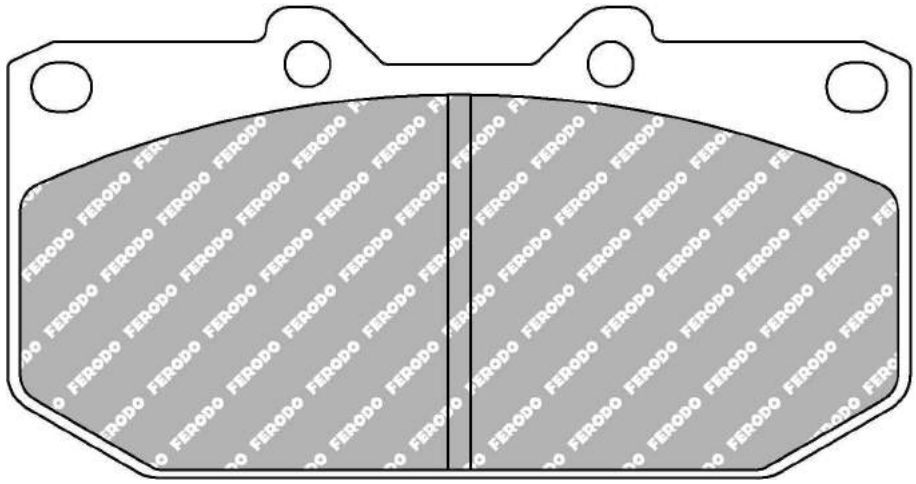

MATERIAL AVAILABILITY						
H	C	R	W	WB	Z	ZB
✔		✔	✉		✔	

CROSS REFERENCE	
ALCON	PNF0084X249.4
BREMBO	07.8300.15
FMSI	D460
FMSI	D647
HAWK	HB178 0,564
MINTEX	MDB1416
PAGID	1406
PFC	0460
PFC	0460.XX
WVA	21307 14,50

FCP995

WVA No: 21606 16,20


90.0mm = 3.543"


54.0mm = 2.126"


16.4mm = 0.646"


39.3mm = 1.547"

ALFA ROMEO Rear, LANCIA Rear

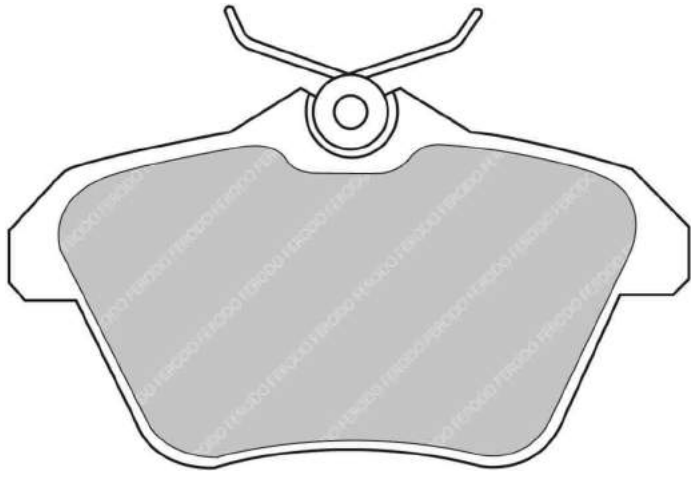

MATERIAL AVAILABILITY						
H	C	R	W	WB	Z	ZB
✔						

CROSS REFERENCE	
MINTEX	MDB1742
WVA	21606 16,20

✔ Available
✖ Out of Range
In Introduction
Exhausting
Make to order

FERODO RACING

Updated on November 2020

FCP997


156.0mm = 6.142"

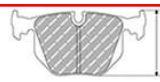
74.0mm = 2.913"


18.0mm = 0.709"


74.0mm = 2.913"

FMSI No: D681

ALPINA Front, BMW Front

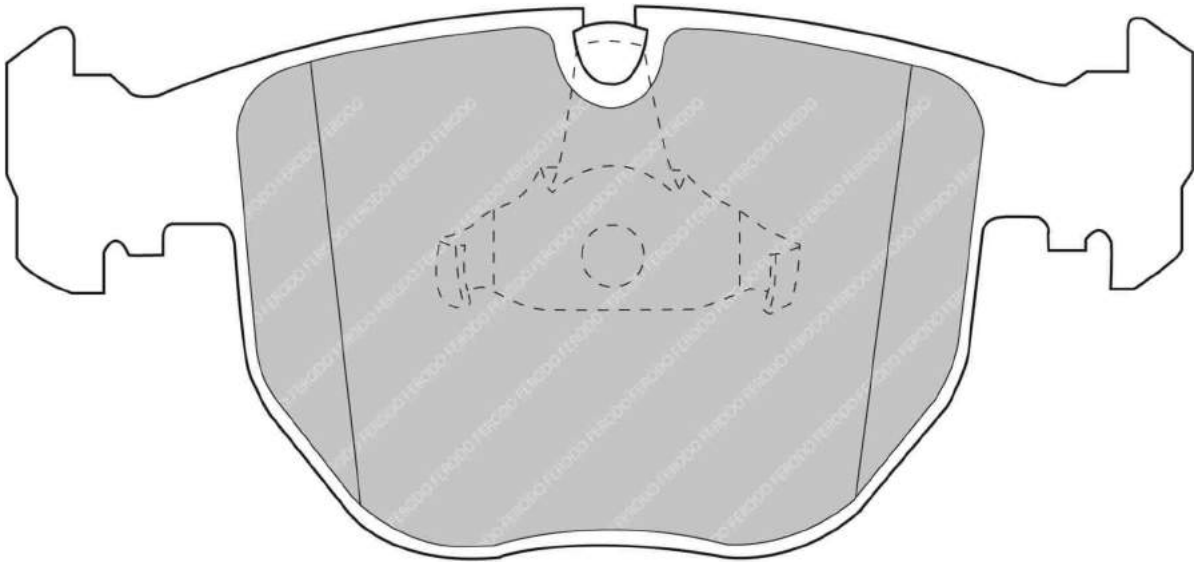

MATERIAL AVAILABILITY						
H	C	R	W	WB	Z	ZB
✔		✉				

CROSS REFERENCE	
FMSI	D681
HAWK	HB497 0,776
MINTEX	MDB1745
PAGID	2683
PFC	0682.XX

FERODO RACING

Updated on November 2020

✔ Available
✖ Out of Range
In Introduction
Exhausting
Make to order

FCP1001

WVA No: 21484 20,00
FMSI No: D682


194.6mm = 7.661"

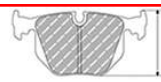
74.0mm = 2.913"


20.8mm = 0.819"


68.9mm = 2.713"

AUDI Front, BMW Front, CHRYSLER Front, MERCEDES Front, VOLKSWAGEN Front

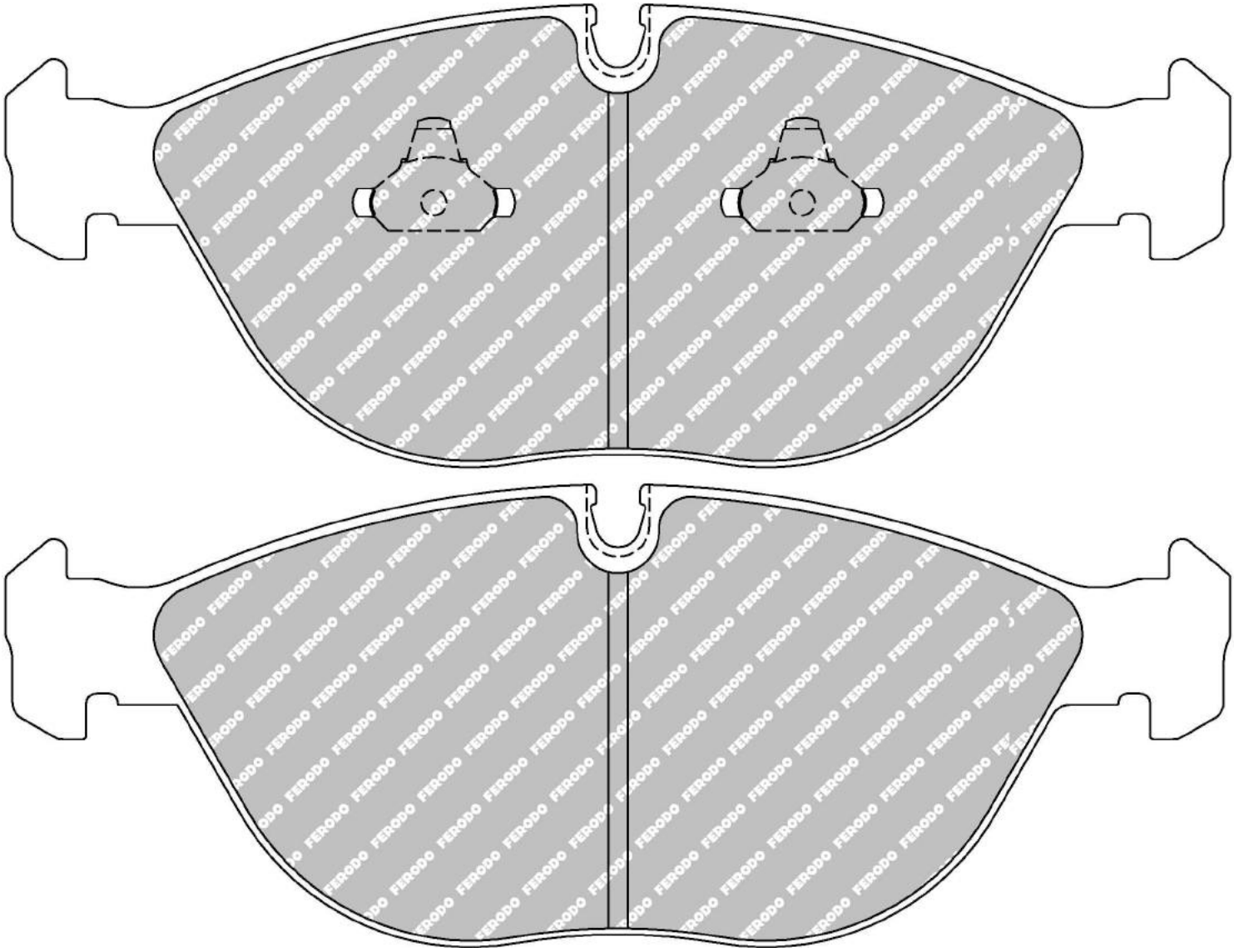

clip design indicative only

MATERIAL AVAILABILITY						
H	C	R	W	WB	Z	ZB
✔					✔	

CROSS REFERENCE	
FMSI	D682
MINTEX	MDB1746
PAGID	2830
WVA	21484 20,00

✔ Available
✖ Out of Range
In Introduction
Exhausting
Make to order

FERODO RACING

Updated on November 2020

FCP1011

WVA No: 23354 13,00
FMSI No: D635


110.1mm = 4.335"

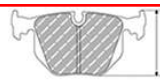
61.0mm = 2.402"


12.9mm = 0.508"


52.5mm = 2.067"

MAZDA Front

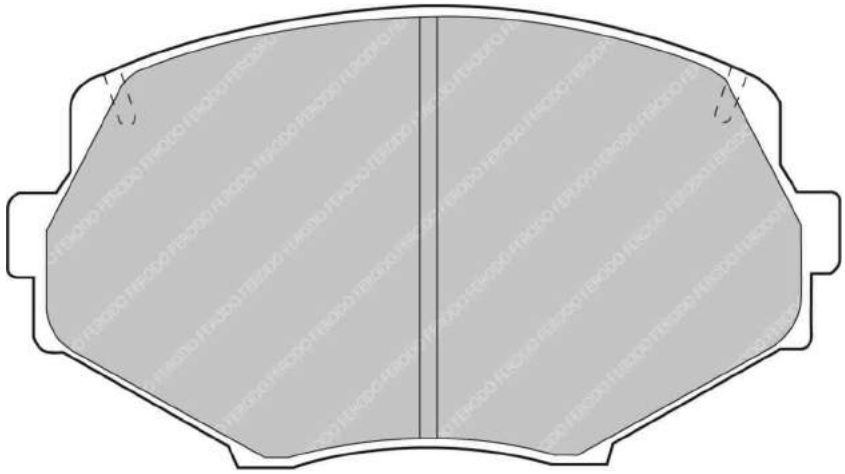

MATERIAL AVAILABILITY						
H	C	R	W	WB	Z	ZB
✔		✉				

CROSS REFERENCE	
CL BRAKES	4107
FMSI	D635
HAWK	HB149 0,505
MINTEX	MDB1686
PAGID	8127
Raybestos	DR635
WVA	23354 13,00

FCP1012

WVA No: 23387 12,50
FMSI No: D636


102.0mm = 4.016"

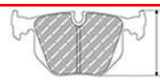
43.0mm = 1.693"


13.0mm = 0.512"


30.3mm = 1.193"

MAZDA Rear

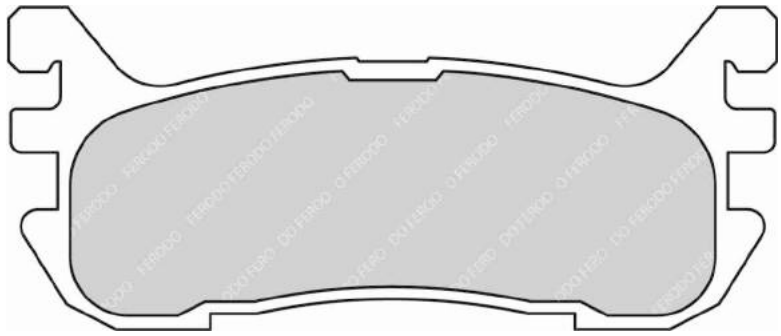

MATERIAL AVAILABILITY						
H	C	R	W	WB	Z	ZB
✔						

CROSS REFERENCE	
CL BRAKES	4106
FMSI	D636
HAWK	HB159 0,492
MINTEX	MDB1705
MINTEX	MDB1893
PAGID	8129
WVA	23387 12,50

FERODO RACING
Updated on November 2020

✔ Available
✖ Out of Range
In Introduction
Exhausting
Make to order

FCP1021

WVA No: 21947


116mm = 4.567"

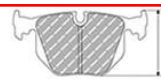
44.3mm = 1.744"


15.5mm = 0.610"


33.9mm = 1.335"

LEXUS Rear, MITSUBISHI Rear, TOYOTA Rear

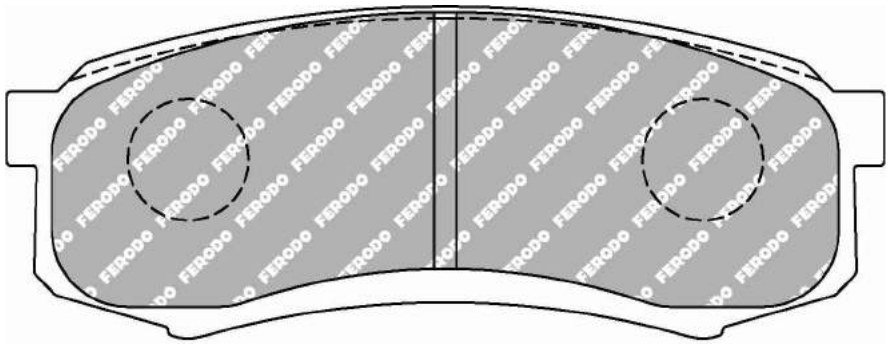

MATERIAL AVAILABILITY						
H	C	R	W	WB	Z	ZB
✔						

CROSS REFERENCE	
BREMBO	P83 024
WVA	21947

FCP1049

WVA No: 21664 19,00



151.6mm = 5.969"
151.6mm = 5.969"

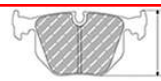

66.2mm = 2.606"
60.0mm = 2.362"



19.1mm = 0.752"
19.1mm = 0.752"



54.1mm = 2.130"
54.1mm = 2.130"

MERCEDES Front

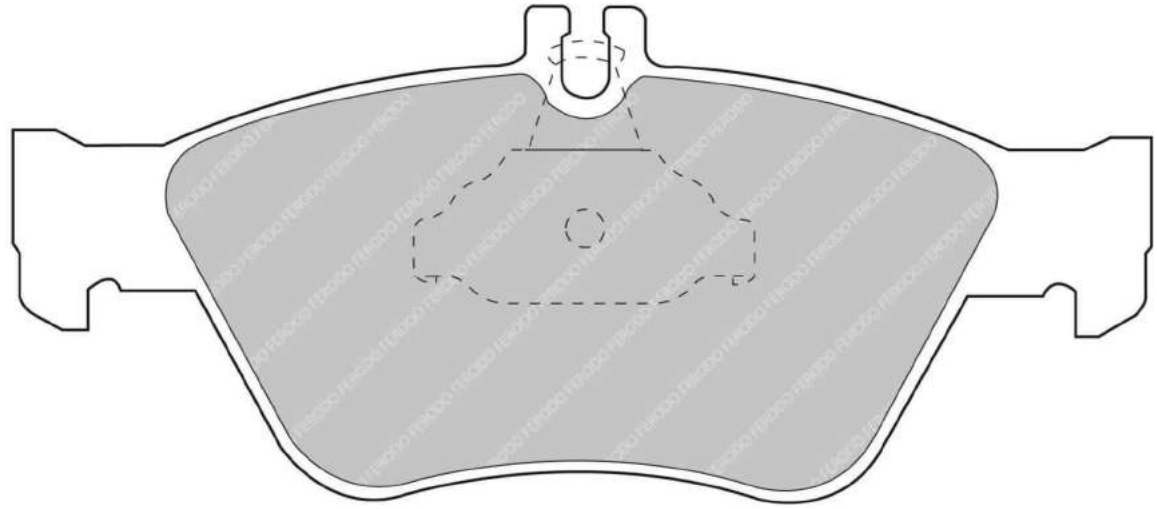



MATERIAL AVAILABILITY						
H	C	R	W	WB	Z	ZB
✔						

CROSS REFERENCE	
BREMBO	07.8301.41
MINTEX	MDB1736
WVA	21664 19,00

FERODO RACING

Updated on November 2020

Available
Out of Range
In Introduction
Exhausting
Make to order

FCP1050

WVA No: 21670 19,50
FMSI No: D740


156.5mm = 6.161"
156.5mm = 6.161"

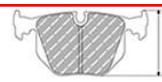
69.5mm = 2.736"
66.9mm = 2.634"


20.4mm = 0.803"
20.4mm = 0.803"


58.4mm = 2.299"
58.4mm = 2.299"

CHRYSLER Front, MERCEDES Front

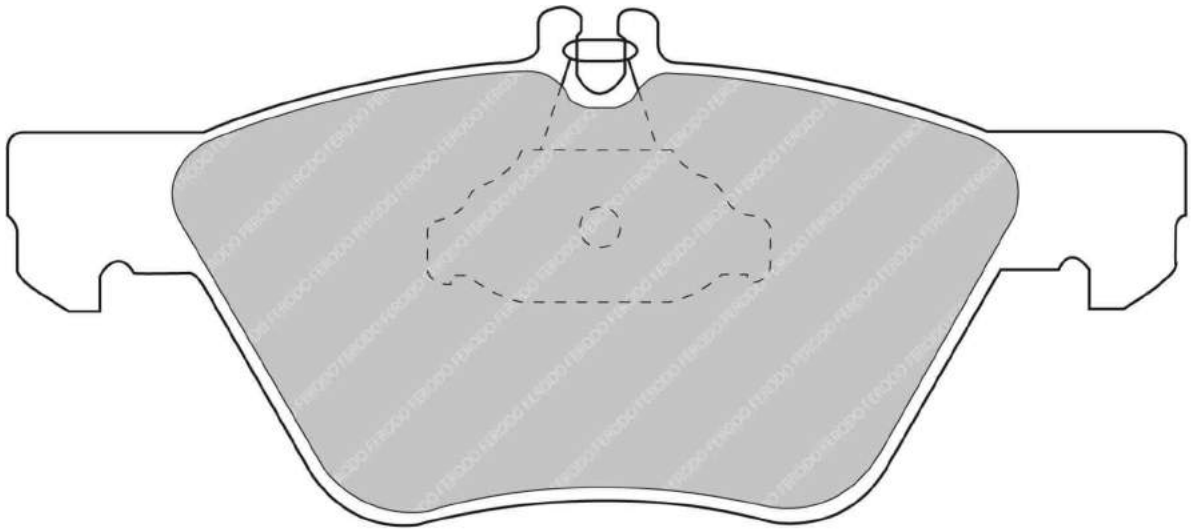



MATERIAL AVAILABILITY						
H	C	R	W	WB	Z	ZB
✔						

CROSS REFERENCE	
BREMBO	07.8301.42
FMSI	D740
HAWK	HB495 0,756
MINTEX	MDB1871
WVA	21670 19,50

✔ Available
✖ Out of Range
In Introduction
Exhausting
Make to order

FERODO RACING

Updated on November 2020

FCP1052

WVA No: 21636 18,00



155.2mm = 6.110"
156.4mm = 6.157"

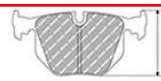

61.7mm = 2.429"
58.9mm = 2.319"



18.5mm = 0.728"
18.5mm = 0.728"



54.3mm = 2.138"
54.3mm = 2.138"

ALFA ROMEO Front, FIAT Front, LANCIA Front

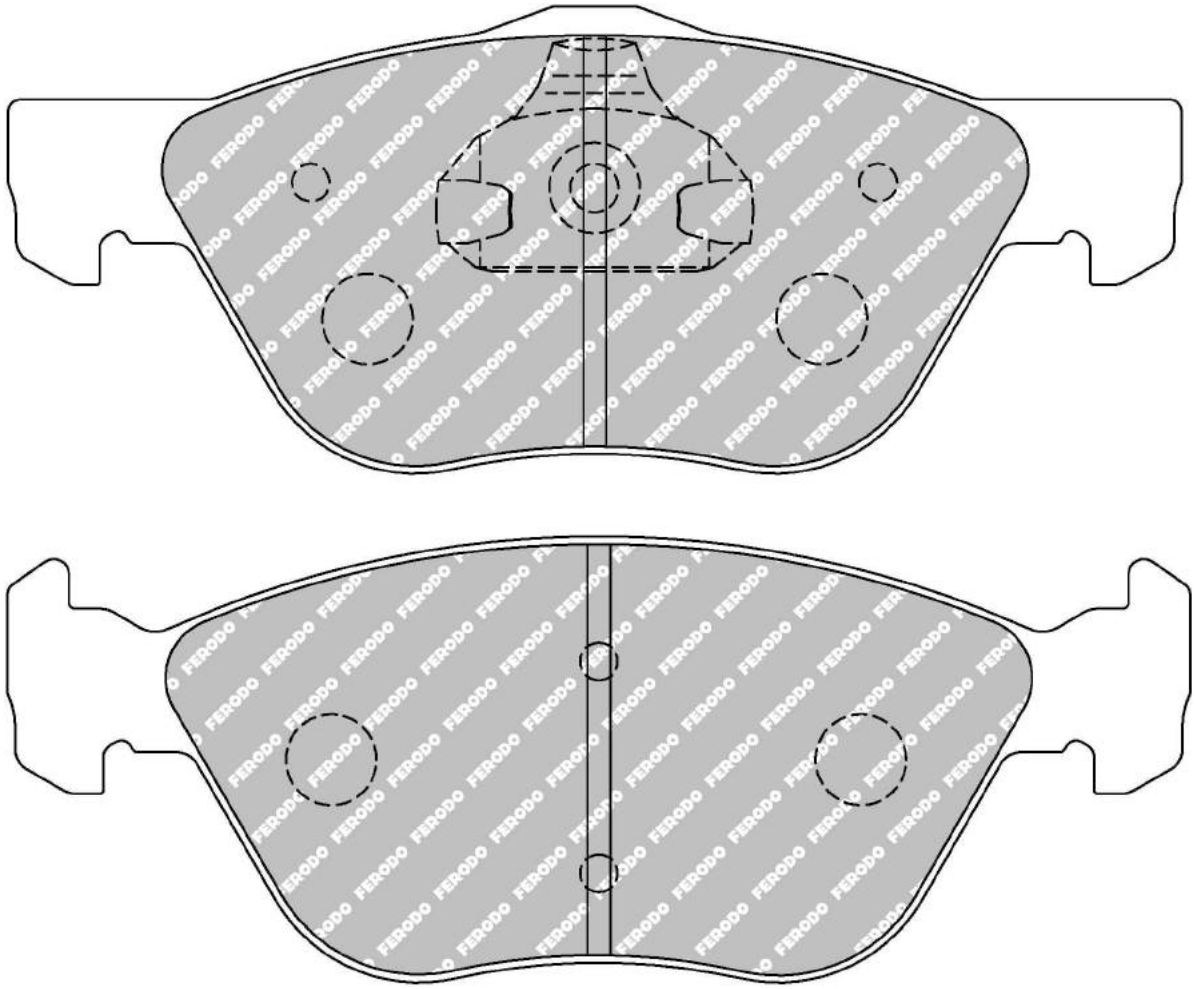

MATERIAL AVAILABILITY						
H	C	R	W	WB	Z	ZB
✔		✔				

CROSS REFERENCE	
BREMBO	07.8301.43
MINTEX	MDB1735
MINTEX	MDB2068
WVA	21636 18,00

FERODO RACING

Updated on November 2020

Available
Out of Range
In Introduction
Exhausting
Make to order

FCP1056

WVA No: 21927 17,00


156.4mm = 6.157"

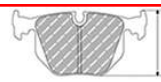
52.5mm = 2.067"


17.9mm = 0.705"


48.1mm = 1.894"

ALFA ROMEO Front, FIAT Front, LANCIA Front

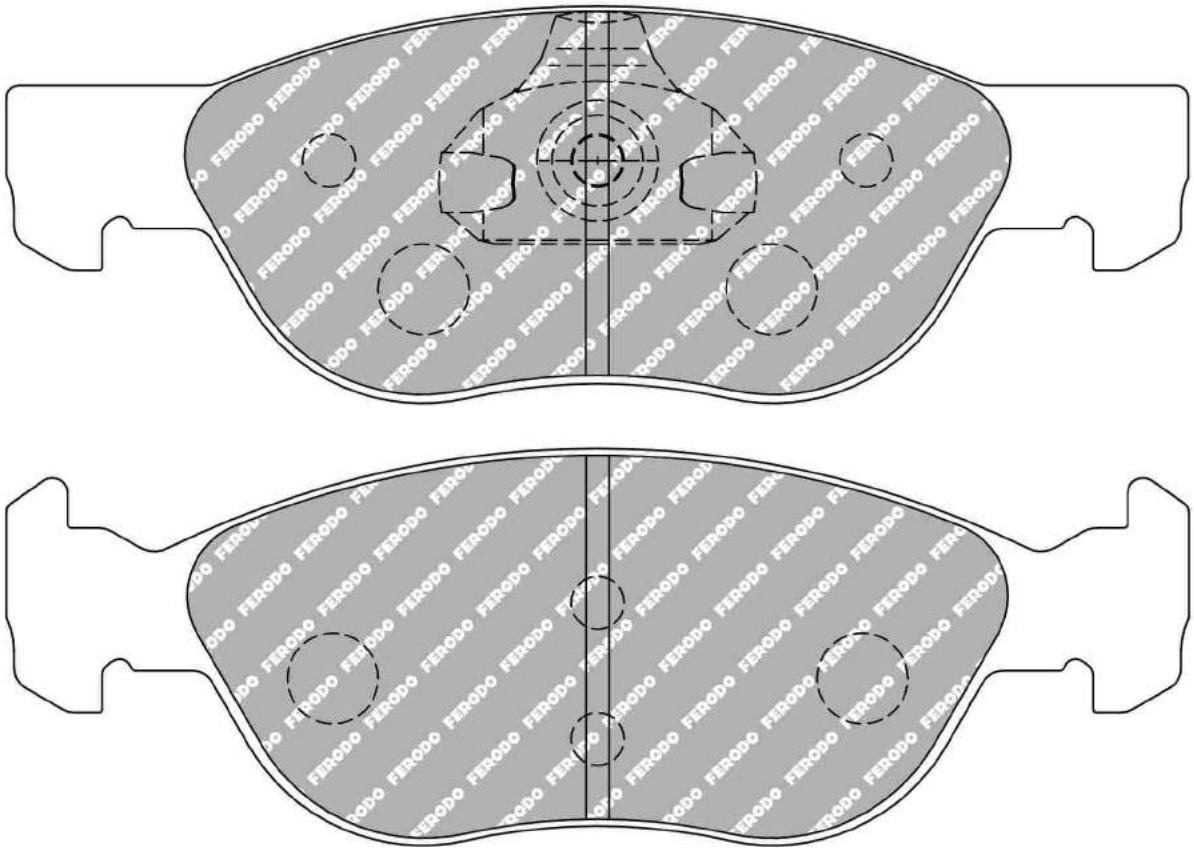

MATERIAL AVAILABILITY						
H	C	R	W	WB	Z	ZB
✔						

CROSS REFERENCE	
BREMBO	07.8301.45
MINTEX	MDB1734
WVA	21927 17,00

✔ Available
✖ Out of Range
In Introduction
Exhausting
Make to order

FERODO RACING

Updated on November 2020

FCP1063

WVA No: 21674 18,00


130.0mm = 5.118"

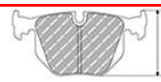
57.0mm = 2.244"


18.5mm = 0.728"


49.4mm = 1.945"

BMW Front, CITROEN Front, PEUGEOT Front

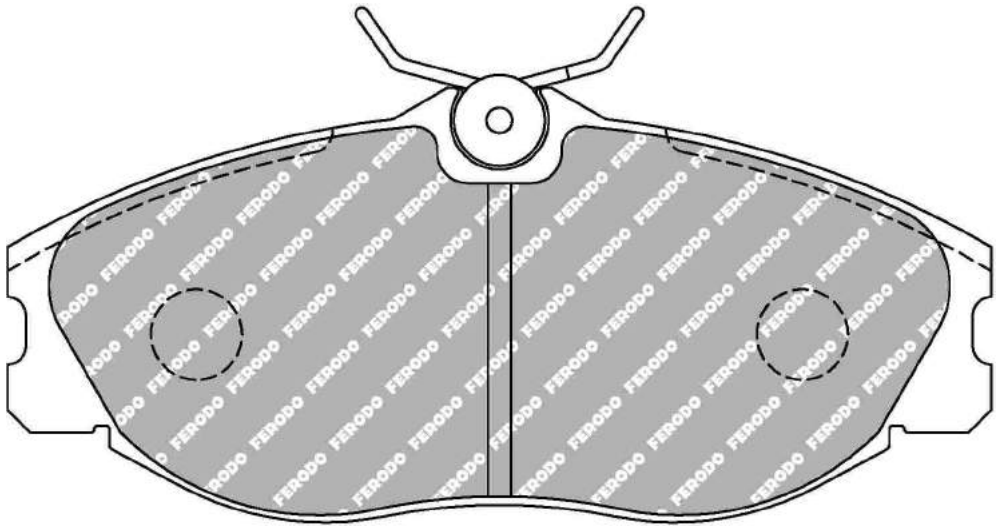

MATERIAL AVAILABILITY						
H	C	R	W	WB	Z	ZB
✔		✔				

CROSS REFERENCE	
BREMBO	07.8301.00
BREMBO	07.8301.46
MINTEX	MDB1732
WVA	21674 18,00

FERODO RACING

Updated on November 2020

Available
Out of Range
In Introduction
Exhausting
Make to order

FCP1068

WVA No: 21829 19,50
FMSI No: D819


156.5mm = 6.161"
155.2mm = 6.110"

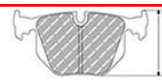
74.0mm = 2.913"
74.0mm = 2.913"


19.5mm = 0.768"
19.5mm = 0.768"


61.0mm = 2.402"
61.0mm = 2.402"

OPEL Front, SAAB Front, VAUXHALL Front

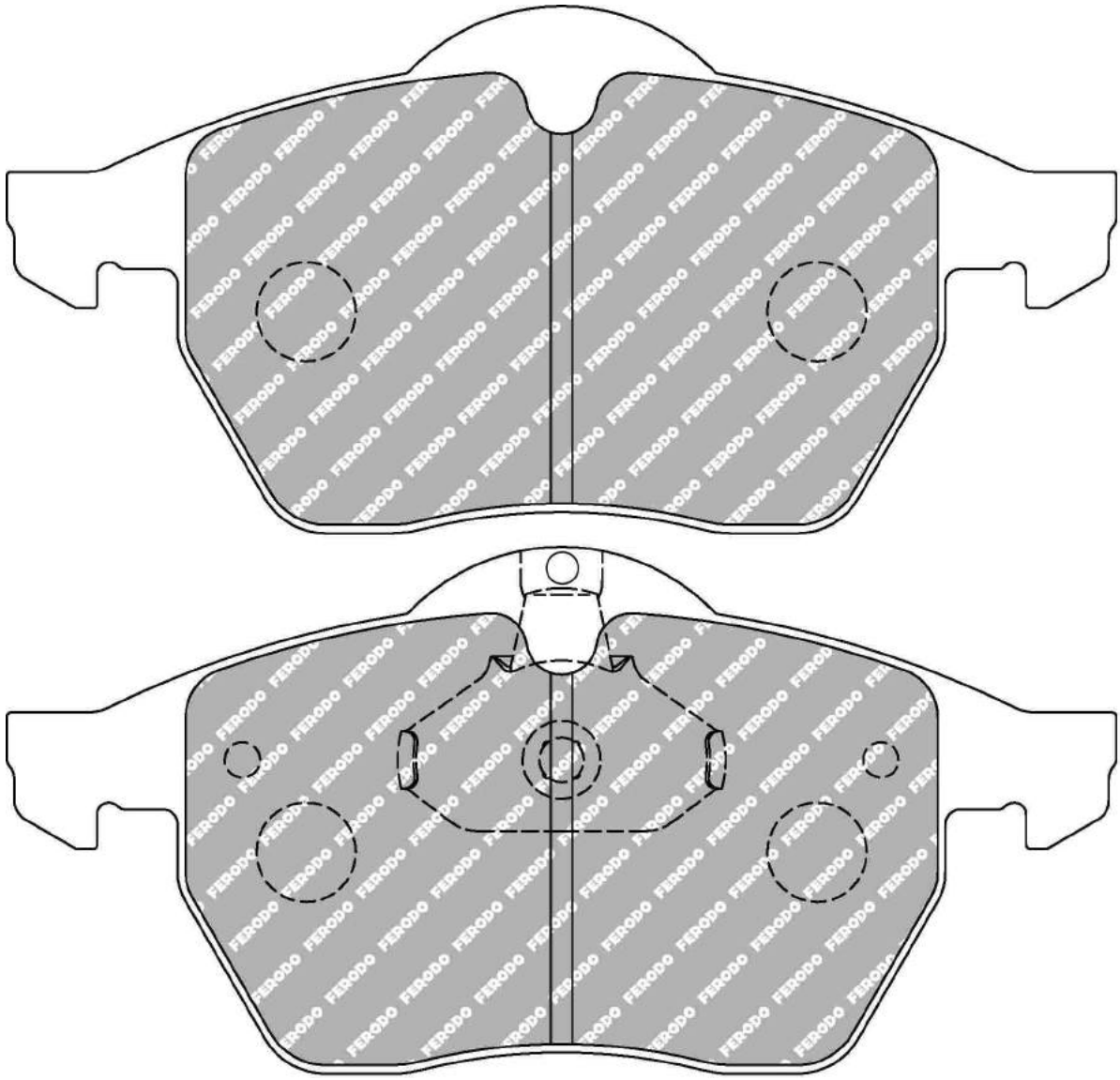

MATERIAL AVAILABILITY						
H	C	R	W	WB	Z	ZB
✔						

CROSS REFERENCE	
BREMBO	07.8301.48
CL BRAKES	4031
FMSI	D819
HAWK	HB388 0,756
MINTEX	MDB1813
PAGID	2275
WVA	21829 19,50

✔ Available
✖ Out of Range
In Introduction
Exhausting
Make to order

FERODO RACING

Updated on November 2020

FCP1073

WVA No: 21677 19,50
FMSI No: D946


156.5mm = 6.161"
156.5mm = 6.161"

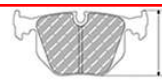
63.9mm = 2.516"
63.9mm = 2.516"


20.2mm = 0.795"
20.2mm = 0.795"


58.4mm = 2.299"
58.4mm = 2.299"

BMW Front

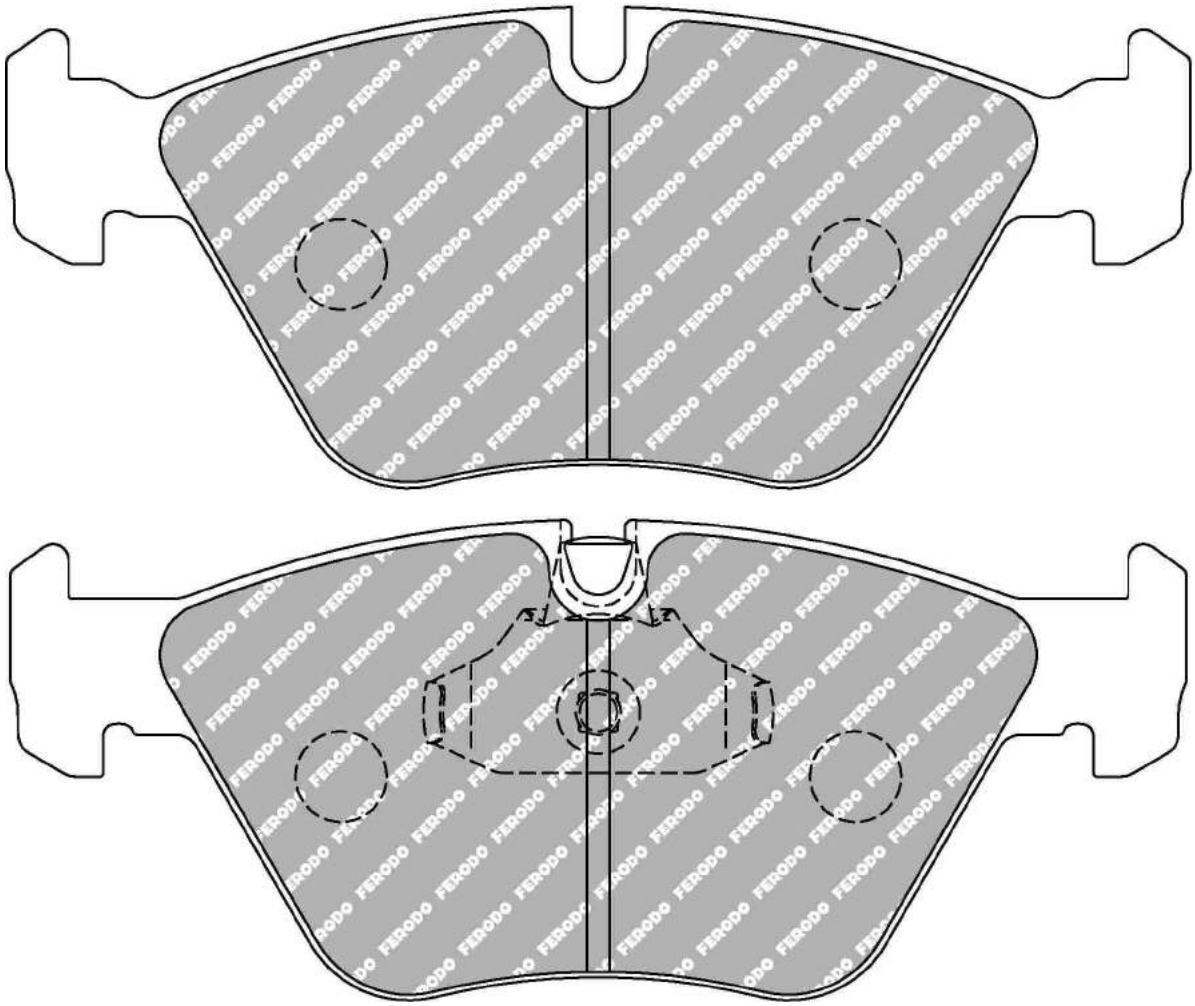

MATERIAL AVAILABILITY						
H	C	R	W	WB	Z	ZB
✔			✔		✉	

CROSS REFERENCE	
CL BRAKES	4033
FMSI	D946
HAWK	HB464 0,764
MINTEX	MDB1817
WVA	21677 19,50

FERODO RACING
Updated on November 2020

Available
Out of Range
In Introduction
Exhausting
Make to order

FCP1081

WVA No: 23103-23104 18,00
FMSI No: D350



FORD Front, MAZDA Front

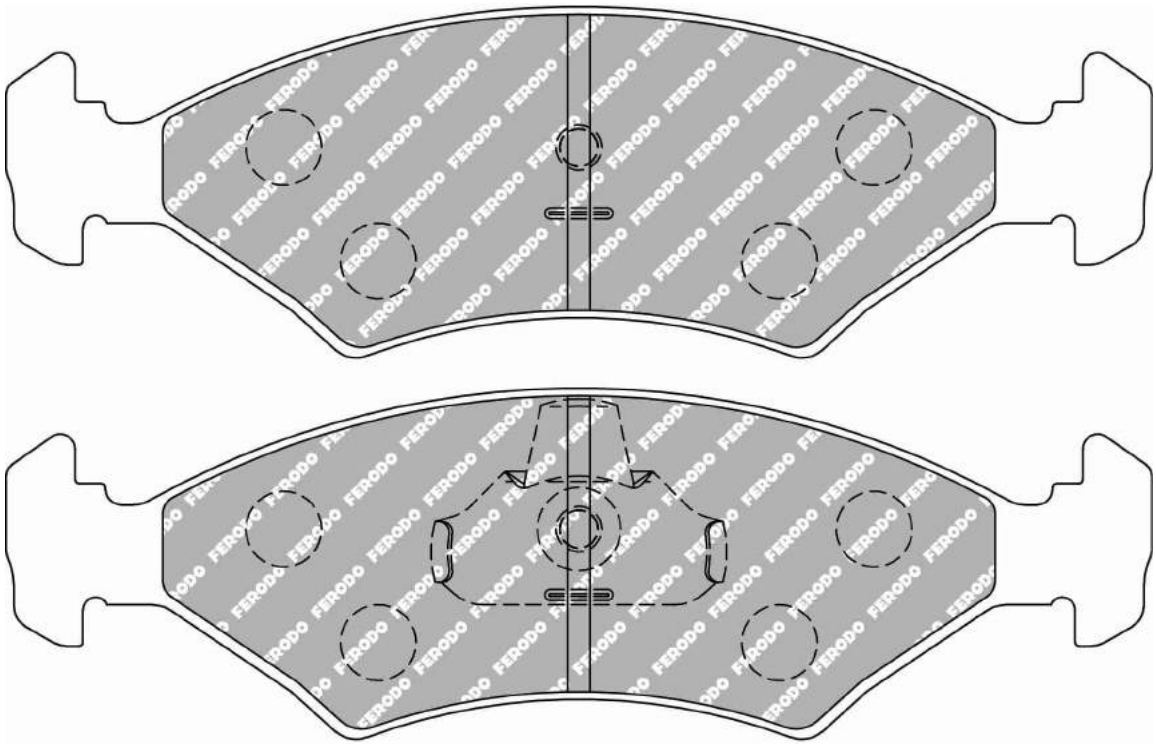

MATERIAL AVAILABILITY						
H	C	R	W	WB	Z	ZB
✔		✔				

CROSS REFERENCE	
ALCON	PNF0084X325.4
BREMBO	07.8301.51
FMSI	D350
MINTEX	MDB1883
MINTEX	MDB2110
WVA	23103-23104 18,00

✔ Available
✖ Out of Range
In Introduction
Exhausting
Make to order

FERODO RACING

Updated on November 2020

FCP1082

WVA No: 23101 18,00


141.5mm = 5.571"

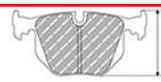
45.0mm = 1.772"


17.5mm = 0.689"


39.0mm = 1.535"

FORD Front, MAZDA Front

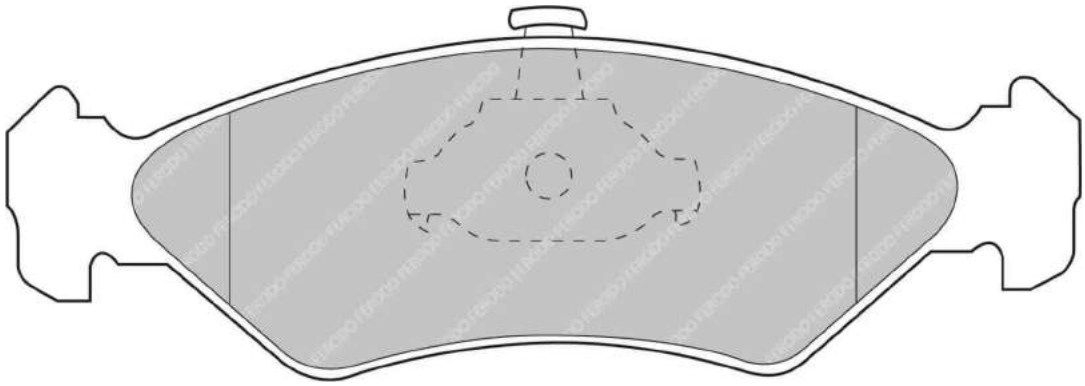

MATERIAL AVAILABILITY						
H	C	R	W	WB	Z	ZB
✔		✉				

CROSS REFERENCE	
BREMBO	07.8301.52
MINTEX	MDB1884
WVA	23101 18,00

FCP1093

WVA No: 21920 15,60
FMSI No: D837


130.1mm = 5.122"

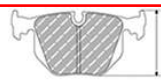
72.8mm = 2.866"


14.5mm = 0.571"


44.5mm = 1.752"

MITSUBISHI Front, VOLVO Front

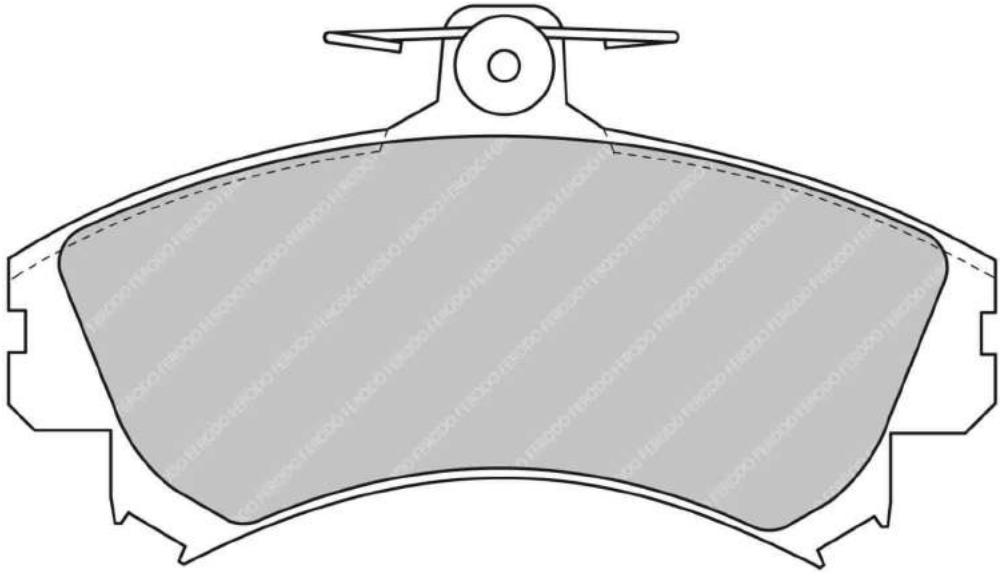

MATERIAL AVAILABILITY						
H	C	R	W	WB	Z	ZB
✔		✖				

CROSS REFERENCE	
BREMBO	07.8301.53
FMSI	D837
HAWK	HB500 0,645
MINTEX	MDB1727
WVA	21920 15,60

FERODO RACING

Updated on November 2020

✔ Available
✖ Out of Range
In Introduction
Exhausting
Make to order

FCP1094

WVA No: 21974 19,40
FMSI No: D768


146.4mm = 5.764"

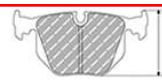
55.2mm = 2.173"


19.7mm = 0.776"


50.1mm = 1.972"

AUDI Front, PORSCHE Front, SEAT Front, SKODA Front, VOLKSWAGEN Front

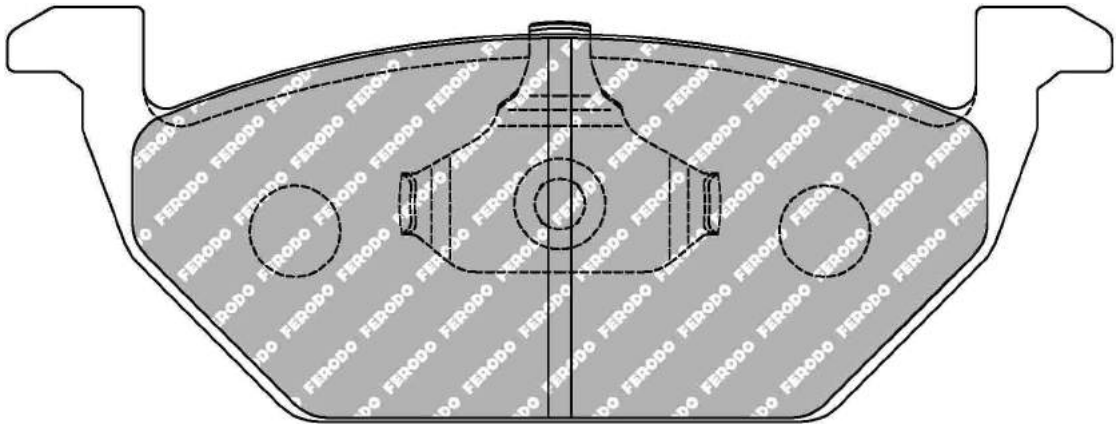

MATERIAL AVAILABILITY						
H	C	R	W	WB	Z	ZB
✔		✉			✉	

CROSS REFERENCE	
BREMBO	07.8300.04
CL BRAKES	4088
FMSI	D768
HAWK	HB365 0,728
MINTEX	MDB1811
MINTEX	MDB2034
WVA	21974 19,40

✔ Available
✖ Out of Range
In Introduction
Exhausting
✉ Make to order

FERODO RACING

Updated on November 2020

FCP1112

WVA No: 23124 19,00


130.0mm = 5.118"

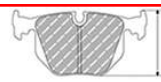
56.0mm = 2.205"


18.0mm = 0.709"


44.4mm = 1.748"

CITROEN Front, PEUGEOT Front

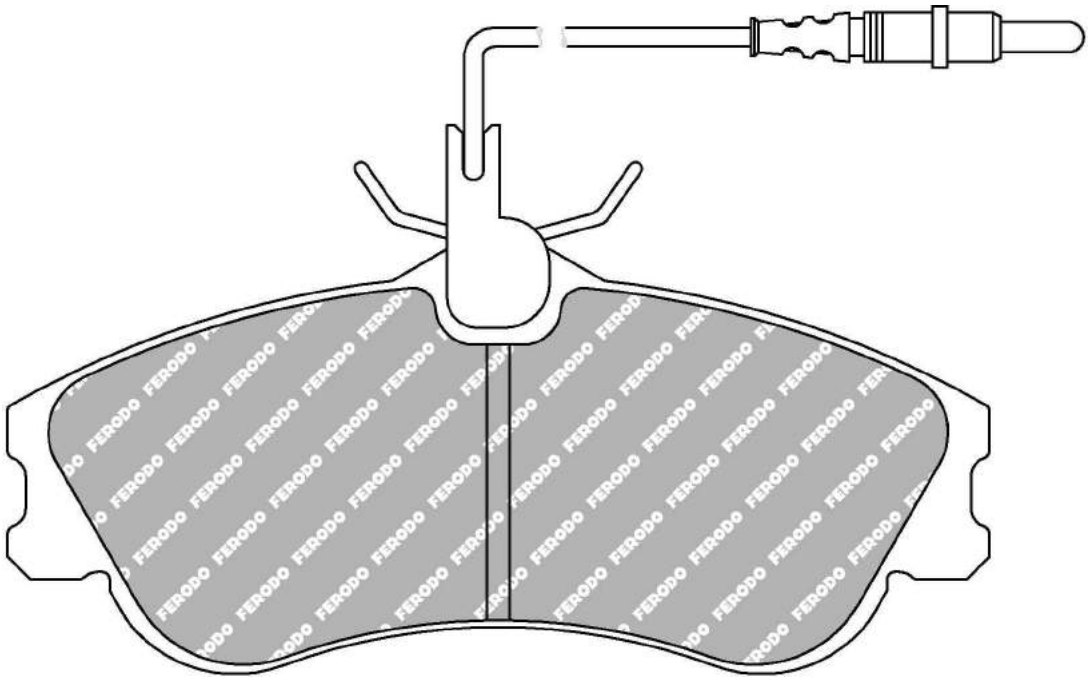

MATERIAL AVAILABILITY						
H	C	R	W	WB	Z	ZB
✔						

CROSS REFERENCE	
MINTEX	MDB1812
WVA	23124 19,00

FCP1113

WVA No: 23177 14,30


88.0mm = 3.465"

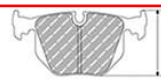
44.5mm = 1.752"


14.4mm = 0.567"


41.7mm = 1.642"

ALFA ROMEO Rear, FIAT Rear, LANCIA Rear

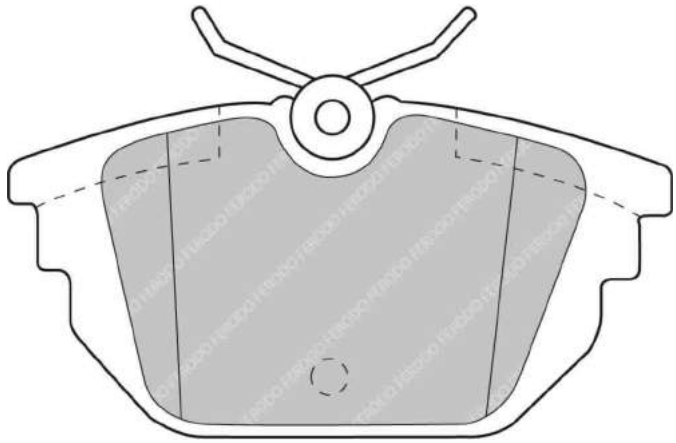

MATERIAL AVAILABILITY						
H	C	R	W	WB	Z	ZB
✔		✔				

CROSS REFERENCE	
BREMBO	07.8301.55
MINTEX	MDB1309
MINTEX	MDB1876
WVA	23177 14,30

FERODO RACING

Updated on November 2020

Available
Out of Range
In Introduction
Exhausting
Make to order

FCP1133


95.0mm = 3.740"

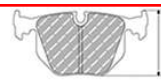
49.0mm = 1.929"


18.0mm = 0.709"


43.5mm = 1.713"

FMSI No: D278

CITROEN Front, PEUGEOT Front

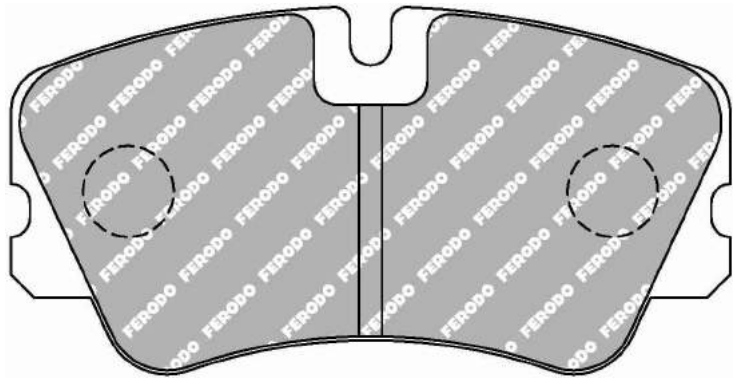

MATERIAL AVAILABILITY						
H	C	R	W	WB	Z	ZB
✔	✖	✔				

CROSS REFERENCE	
ALCON	PNF0084X299.4
BREMBO	07.8301.56
CL BRAKES	4020
FMSI	D278
FMSI	D439
FMSI	D493
HAWK	HB195 0,64
PAGID	2388
PFC	0278.XX

FCP1134

WVA No: 23140 19,30



156.5mm = 6.161"
155.3mm = 6.114"

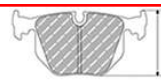

63.8mm = 2.512"
59.3mm = 2.335"



18.5mm = 0.728"
18.5mm = 0.728"



52.9mm = 2.083"
52.9mm = 2.083"

ALFA ROMEO Front

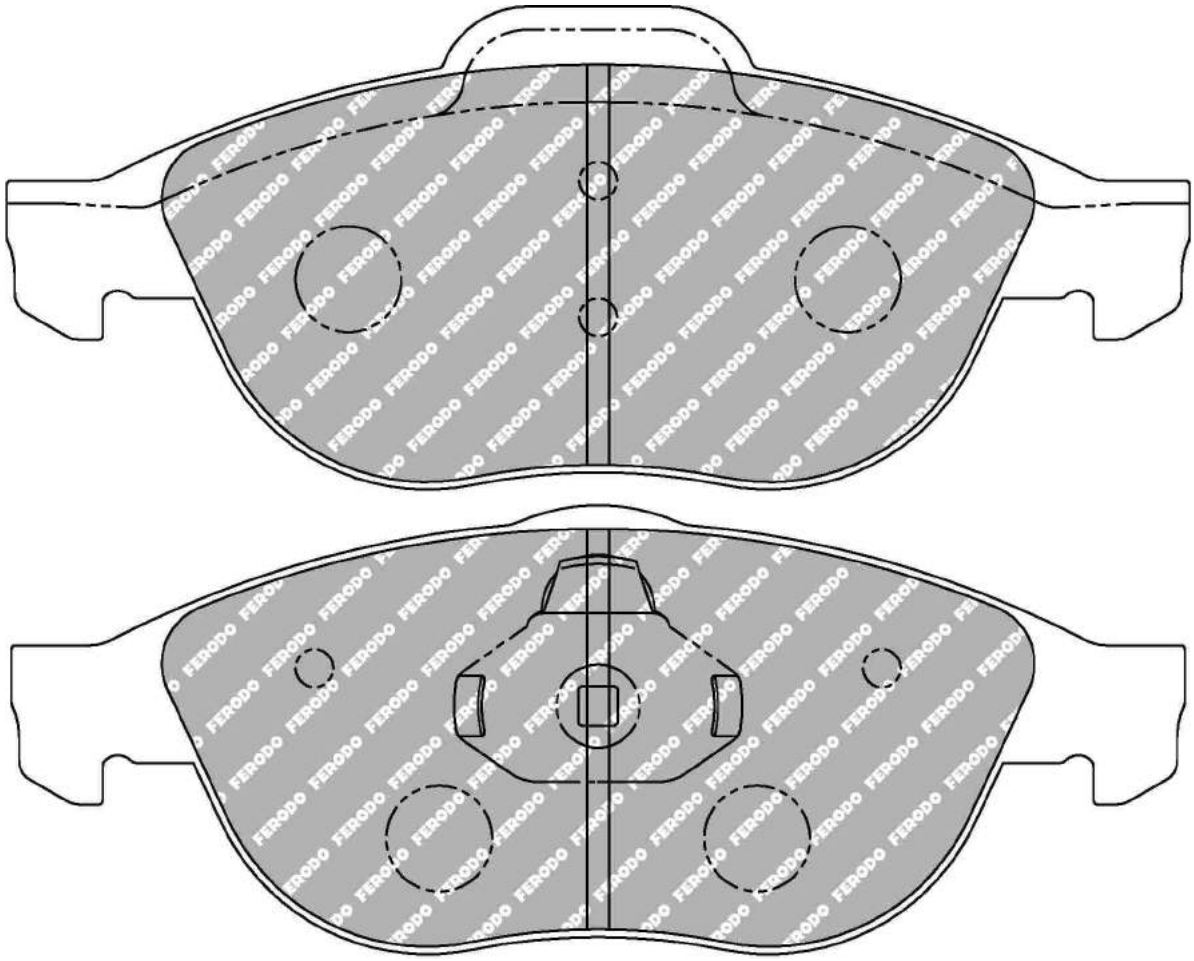

MATERIAL AVAILABILITY						
H	C	R	W	WB	Z	ZB
✔		✖				

CROSS REFERENCE	
BREMBO	07.8301.57
MINTEX	MDB1934
MINTEX	MDB2132
WVA	23140 19,30

FERODO RACING

Updated on November 2020

✔ Available
✖ Out of Range
In Introduction
Exhausting
Make to order

FCP1160

WVA No: 21931 17,00


151.4mm = 5.961"

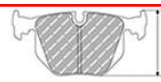
52.0mm = 2.047"


17.1mm = 0.673"


48.1mm = 1.894"

FIAT Front, LANCIA Front

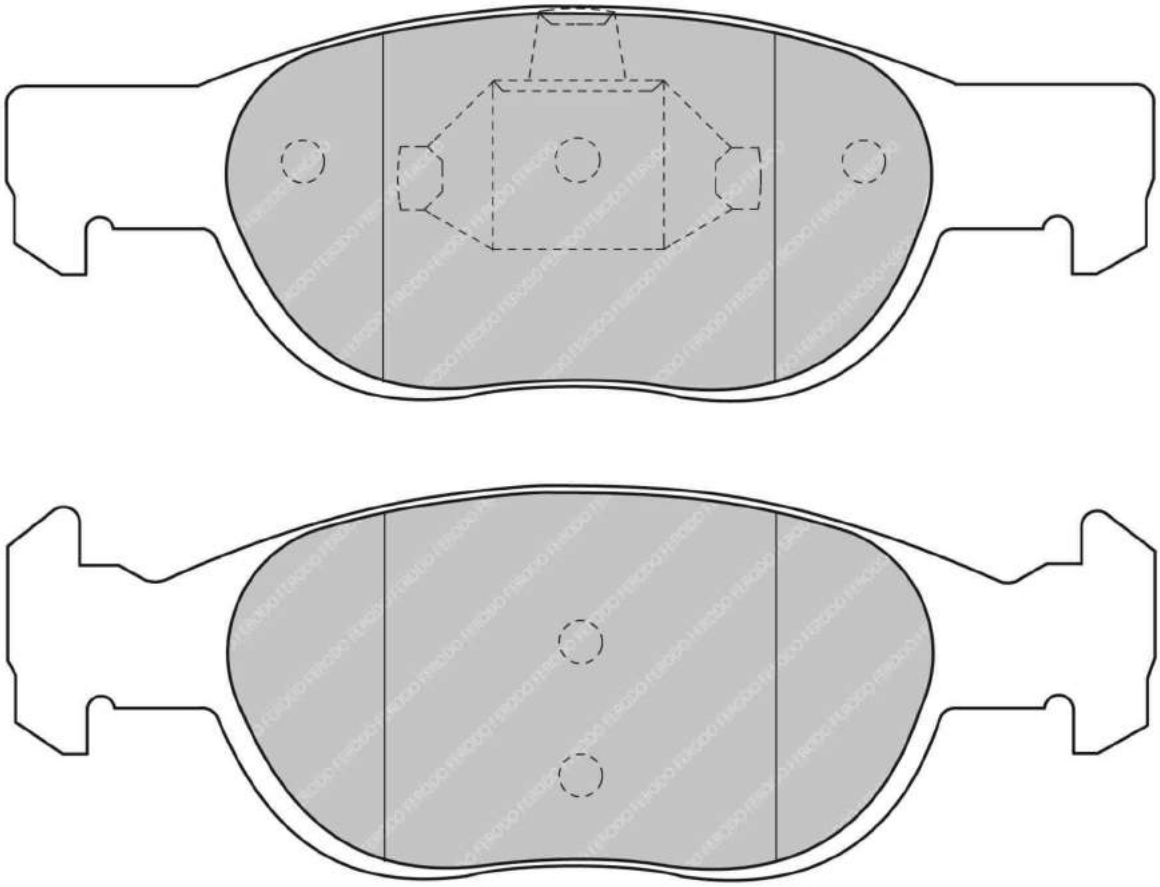

MATERIAL AVAILABILITY						
H	C	R	W	WB	Z	ZB
✔						

CROSS REFERENCE	
BREMBO	07.8301.59
MINTEX	MDB1828
MINTEX	MDB1956
MINTEX	MDB2206
WVA	21931 17,00

✔ Available
✖ Out of Range
In Introduction
Exhausting
Make to order

FERODO RACING

Updated on November 2020

FCP1162

WVA No: 21998 15,60


90.1mm = 3.547"

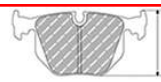
70.0mm = 2.756"


15.0mm = 0.591"


50.6mm = 1.992"

SMART (until 2002 MCC) Front

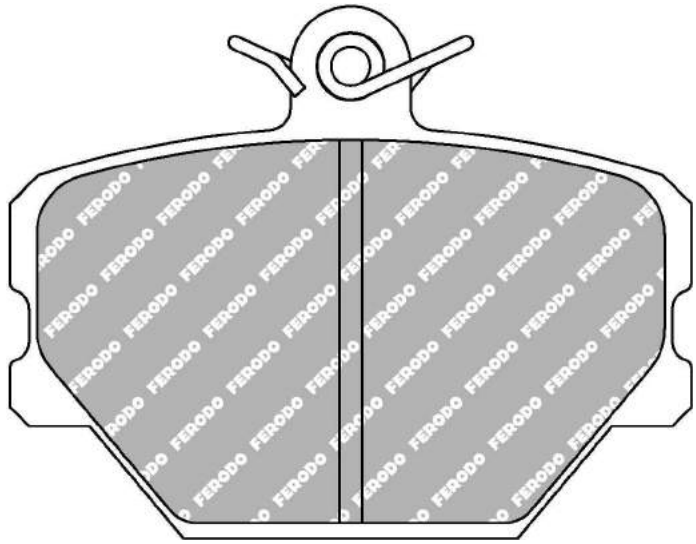

MATERIAL AVAILABILITY						
H	C	R	W	WB	Z	ZB
✔						

CROSS REFERENCE	
BREMBO	07.8301.60
MINTEX	MDB2033
WVA	21998 15,60

FERODO RACING

Updated on November 2020

Available
Out of Range
In Introduction
Exhausting
Make to order

FCP1213

FMSI No: D369



147.7mm = 5.815"
125.3mm = 4.933"

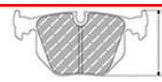

58.6mm = 2.307"
76.2mm = 3.000"



15.7mm = 0.618"
16.6mm = 0.654"



39.8mm = 1.567"
45.3mm = 1.783"

CADILLAC Front

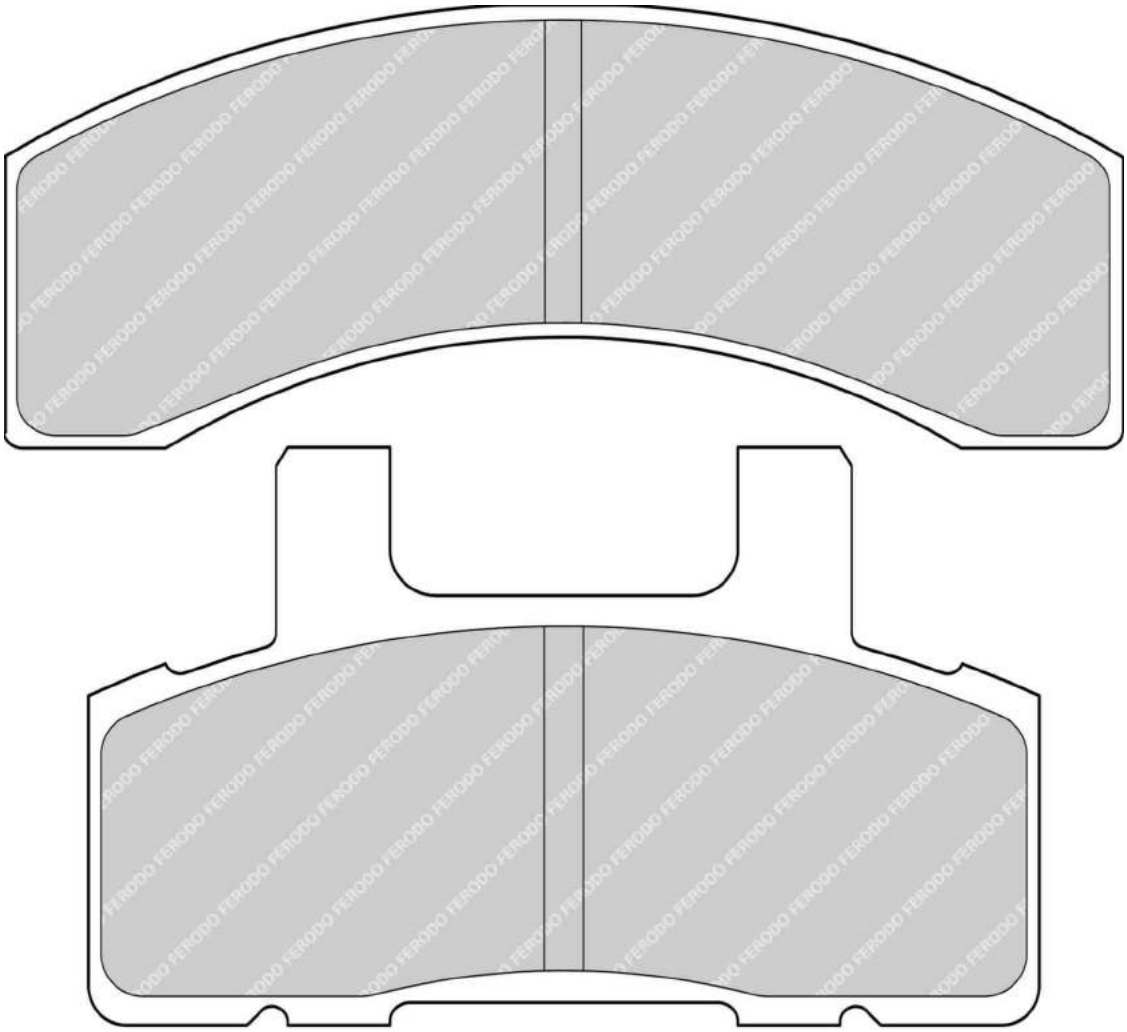

MATERIAL AVAILABILITY						
H	C	R	W	WB	Z	ZB

CROSS REFERENCE	
BREMBO	07.8300.24
FMSI	D369
HAWK	HB332 0,654
PFC	0369.XX

Available
Out of Range
In Introduction
Exhausting
Make to order

FERODO RACING

Updated on November 2020

FCP1280


107.9mm = 4.248"

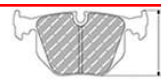
46.0mm = 1.811"


15.3mm = 0.602"


43.5mm = 1.713"

MITSUBISHI Rear

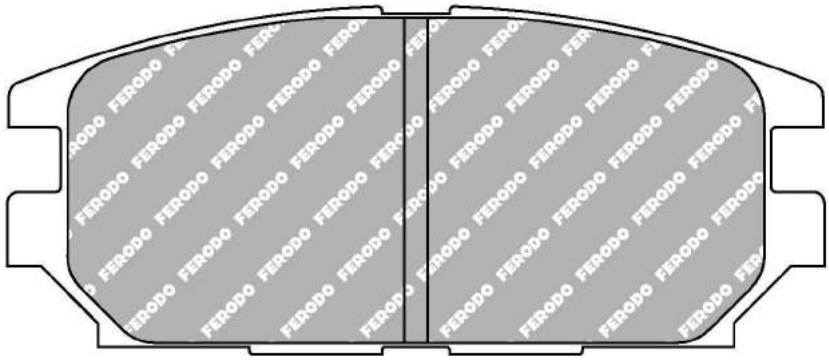

MATERIAL AVAILABILITY						
H	C	R	W	WB	Z	ZB
✔		✔	✉			

CROSS REFERENCE	
ALCON	PNF0084X232.4
MINTEX	MDB1693
PAGID	2445

FERODO RACING

Updated on November 2020

✔ Available
✖ Out of Range
In Introduction
Exhausting
Make to order

FCP1281


131.8mm = 5.189"

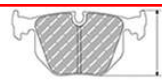
67.0mm = 2.638"


18.0mm = 0.709"


51.7mm = 2.035"

FMSI No: D810

AUDI Rear, BMW Rear, LAMBORGHINI Rear, NISSAN Rear

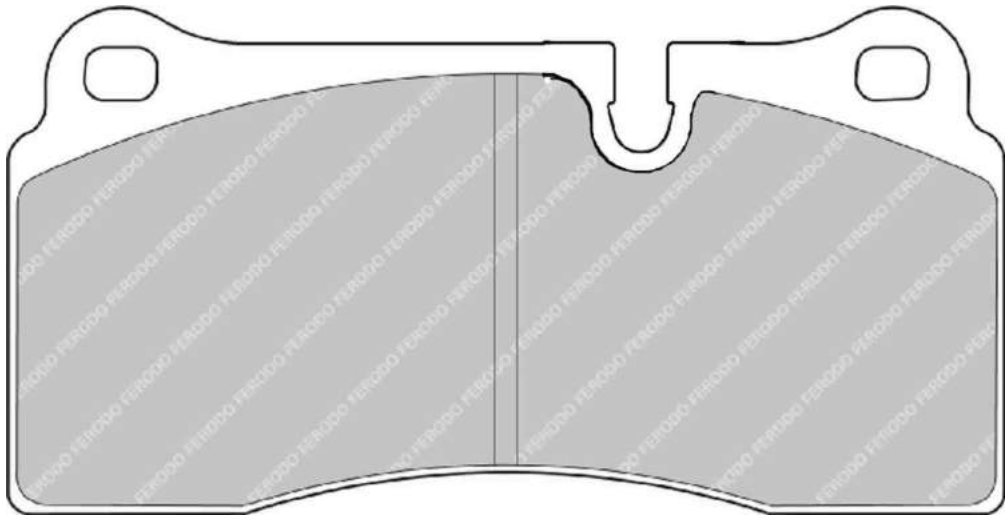

ALSO AVAILABLE		
SHAPE	TH. MM	NOTES
FRP3028	16	

MATERIAL AVAILABILITY						
H	C	R	W	WB	Z	ZB
✔		✔	✔			

CROSS REFERENCE	
ALCON	PNF0084X233.4
AP RACING	780
BREMBO	07.4865.1
BREMBO	07.4865.80
BREMBO	07.8301.61
BREMBO	07.8645.16
BREMBO	07.B314.30
CL BRAKES	5008W52T18
FMSI	D810
FMSI	D968
HAWK	HB193 0,67
MINTEX	MTX1976
PAGID	1287
PFC	7780.XX.18
Raybestos	DR770
Raybestos	DR780
SBS	3038
Wilwood	5518

FCP1283


99.0mm = 3.898"


38.0mm = 1.496"


14.3mm = 0.563"


35.0mm = 1.378"

MITSUBISHI Rear

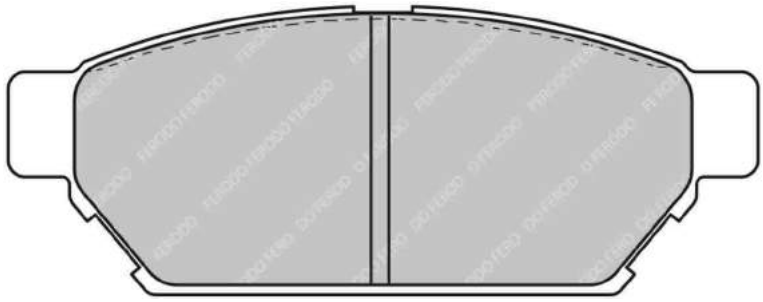

MATERIAL AVAILABILITY						
H	C	R	W	WB	Z	ZB
		✔				

CROSS REFERENCE	
ALCON	PNF0084X236.4
PAGID	1897

FERODO RACING

Updated on November 2020

✔ Available
✖ Out of Range
In Introduction
Exhausting
Make to order

FCP1285

WVA No: 21273 19,50
FMSI No: D618


156.4mm = 6.157"
156.4mm = 6.157"

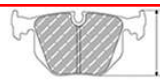
58.7mm = 2.311"
58.7mm = 2.311"


18.8mm = 0.740"
18.8mm = 0.740"


51.6mm = 2.031"
51.6mm = 2.031"

VOLVO Front

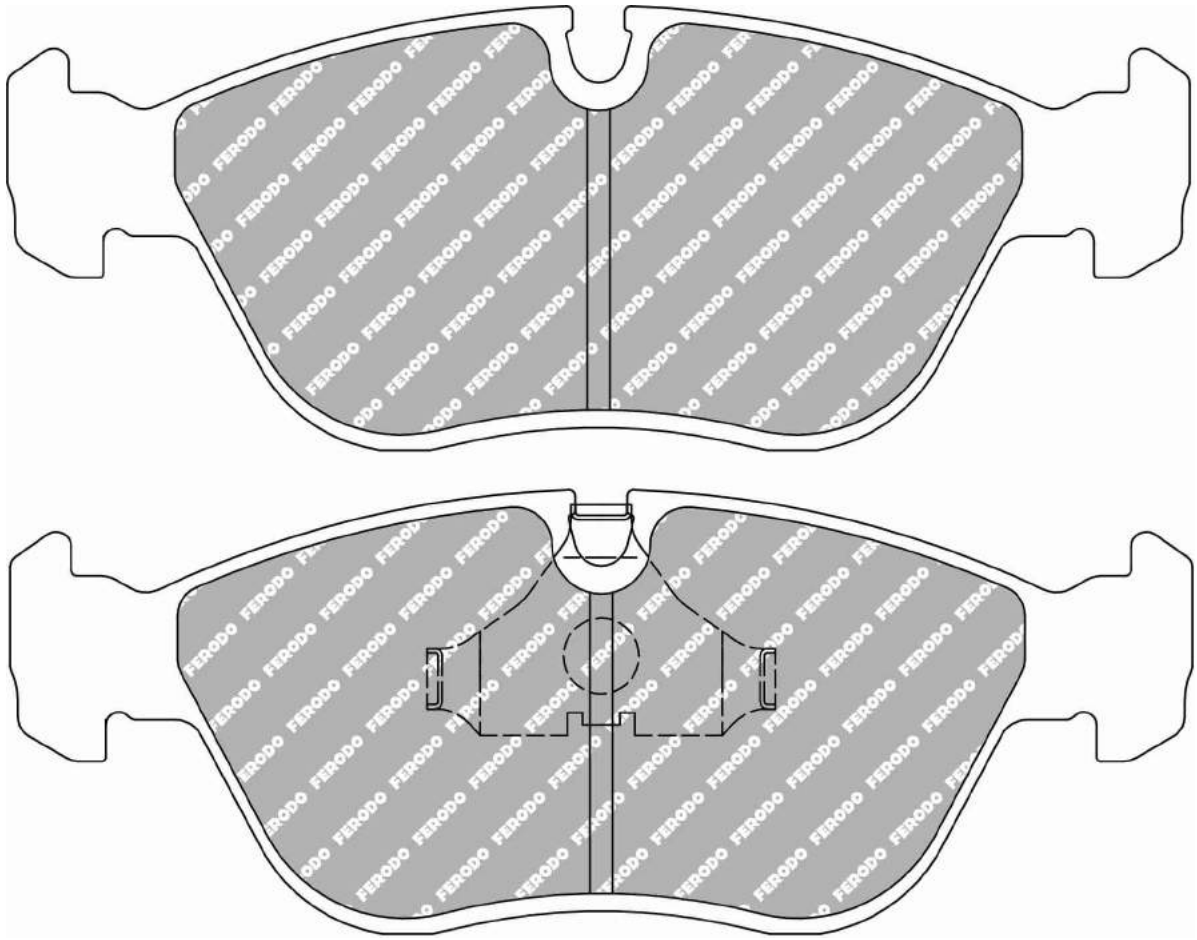

MATERIAL AVAILABILITY						
H	C	R	W	WB	Z	ZB
✔		✔				

CROSS REFERENCE	
FMSI	D618
HAWK	HB492 0,732
MINTEX	MDB1614
MINTEX	MDB1984
WVA	21273 19,50

✔ Available
✖ Out of Range
In Introduction
Exhausting
Make to order

FERODO RACING

Updated on November 2020

FCP1288

WVA No: 21866 15,30



141.8mm = 5.583"
141.8mm = 5.583"

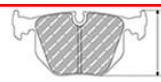

50.0mm = 1.969"
51.0mm = 2.008"



15.3mm = 0.602"
15.3mm = 0.602"



45.0mm = 1.772"
45.0mm = 1.772"

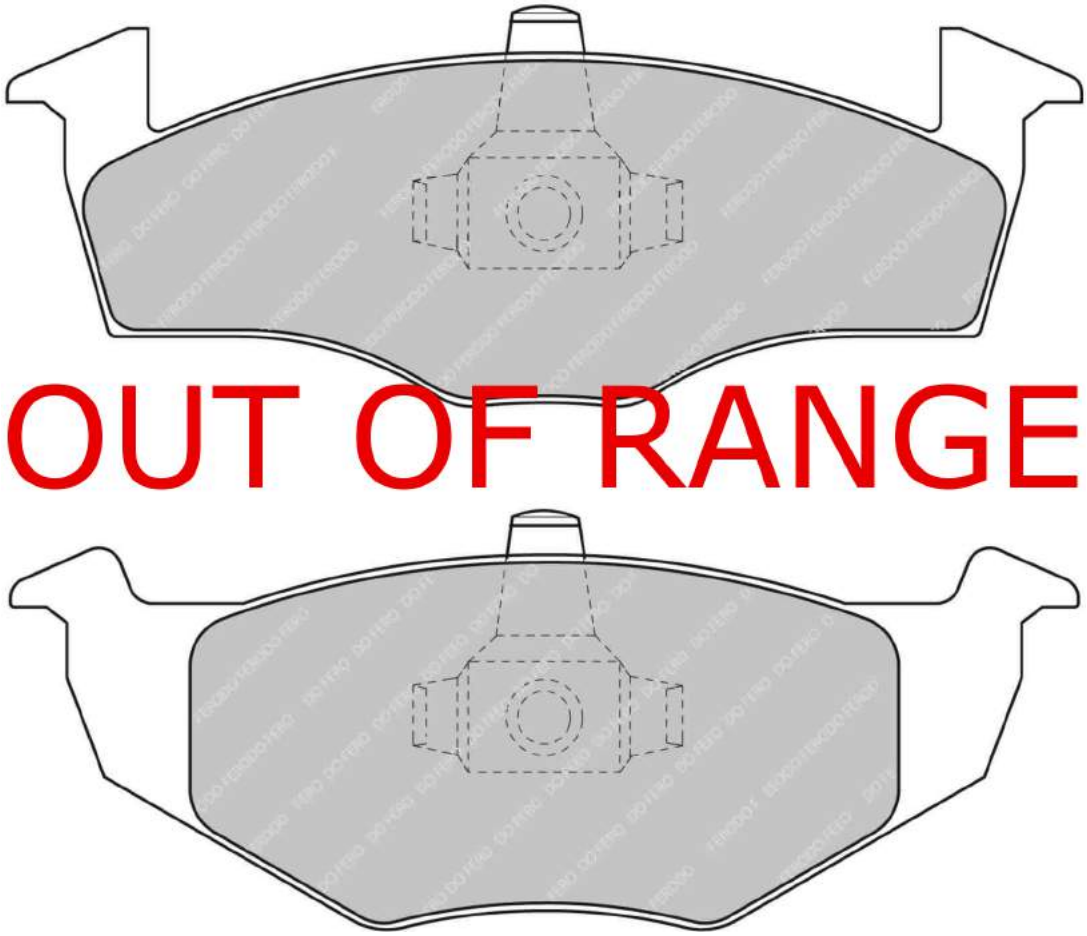

October 2019: Out of range

MATERIAL AVAILABILITY						
H	C	R	W	WB	Z	ZB

CROSS REFERENCE	
BREMBO	07.8301.62
MINTEX	MDB1872
WVA	21866 15,30

FERODO RACING

Updated on November 2020

Available
Out of Range
In Introduction
Exhausting
Make to order

FCP1289

WVA No: 21945 19,90

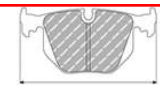
119.0mm = 4.685"

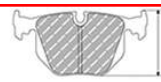
69.0mm = 2.717"


19.9mm = 0.783"


47.5mm = 1.870"

AUDI Front, SEAT Front, VOLKSWAGEN Front

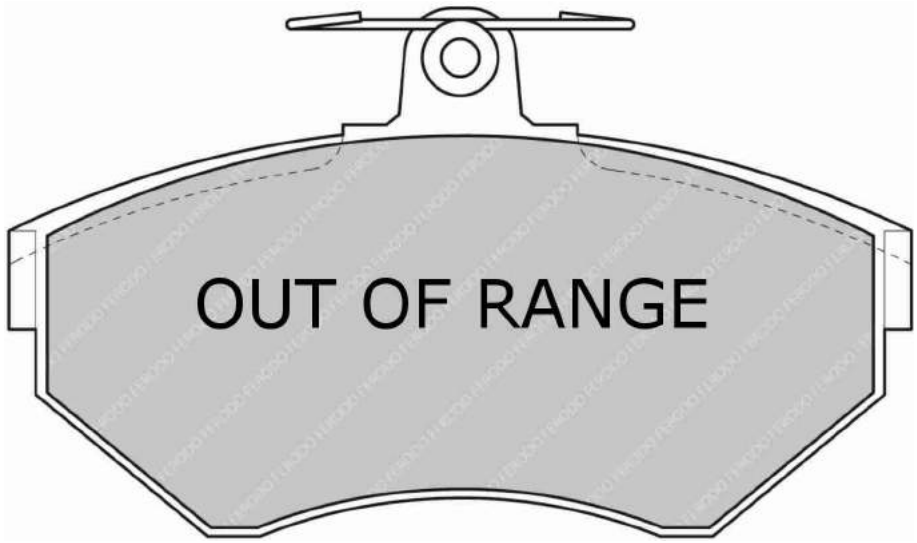

ALSO AVAILABLE		
SHAPE	TH. MM	NOTES
FCP1312	16	

CROSS REFERENCE	
MINTEX	MDB1919
WVA	21945 19,90

MATERIAL AVAILABILITY						
H	C	R	W	WB	Z	ZB
✖						

Available
Out of Range
In Introduction
Exhausting
Make to order

FERODO RACING

Updated on November 2020

FCP1293

WVA No: 23063 18,40



160.1mm = 6.303"
177.7mm = 6.996"

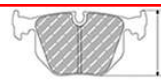

63.1mm = 2.484"
62.5mm = 2.461"



17.5mm = 0.689"
18.8mm = 0.740"



45.6mm = 1.795"
45.6mm = 1.795"

CHEVROLET Front, OPEL Front, VAUXHALL Front

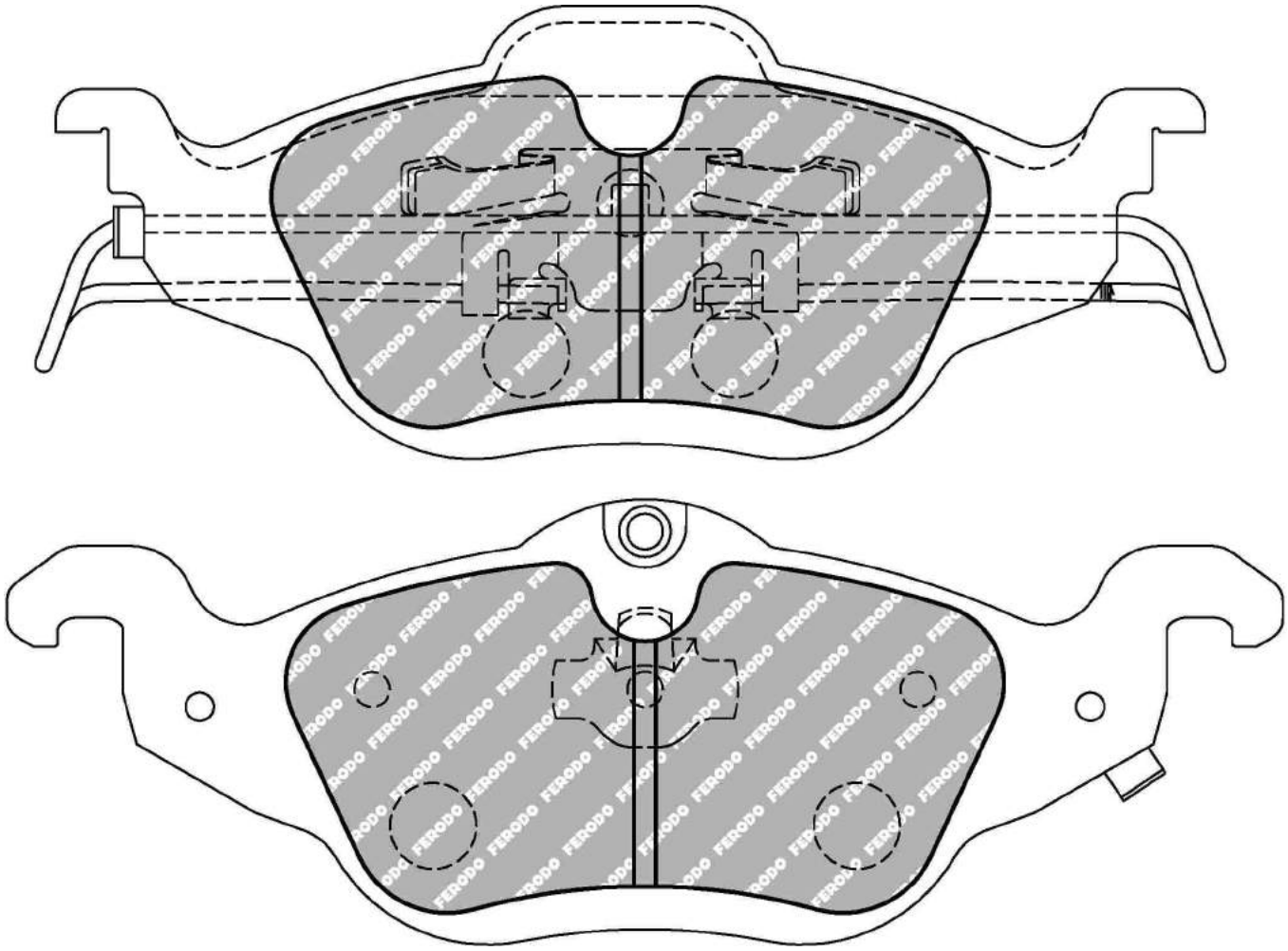

MATERIAL AVAILABILITY						
H	C	R	W	WB	Z	ZB
✔						

CROSS REFERENCE	
BREMBO	07.8301.64
MINTEX	MDB1908
WVA	23063 18,40

FERODO RACING

Updated on November 2020

✔ Available
✖ Out of Range
In Introduction
Exhausting
Make to order

FCP1294

WVA No: 23052 16,20


104.9mm = 4.130"

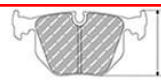
42.5mm = 1.673"


16.3mm = 0.642"


37.8mm = 1.488"

OPEL Rear, VAUXHALL Rear

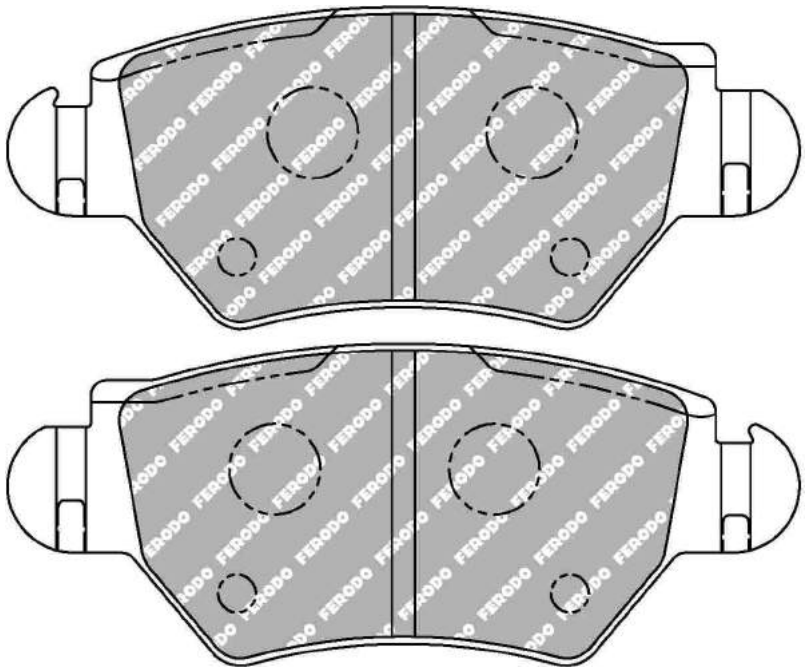

MATERIAL AVAILABILITY						
H	C	R	W	WB	Z	ZB

CROSS REFERENCE	
MINTEX	MDB2130
WVA	23052 16,20

Available
Out of Range
In Introduction
Exhausting
Make to order

FERODO RACING

Updated on November 2020

FCP1295

WVA No: 23057 20,00



155.5mm = 6.122"
156.5mm = 6.161"

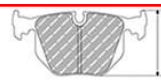

71.4mm = 2.811"
78.5mm = 3.091"



19.4mm = 0.764"
19.4mm = 0.764"



56.7mm = 2.232"
56.7mm = 2.232"

CHEVROLET Front, OPEL Front, VAUXHALL Front

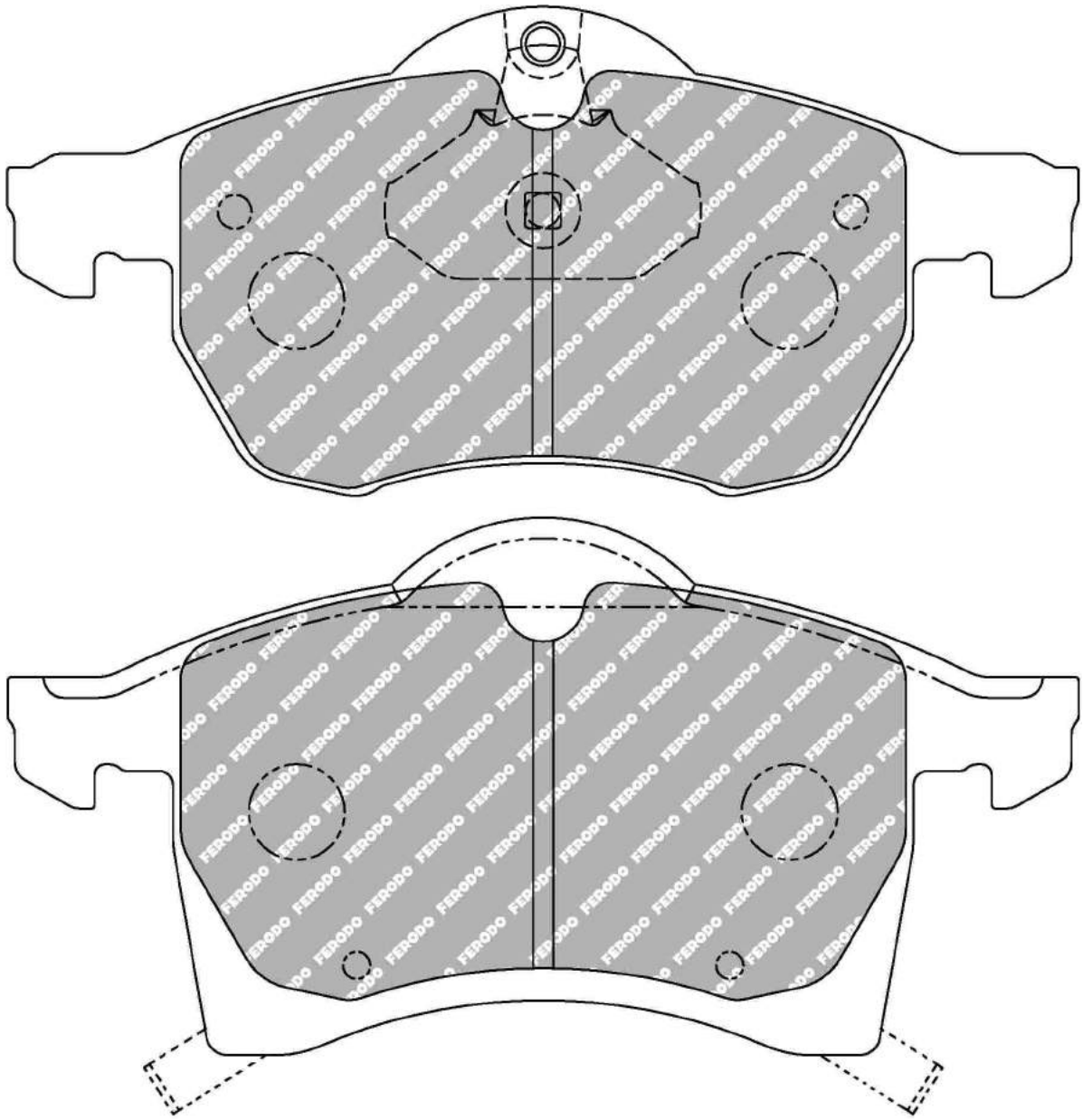

MATERIAL AVAILABILITY						
H	C	R	W	WB	Z	ZB
✔						

CROSS REFERENCE	
BREMBO	07.8301.65
MINTEX	MDB1907
WVA	23057 20,00

FERODO RACING

Updated on November 2020

Available
Out of Range
In Introduction
Exhausting
Make to order

FCP1298


119.8mm = 4.717"

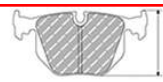
73.7mm = 2.902"


18.0mm = 0.709"


55.6mm = 2.189"

FMSI No: D639

BMW Front, FERRARI Front / Rear, FIAT Front, MASERATI Front, NISSAN Front

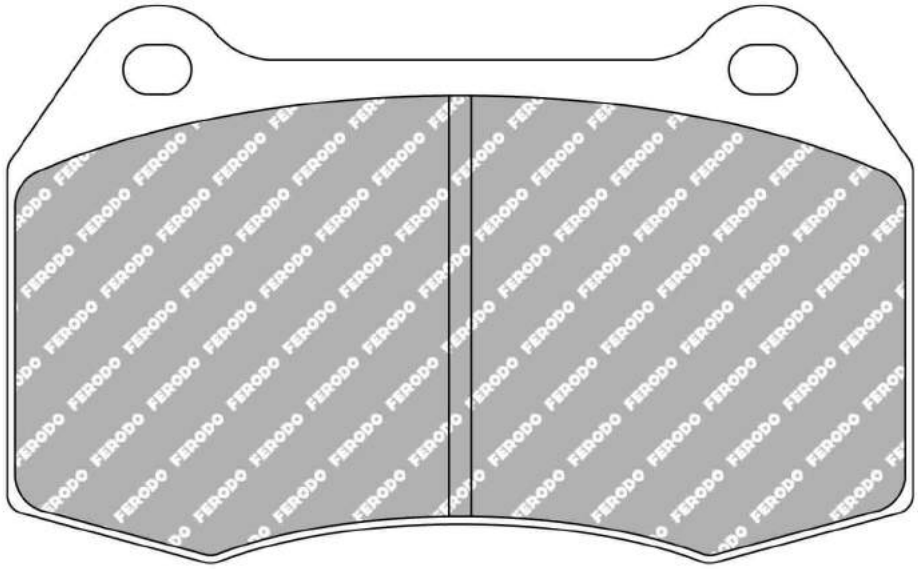

Replacing FCP998

MATERIAL AVAILABILITY						
H	C	R	W	WB	Z	ZB
✔		✔	✉		✉	

CROSS REFERENCE	
AP RACING	639
BREMBO	07.9184.45
CL BRAKES	4061
FMSI	D639
HAWK	HB181 0,66
MINTEX	MDB1752
PAGID	1427
PFC	0639
Raybestos	DR639
Wilwood	D639

✔ Available
✖ Out of Range
In Introduction
Exhausting
Make to order

FERODO RACING

Updated on November 2020

FCP1300

WVA No: 21925 17,80
FMSI No: D781


151.4mm = 5.961"

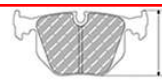
57.5mm = 2.264"


16.9mm = 0.665"


52.4mm = 2.063"

BMW Front

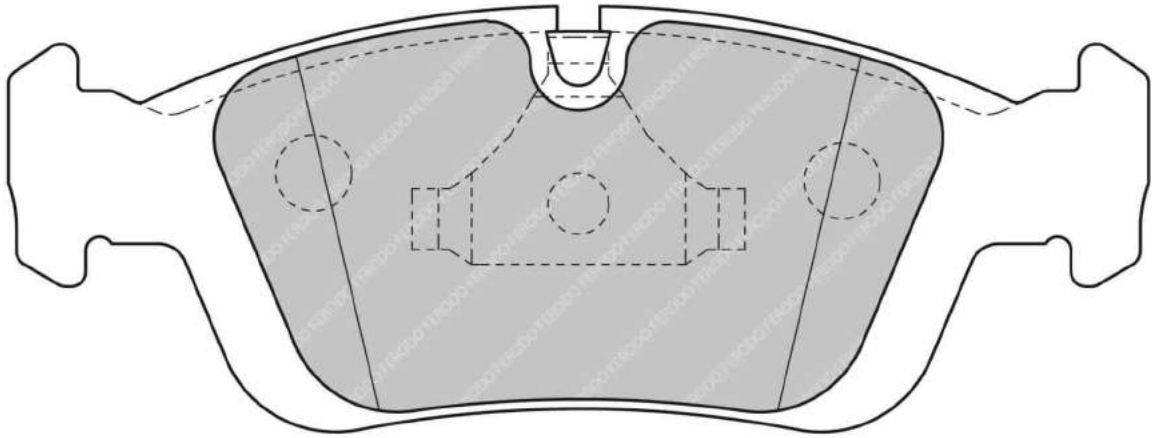

MATERIAL AVAILABILITY						
H	C	R	W	WB	Z	ZB
✓						

CROSS REFERENCE	
CL BRAKES	4104
FMSI	D781
HAWK	HB546 0,654
MINTEX	MDB1901
PAGID	2180
WVA	21925 17,80

FCP1301

WVA No: 21934 17,30
FMSI No: D692


123.2mm = 4.850"

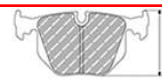
43.7mm = 1.720"


16.6mm = 0.654"


39.7mm = 1.563"

BMW Rear

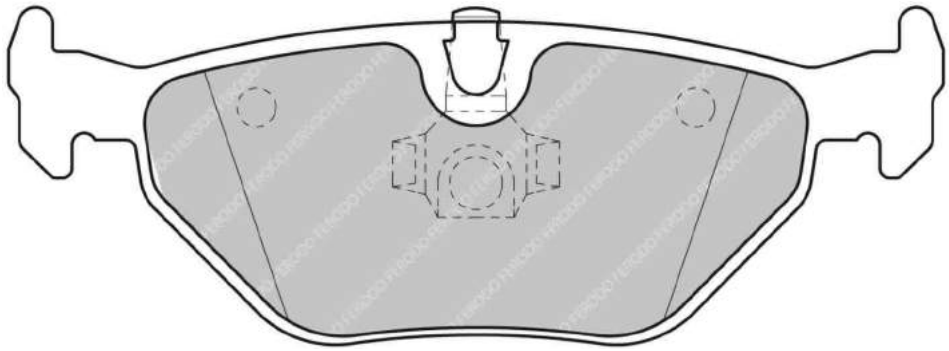

MATERIAL AVAILABILITY						
H	C	R	W	WB	Z	ZB
✓		✉				

CROSS REFERENCE	
FMSI	D692
MINTEX	MDB1888
MINTEX	MDB2763
WVA	21934 17,30

FERODO RACING
Updated on November 2020

✓ Available
✗ Out of Range
In Introduction
Exhausting
Make to order

FCP1307

WVA No: 21937 16,20
FMSI No: D737


114.0mm = 4.488"

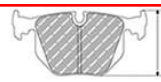
78.3mm = 3.083"


15.4mm = 0.606"


54.0mm = 2.126"

PORSCHE Front

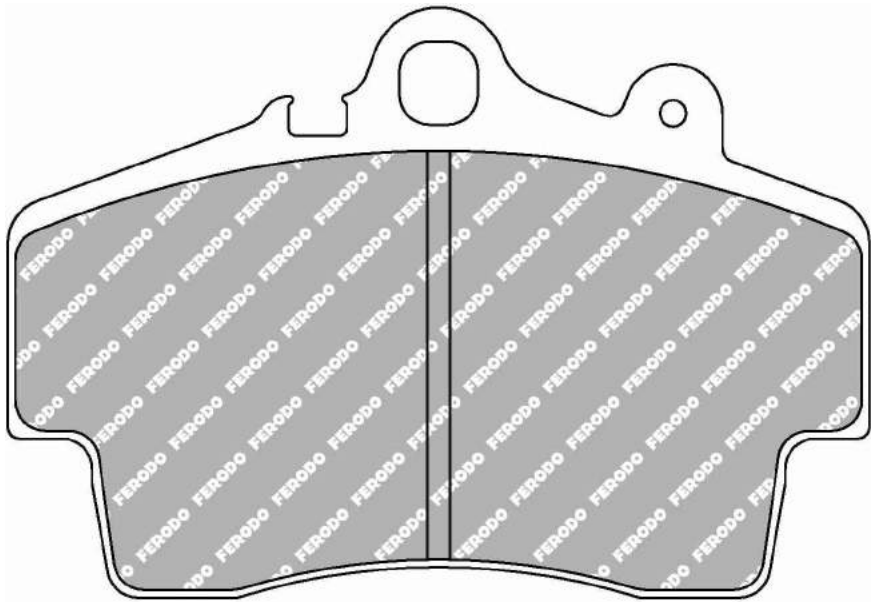

MATERIAL AVAILABILITY						
H	C	R	W	WB	Z	ZB
✔		✔	✔			

CROSS REFERENCE	
FMSI	D737
HAWK	HB289 0,61
MINTEX	MDB1873
PAGID	2407
PAGID	T5124
PFC	0738
WVA	21937 16,20

FCP1308

WVA No: 21972 15,20
FMSI No: D738


112.2mm = 4.417"

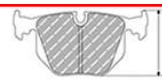
73.0mm = 2.874"


15.5mm = 0.610"


48.0mm = 1.890"

AUDI Rear, PORSCHE Rear, VOLKSWAGEN Rear

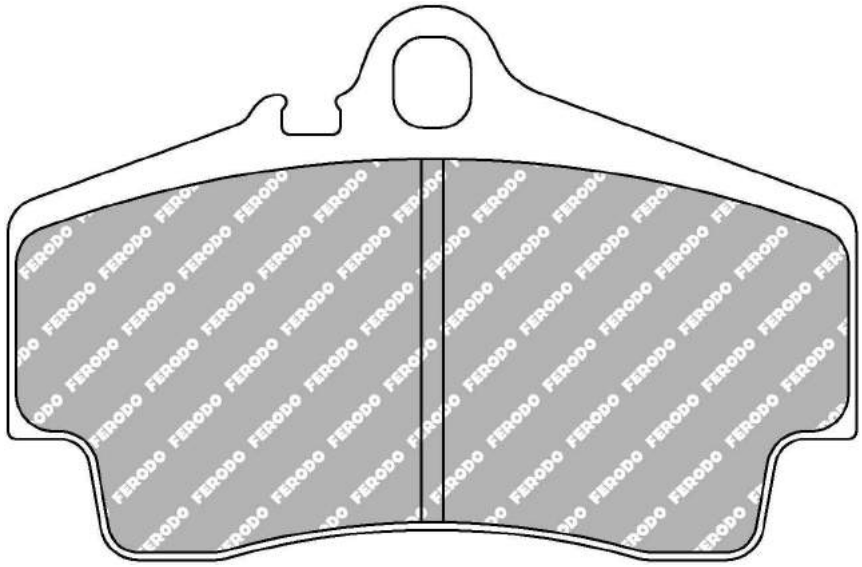

MATERIAL AVAILABILITY						
H	C	R	W	WB	Z	ZB
✔		✔	✔			

CROSS REFERENCE	
CL BRAKES	4049
FMSI	D738
FMSI	D978
HAWK	HB290 0,583
MINTEX	MDB1874
PAGID	2406
PAGID	T1698
PAGID	T5125
PFC	0738
WVA	21972 15,20
WVA	23694

FERODO RACING
Updated on November 2020

Available
Out of Range
In Introduction
Exhausting
Make to order

FCP1312

WVA No: 21945 16,00


119.0mm = 4.685"

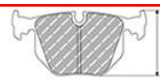
69.0mm = 2.717"


16.0mm = 0.630"


47.2mm = 1.858"

SEAT Front, VOLKSWAGEN Front / Rear

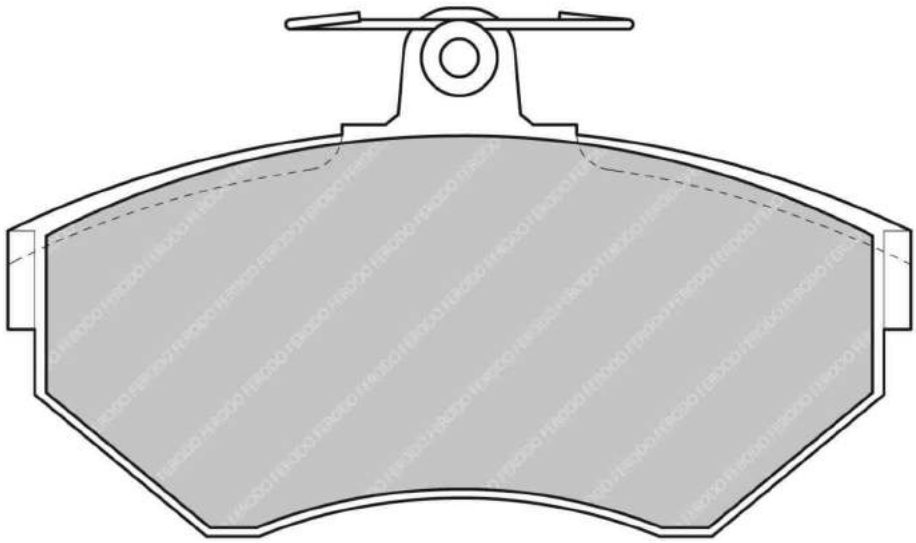

ALSO AVAILABLE		
SHAPE	TH. MM	NOTES
FCP1289	19.9	

CROSS REFERENCE	
MINTEX	MDB1868
WVA	21945 16,00

MATERIAL AVAILABILITY						
H	C	R	W	WB	Z	ZB
✔					✉	

✔ Available
✖ Out of Range
In Introduction
Exhausting
Make to order

FERODO RACING

Updated on November 2020

FCP1318

WVA No: 23154 19,00
FMSI No: D816


177.9mm = 7.004"

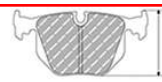
60.8mm = 2.394"


19.0mm = 0.748"


44.8mm = 1.764"

FORD Front, FORD USA Front

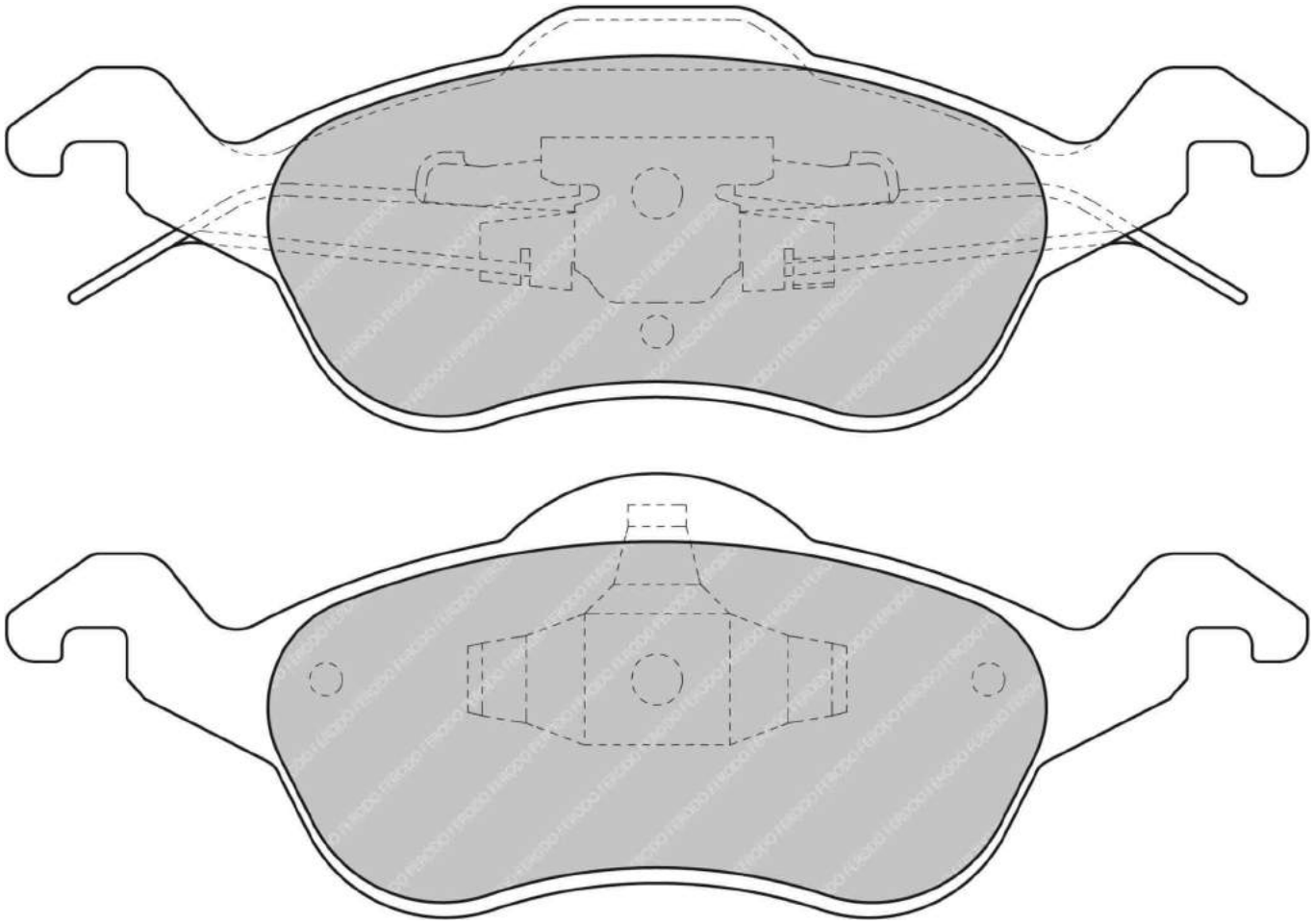

MATERIAL AVAILABILITY						
H	C	R	W	WB	Z	ZB
✔		✉				

CROSS REFERENCE	
BREMBO	07.8301.72
FMSI	D816
HAWK	HB346 0,713
MINTEX	MDB1958
PFC	0816.XX
WVA	23154 19,00

FERODO RACING

Updated on November 2020

✔ Available
✖ Out of Range
In Introduction
Exhausting
Make to order

FCP1319

WVA No: 23353 14,70
FMSI No: D886


87.7mm = 3.453"

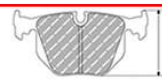
42.6mm = 1.677"


14.9mm = 0.587"


34.9mm = 1.374"

FORD Rear

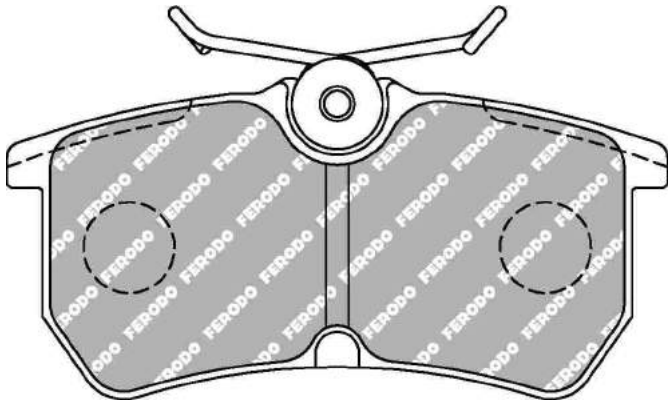

MATERIAL AVAILABILITY						
H	C	R	W	WB	Z	ZB
✔						

CROSS REFERENCE	
FMSI	D886
HAWK	HB430 0,547
MINTEX	MDB1959
WVA	23353 14,70

FCP1323

WVA No: 21938 20,40
FMSI No: D840


156.5mm = 6.161"

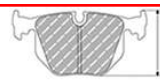
74.0mm = 2.913"


21.3mm = 0.839"


61.0mm = 2.402"

AUDI Front, VOLKSWAGEN Front

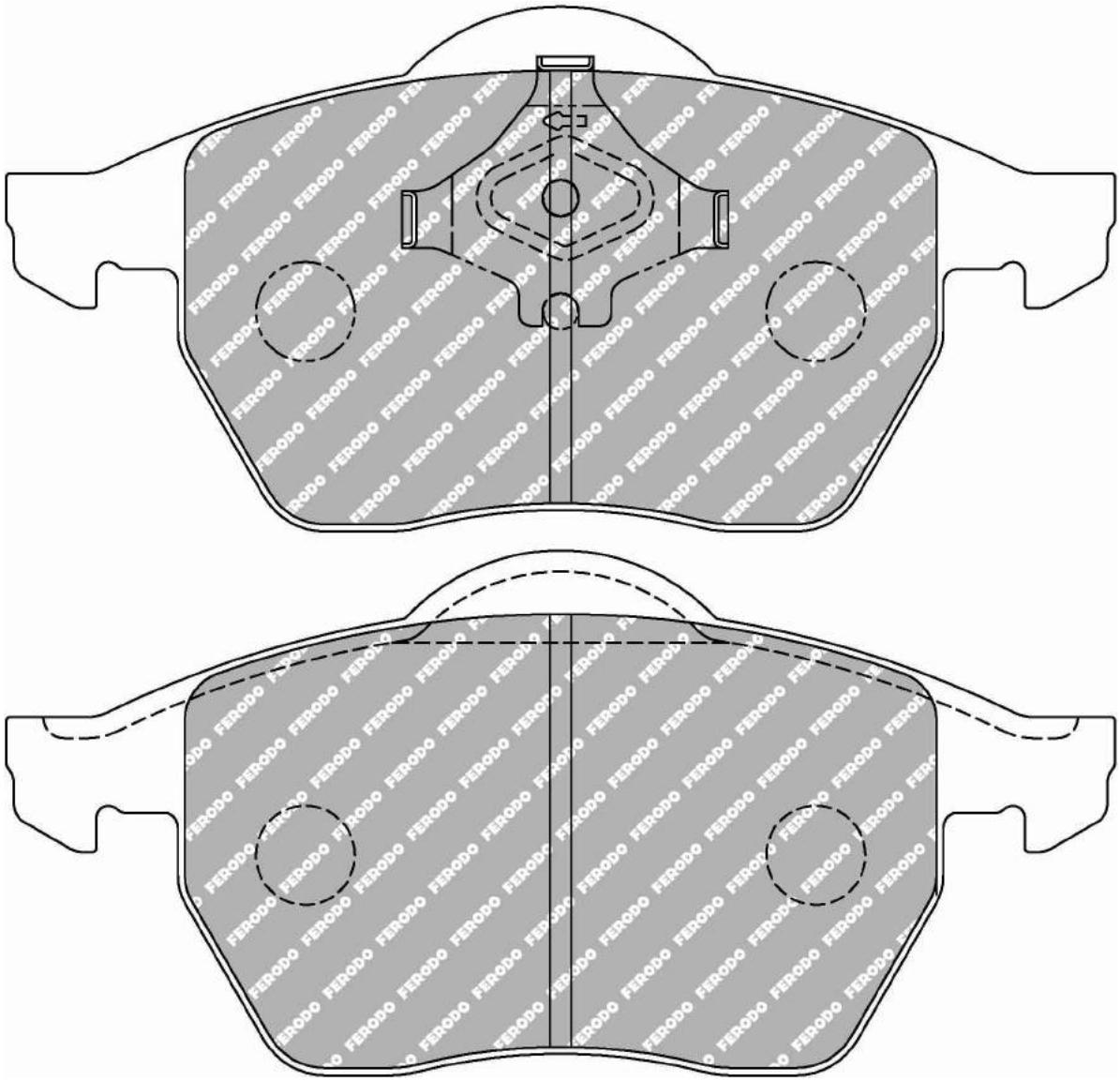

MATERIAL AVAILABILITY						
H	C	R	W	WB	Z	ZB
✔						

CROSS REFERENCE	
CL BRAKES	4023
FMSI	D840
HAWK	HB354 .756A
MINTEX	MDB1826
WVA	21938 20,40

FERODO RACING
Updated on November 2020

Available
Out of Range
In Introduction
Exhausting
Make to order

FCP1324

WVA No: 23601 16,70


95.8mm = 3.772"

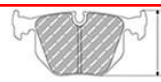
44.0mm = 1.732"


13.9mm = 0.547"


41.7mm = 1.642"

ABARTH Rear, FIAT Rear, LANCIA Rear

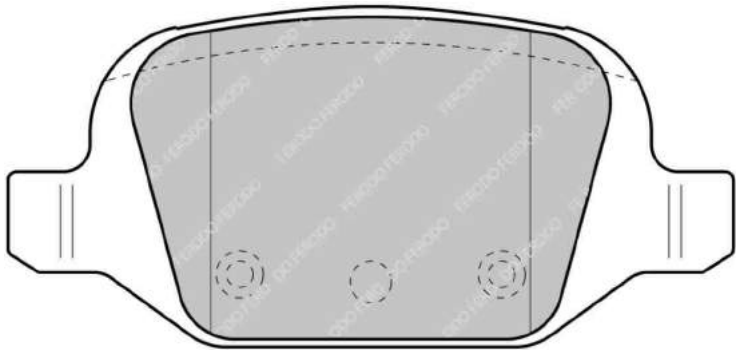

PIN 5mm on the backplate

MATERIAL AVAILABILITY						
H	C	R	W	WB	Z	ZB
✔						

CROSS REFERENCE	
MINTEX	MDB2042
WVA	23601 16,70

FCP1327

WVA No: 23558 17,80

FMSI No: D721


138.0mm = 5.433"

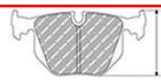
59.8mm = 2.354"


17.0mm = 0.669"

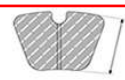
50.0mm = 1.969"

SUBARU Front

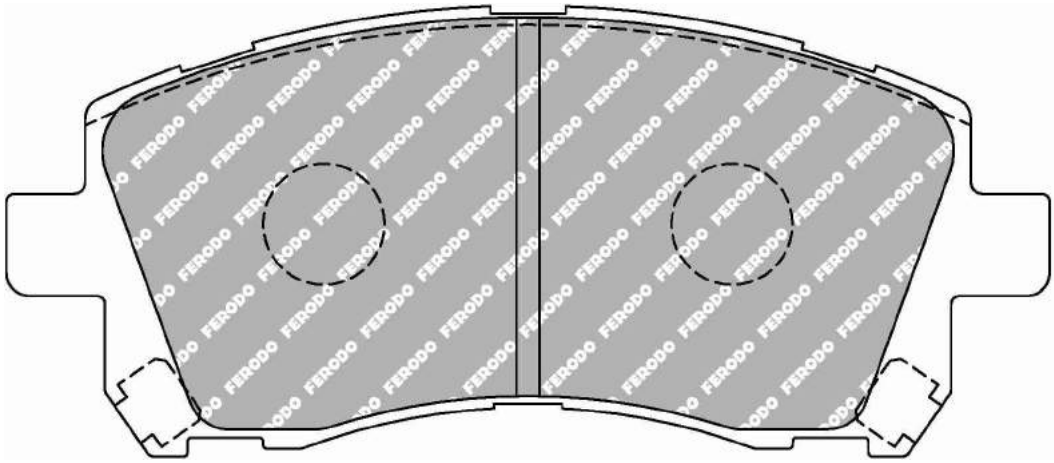

MATERIAL AVAILABILITY						
H	C	R	W	WB	Z	ZB
✔		✉				

CROSS REFERENCE	
BREMBO	07.8300.42
CL BRAKES	4029
FMSI	D721
HAWK	HB352 0,665
MINTEX	MDB1794
PAGID	ERS651
WVA	23558 17,80

FCP1333

WVA No: 23572 14,40
FMSI No: D770


108.4mm = 4.268"

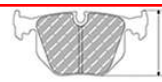
41.9mm = 1.650"


14.0mm = 0.551"


34.0mm = 1.339"

SUBARU Rear

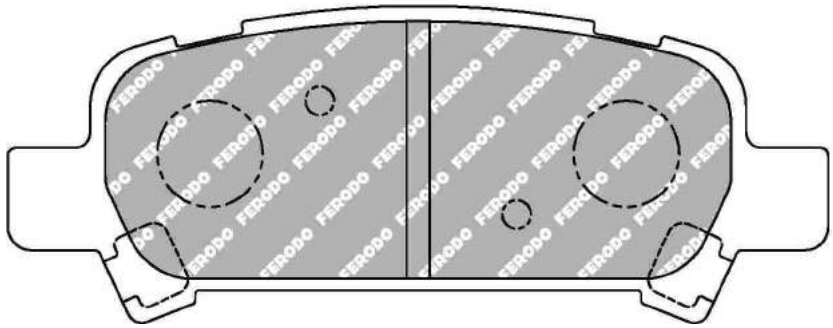

MATERIAL AVAILABILITY						
H	C	R	W	WB	Z	ZB
✔		✔				

CROSS REFERENCE	
CL BRAKES	4059
FMSI	D770
HAWK	HB434 0,543
MINTEX	MDB1999
WVA	23572 14,40

FERODO RACING
Updated on November 2020

Available
Out of Range
In Introduction
Exhausting
Make to order

FCP1334

WVA No: 23092 16,00
FMSI No: D1001


131.8mm = 5.189"

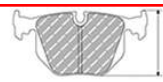
77.2mm = 3.039"


16.0mm = 0.630"


61.0mm = 2.402"

ALFA ROMEO Front, AUDI Front, CADILLAC Front, CHEVROLET Front, CITROEN Front, FORD Front, LANCIA Front, LAND ROVER Front, MASERATI Front, MITSUBISHI Front, OPEL Front, RENAULT Front, SEAR Front, VOLKSWAGEN Front, VOLVO Front

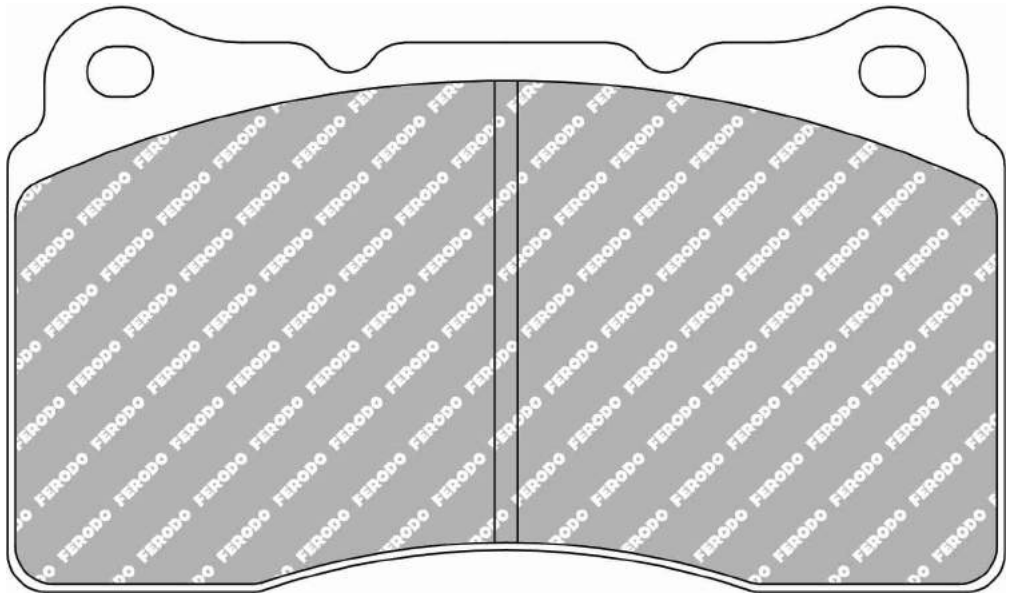

ALSO AVAILABLE		
SHAPE	TH. MM	NOTES
FRP3067	14.7	

MATERIAL AVAILABILITY						
H	C	R	W	WB	Z	ZB
✔		✔	✔		✔	

CROSS REFERENCE	
ALCON	PNF0084X268.4
ALCON	PNF0084X359.4
BREMBO	07.7275.68
BREMBO	07.8301.74
CL BRAKES	4066
FMSI	D1001
FMSI	D1016
FMSI	D1050
HAWK	HB453 0,585
MINTEX	MDB1859
MINTEX	MDB1950
PAGID	2487
PFC	7781
WVA	23092 16,00

FCP1348

WVA No: 21381 15,00
FMSI No: D592


109.8mm = 4.323"

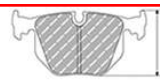
69.0mm = 2.717"


15.0mm = 0.591"


51.3mm = 2.020"

CHEVROLET Front / Rear, CITROEN Front, FERRARI Front / Rear, FORD Front, MASERATI Rear, PEUGEOT Front, RENAULT Front / Rear, SEAT Front, TESLA Rear, VOLVO Rear

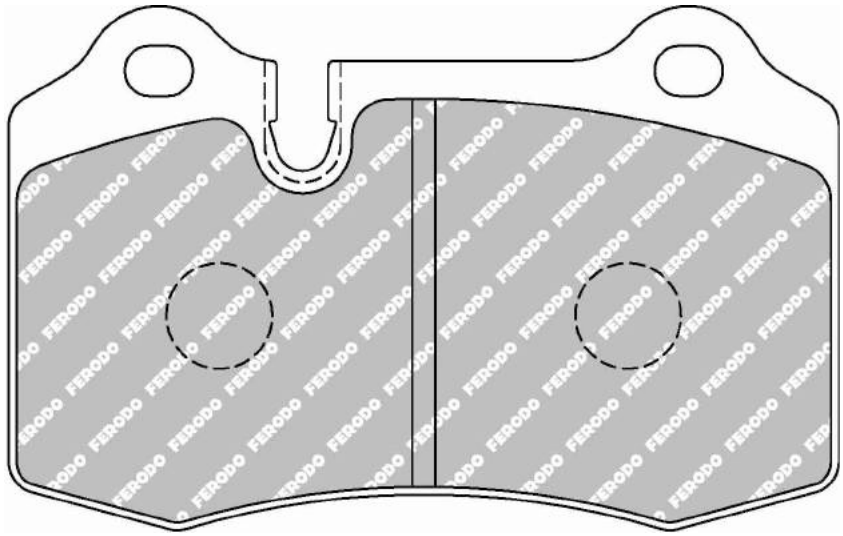

ALSO AVAILABLE		
SHAPE	TH. MM	NOTES
FCP721	17.3	
FRP3109	12.5	

MATERIAL AVAILABILITY						
H	C	R	W	WB	Z	ZB
✔		✔	✔		✔	

CROSS REFERENCE	
BREMBO	07.5146.30
BREMBO	07.5146.31
BREMBO	07.6953.9
BREMBO	07.8720.XX
FMSI	D592
HAWK	HB194
MINTEX	1968
MINTEX	MDB1968
MINTEX	MDB2221
PAGID	1408
PFC	0592.XX.15
Raybestos	DR592
Wilwood	D592
WVA	21381 15,00

FERODO RACING

Updated on November 2020

✔ Available
✖ Out of Range
In Introduction
Exhausting
Make to order

FCP1349

WVA No: 23517 16,60


95.8mm = 3.772"

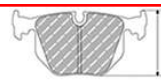
44.0mm = 1.732"


16.6mm = 0.654"


41.7mm = 1.642"

ALFA ROMEO Rear, FIAT Rear, LANCIA Rear

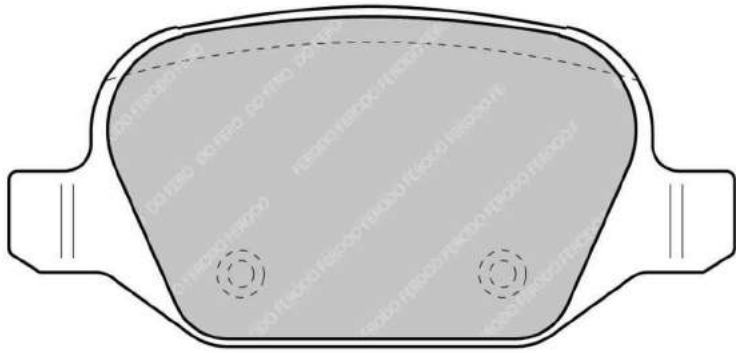

MATERIAL AVAILABILITY						
H	C	R	W	WB	Z	ZB
✔		✉				

CROSS REFERENCE	
MINTEX	MDB2051
WVA	23517 16,60

FCP1368

WVA No: 23348 16,50


112.4mm = 4.425"

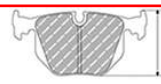
46.3mm = 1.823"


16.5mm = 0.650"


40.7mm = 1.602"

TOYOTA Front

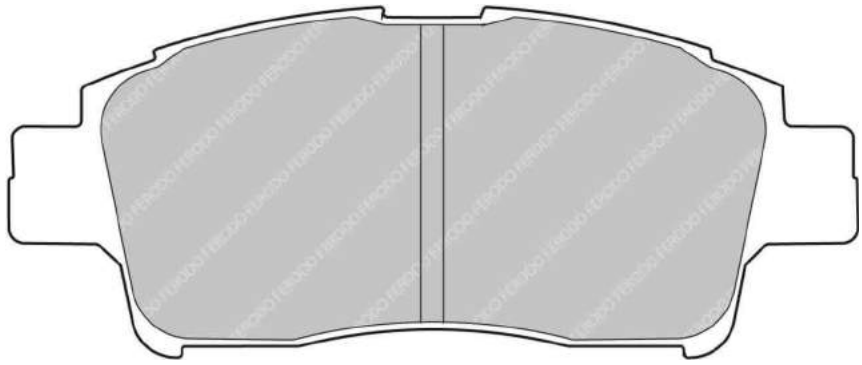

MATERIAL AVAILABILITY						
H	C	R	W	WB	Z	ZB
✔		✖				

CROSS REFERENCE	
BREMBO	07.8301.76
MINTEX	MDB2006
WVA	23348 16,50

FCP1370

WVA No: 23332 18,00


131.2mm = 5.165"

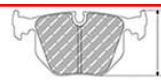
51.2mm = 2.016"


17.4mm = 0.685"


43.5mm = 1.713"

CITROEN Front, PEUGEOT Front

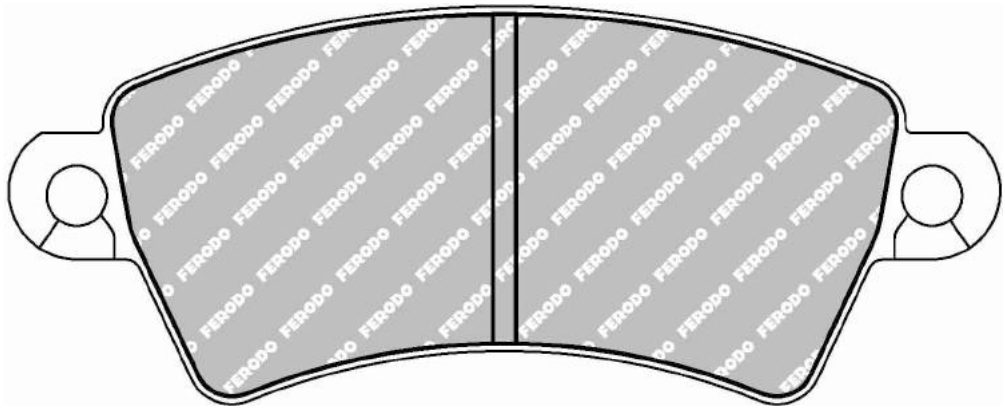

MATERIAL AVAILABILITY						
H	C	R	W	WB	Z	ZB
✔		✔				

CROSS REFERENCE	
MINTEX	MDB2012
WVA	23332 18,00

FCP1372


73.3mm = 2.886"


55.0mm = 2.165"


15.0mm = 0.591"


36.5mm = 1.437"

FMSI No: D461

SUBARU Rear

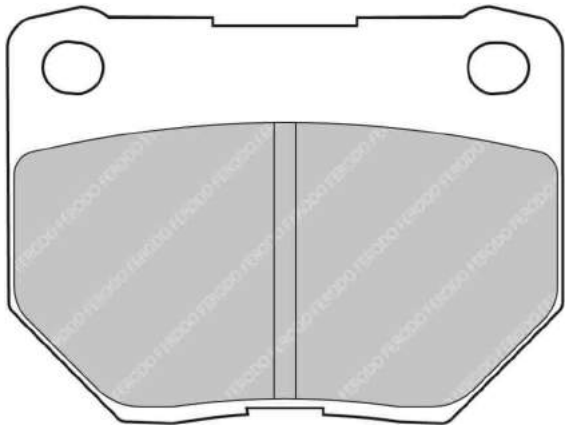

MATERIAL AVAILABILITY						
H	C	R	W	WB	Z	ZB
✔		✔				

CROSS REFERENCE	
ALCON	PNF0084X298.4
CL BRAKES	4069
FMSI	D461
HAWK	HB179 0,63
MINTEX	MDB2562
PFC	0461
PFC	0461.XX

FERODO RACING

Updated on November 2020

Available
Out of Range
In Introduction
Exhausting
Make to order

FCP1376

WVA No: 23552 17,80



150.3mm = 5.917"
151.5mm = 5.965"

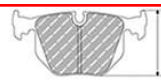

52.6mm = 2.071"
52.6mm = 2.071"



17.0mm = 0.669"
17.0mm = 0.669"



46.5mm = 1.831"
46.5mm = 1.831"

FIAT Front

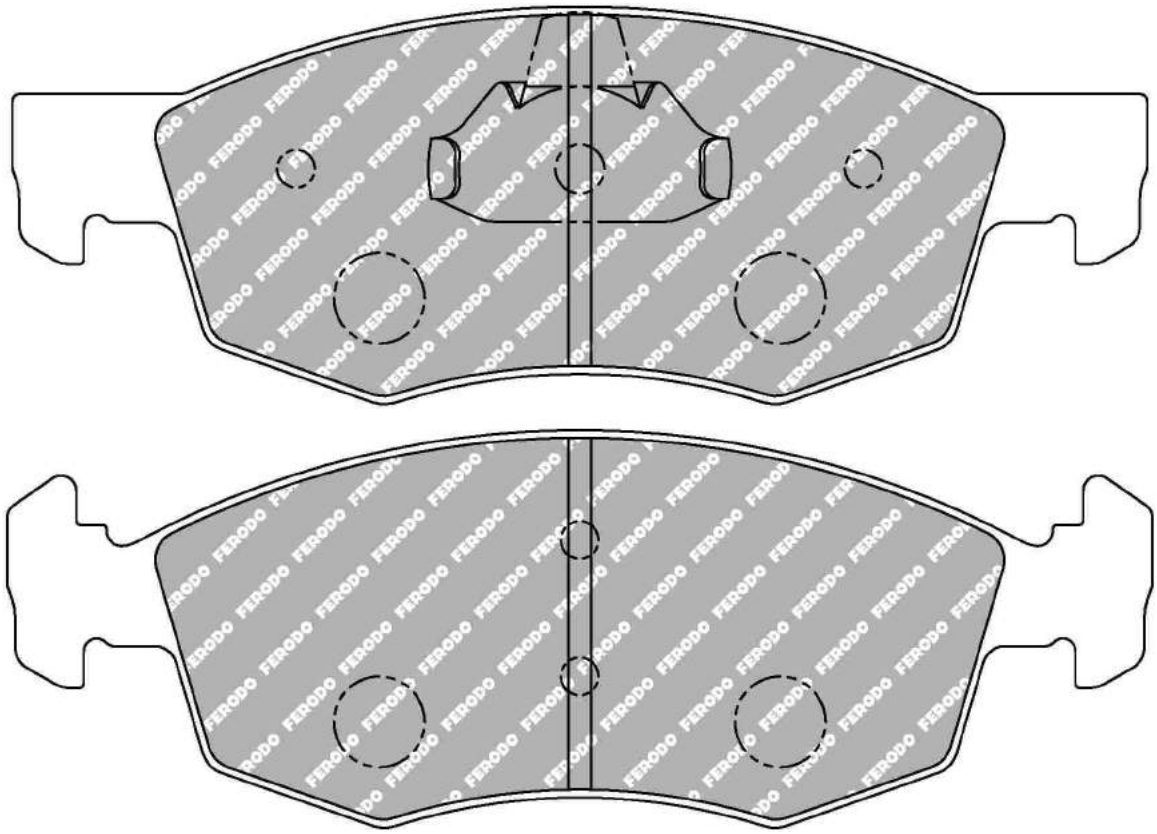

MATERIAL AVAILABILITY						
H	C	R	W	WB	Z	ZB
✔		✔				

CROSS REFERENCE	
BREMBO	07.8301.77
MINTEX	MDB2076
WVA	23552 17,80

✔ Available
✖ Out of Range
In Introduction
Exhausting
Make to order

FERODO RACING

Updated on November 2020

FCP1378

WVA No: 23597 16,80


131.0mm = 5.157"

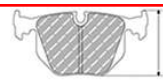
47.5mm = 1.870"


16.8mm = 0.661"


42.5mm = 1.673"

CITROEN Front / Rear, PEUGEOT Front

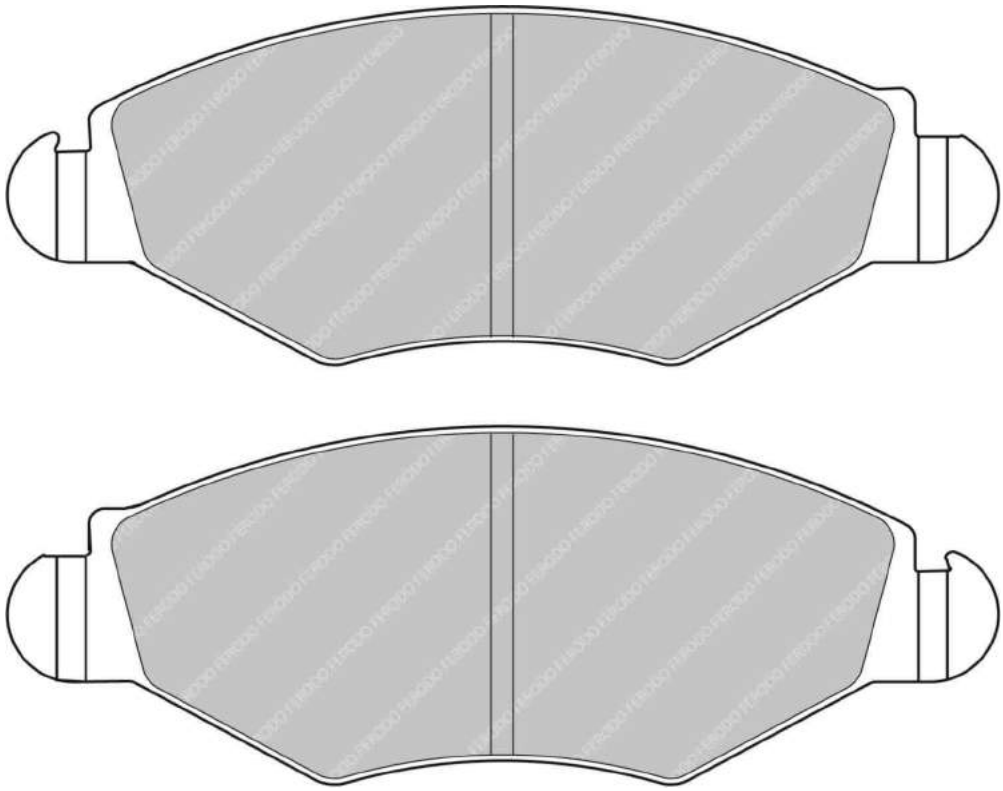

MATERIAL AVAILABILITY						
H	C	R	W	WB	Z	ZB
✔		✔				

CROSS REFERENCE	
ALCON	PNF0084X321.4
BREMBO	07.8301.78
MINTEX	MDB2131
WVA	23597 16,80

FERODO RACING

Updated on November 2020

✔ Available
✖ Out of Range
In Introduction
Exhausting
Make to order

FCP1382

WVA No: 23073 18,80
FMSI No: D794


155.4mm = 6.118"
156.5mm = 6.161"

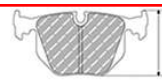
69.0mm = 2.717"
69.0mm = 2.717"


17.9mm = 0.705"
17.9mm = 0.705"


54.3mm = 2.138"
54.3mm = 2.138"

VOLVO Front

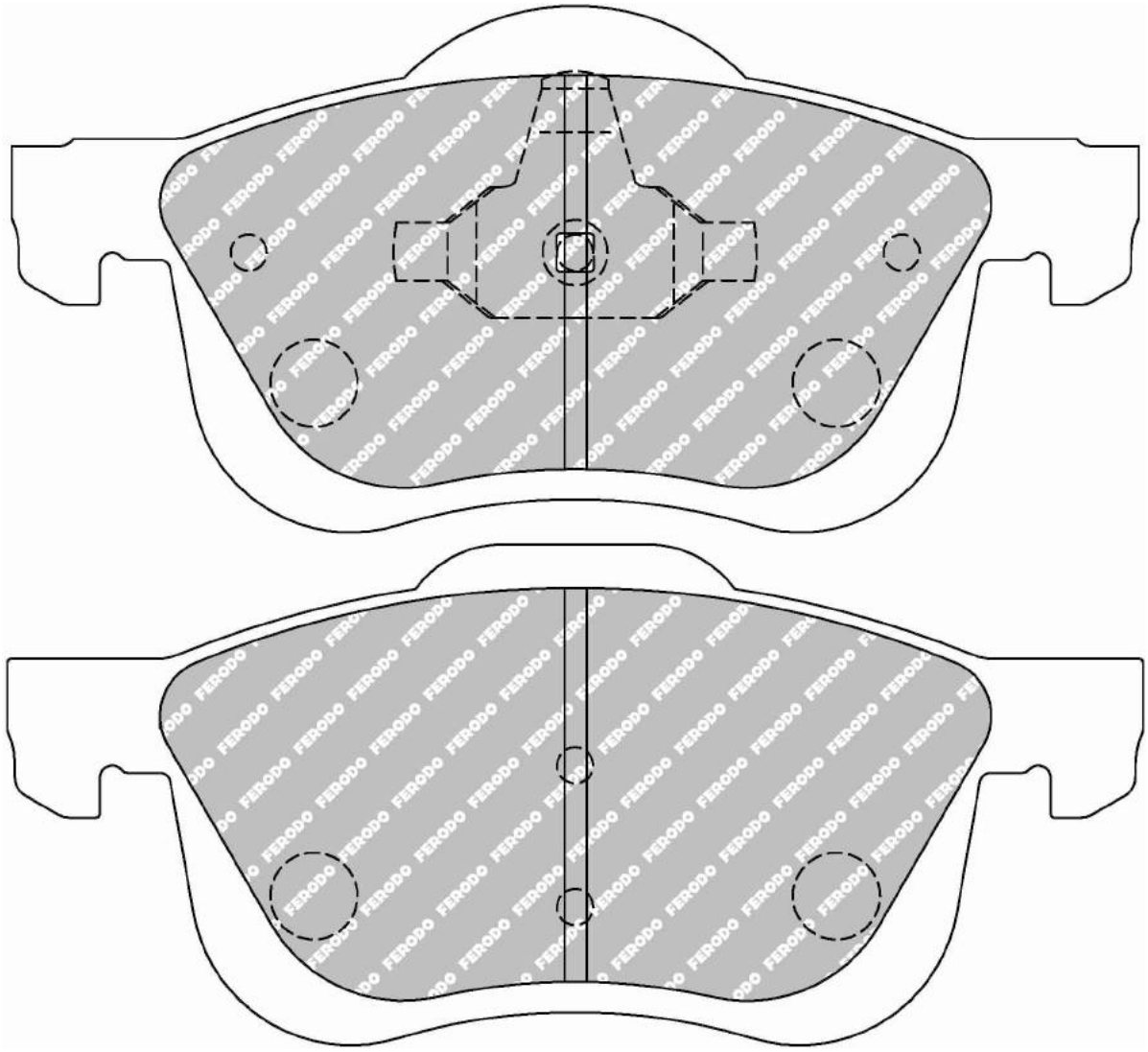

MATERIAL AVAILABILITY						
H	C	R	W	WB	Z	ZB
✔						

CROSS REFERENCE	
FMSI	D794
HAWK	HB491 0,693
MINTEX	MDB1944
WVA	23073 18,80

✔ Available
✖ Out of Range
In Introduction
Exhausting
Make to order

FERODO RACING

Updated on November 2020

FCP1392

WVA No: 23510 16,50
FMSI No: D990


116.6mm = 4.591"

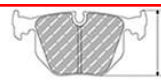
51.0mm = 2.008"


16.5mm = 0.650"


46.0mm = 1.811"

TOYOTA Front

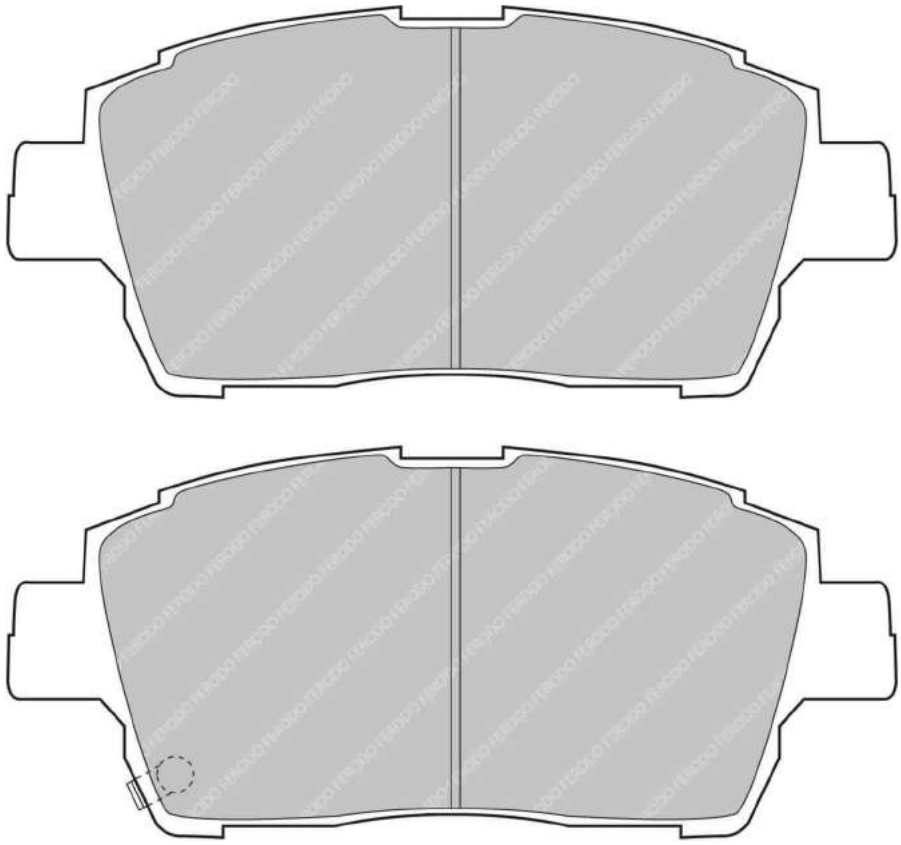

MATERIAL AVAILABILITY						
H	C	R	W	WB	Z	ZB
✔						

CROSS REFERENCE	
FMSI	D990
HAWK	HB493 0,65
MINTEX	MDB2029
PAGID	8029
WVA	23510 16,50

FERODO RACING
Updated on November 2020

Available
Out of Range
In Introduction
Exhausting
Make to order

FCP1394

WVA No: 23202 18,50



150.2mm = 5.913"
151.4mm = 5.961"

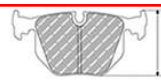

61.5mm = 2.421"
59.0mm = 2.323"



18.6mm = 0.732"
18.6mm = 0.732"



48.1mm = 1.894"
48.1mm = 1.894"

FORD Front, MAZDA Front, TOYOTA Front

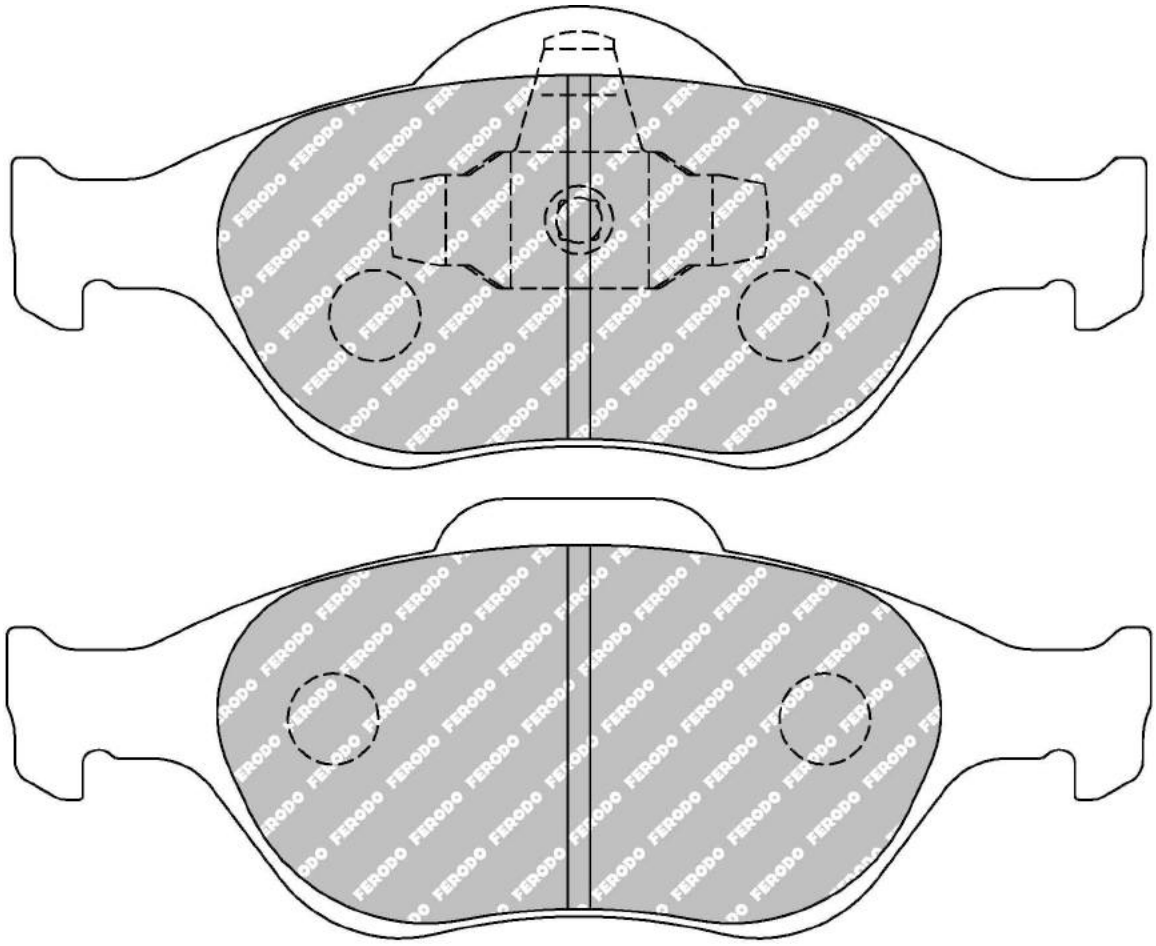

MATERIAL AVAILABILITY						
H	C	R	W	WB	Z	ZB
✔		✔				

CROSS REFERENCE	
MINTEX	MDB2314
WVA	23202 18,50

✔ Available
✖ Out of Range
In Introduction
Exhausting
Make to order

FERODO RACING

Updated on November 2020

FCP1399

WVA No: 23954 19,00 (Ex 23599)



CITROEN Front, PEUGEOT Front

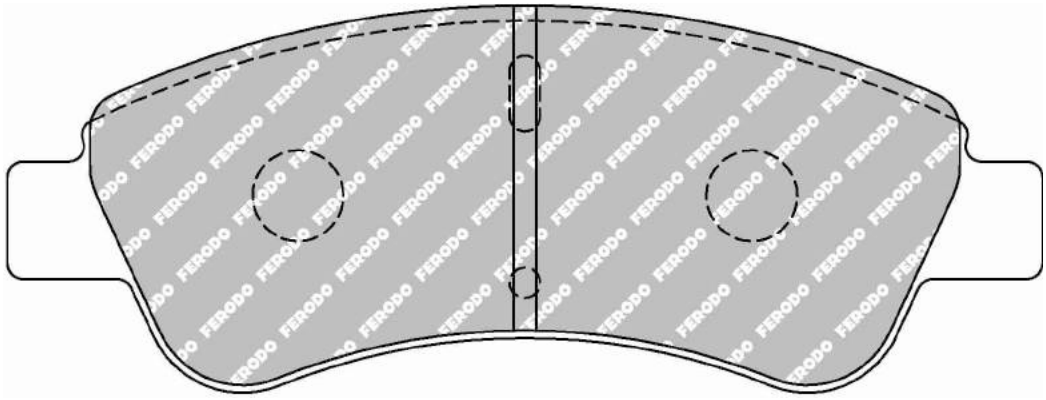

ALSO AVAILABLE		
SHAPE	TH. MM	NOTES
FRP3146	17.2	

MATERIAL AVAILABILITY						
H	C	R	W	WB	Z	ZB
✔		✔			✉	

CROSS REFERENCE	
MINTEX	MDB2283 (Ex 2183)
MINTEX	MDB2628
PAGID	8212
WVA	23954 19,00 (Ex 23599)

FCP1419

WVA No: 23581 18,70



SEAT Front, SKODA Front, VOLKSWAGEN Front

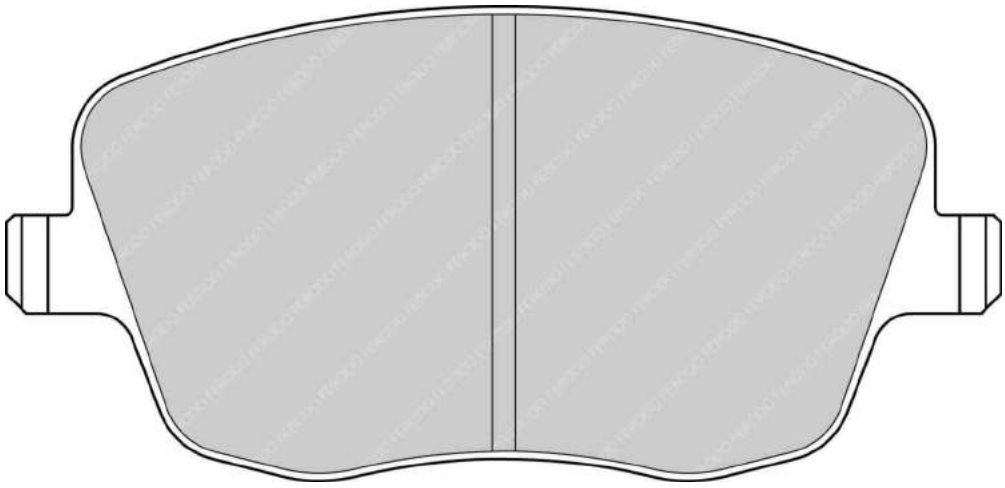

MATERIAL AVAILABILITY						
H	C	R	W	WB	Z	ZB
✔		✔				

CROSS REFERENCE	
MINTEX	MDB2294
WVA	23581 18,70

FERODO RACING

Updated on November 2020

✔ Available ⚠ Exhausting
✖ Out of Range ✉ Make to order
In Introduction

FCP1424

WVA No: 23225 17,00



131.7mm = 5.185"
131.7mm = 5.185"

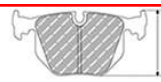

55.4mm = 2.181"
52.3mm = 2.059"



16.0mm = 0.630"
16.0mm = 0.630"



45.5mm = 1.791"
45.5mm = 1.791"

OPEL Front, VAUXHALL Front

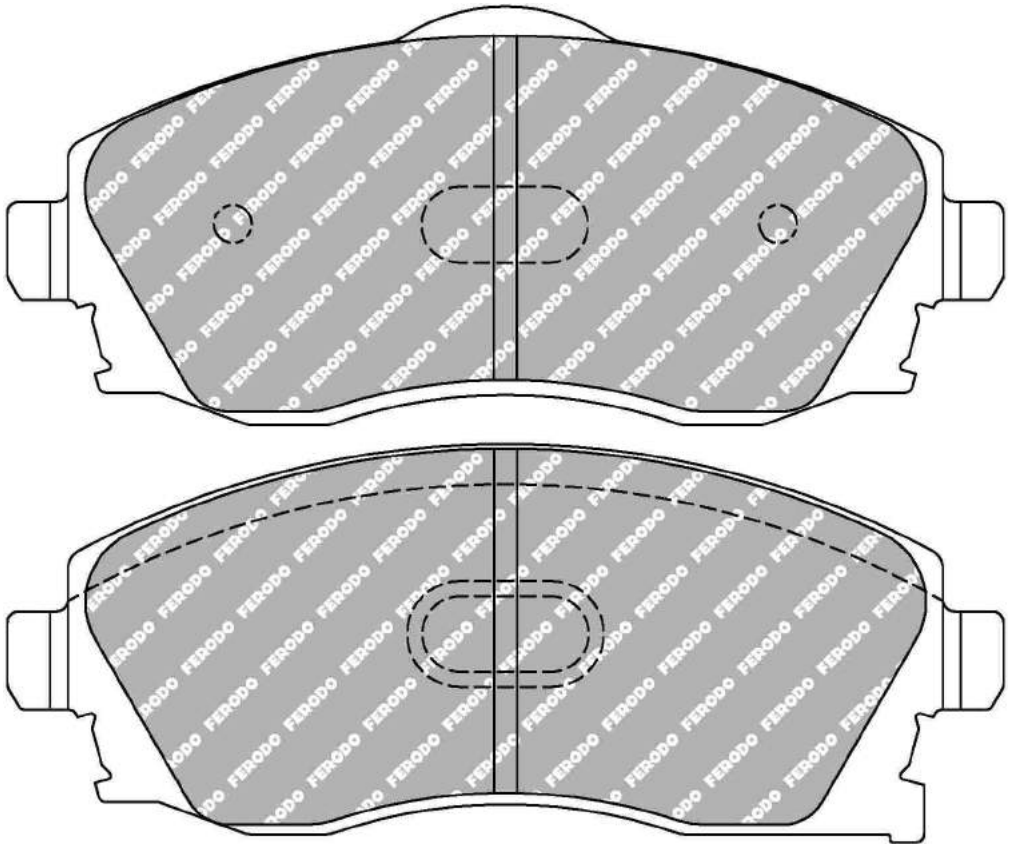

MATERIAL AVAILABILITY						
H	C	R	W	WB	Z	ZB
✔						

CROSS REFERENCE	
MINTEX	MDB2073
WVA	23225 17,00

✔ Available
✖ Out of Range
In Introduction
Exhausting
Make to order

FERODO RACING

Updated on November 2020

FCP1430


137.5mm = 5.413"

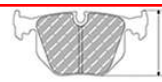
53.0mm = 2.087"


16.9mm = 0.665"


45.5mm = 1.791"

FMSI No: D526

INFINITI Front, NISSAN Front

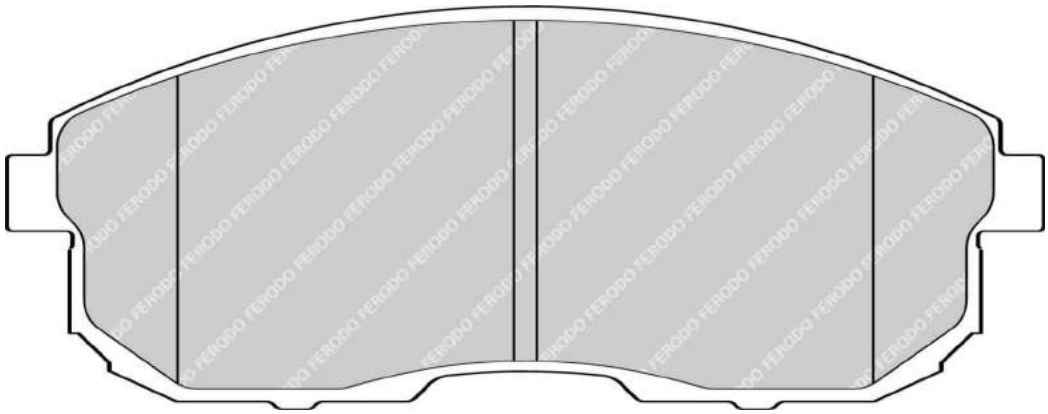

MATERIAL AVAILABILITY						
H	C	R	W	WB	Z	ZB
✔						

CROSS REFERENCE	
BREMBO	07.8300.20
BREMBO	07.8300.26
FMSI	D526
FMSI	D653
FMSI	D815
HAWK	HB412 0,665
MINTEX	MDB2847
MINTEX	MDB2967
PFC	0526.XX
PFC	0815.XX

FCP1436


129.0mm = 5.079"

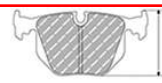
55.0mm = 2.165"


16.2mm = 0.638"


48.0mm = 1.890"

WVA No: 23566 17,20
FMSI No: D617

ACURA Front, HONDA Front

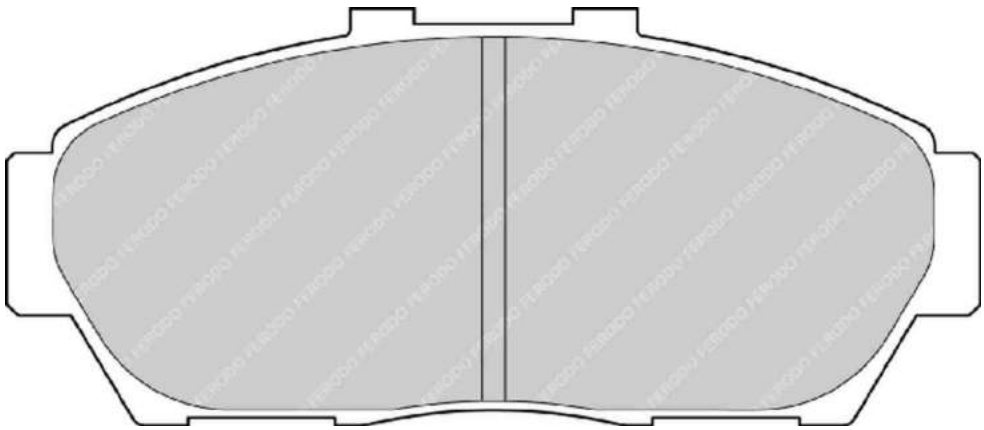

MATERIAL AVAILABILITY						
H	C	R	W	WB	Z	ZB

CROSS REFERENCE	
BREMBO	07.8300.33
FMSI	D617
HAWK	HB245 0,631
PFC	0617.XX
WVA	23566 17,20

FERODO RACING

Updated on November 2020

Available
Out of Range
In Introduction
Exhausting
Make to order

FCP1441

WVA No: 23245



155.4mm = 6.118"
156.5mm = 6.161"

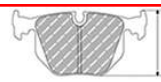

70.8mm = 2.787"
67.9mm = 2.673"



18.3mm = 0.720"
18.3mm = 0.720"



57.4mm = 2.260"
57.4mm = 2.260"

RENAULT Front

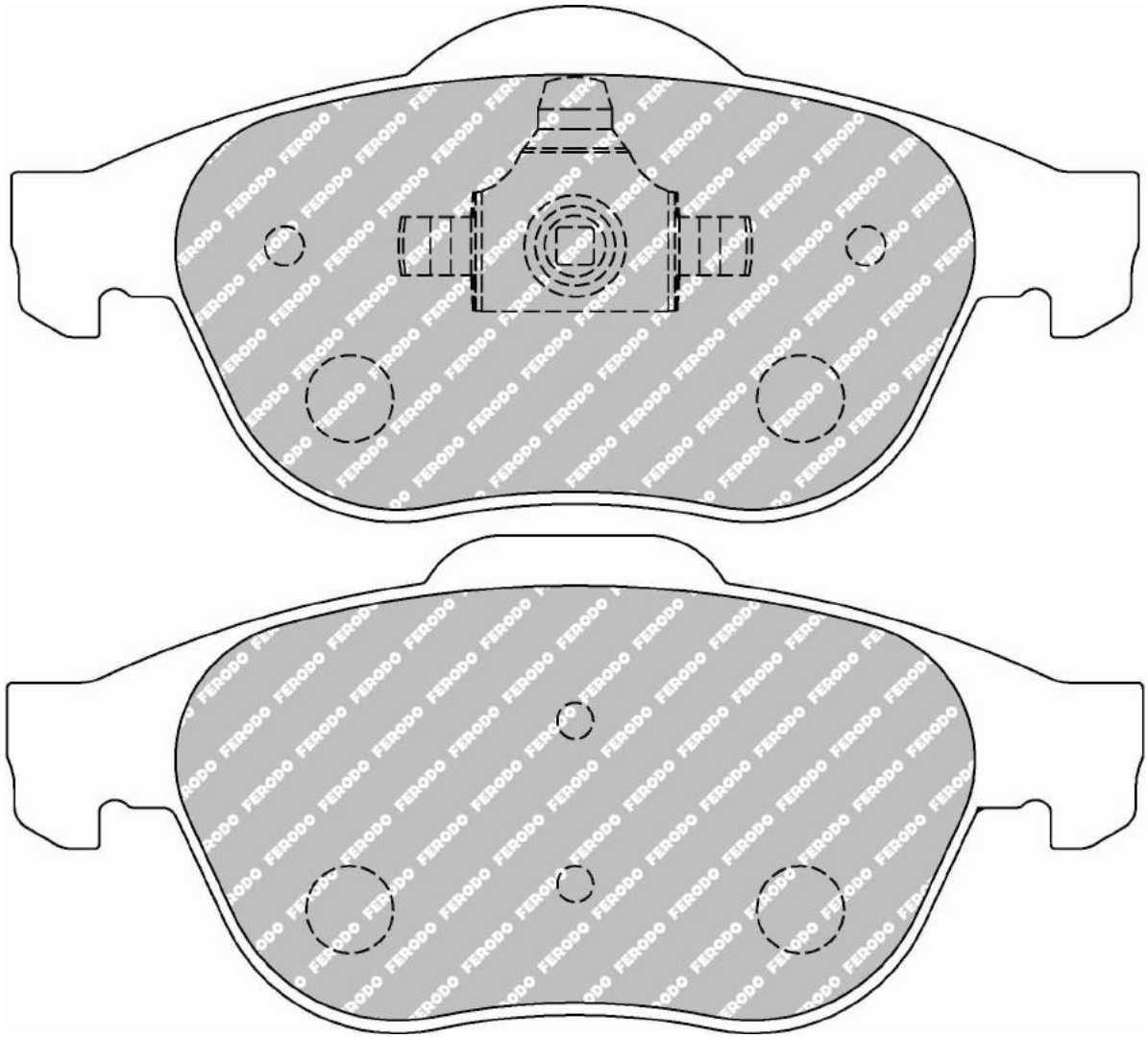

MATERIAL AVAILABILITY						
H	C	R	W	WB	Z	ZB
✔		✉				

CROSS REFERENCE	
EBC	DP1958
MINTEX	MDB2224
MINTEX	MDB2225
OE Renault	7701206599
WVA	23245

✔ Available
✖ Out of Range
In Introduction
Exhausting
Make to order

FERODO RACING

Updated on November 2020

FCP1444

WVA No: 23178 18,00


135.2mm = 5.323"

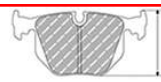
52.0mm = 2.047"


16.0mm = 0.630"


49.0mm = 1.929"

HONDA Front

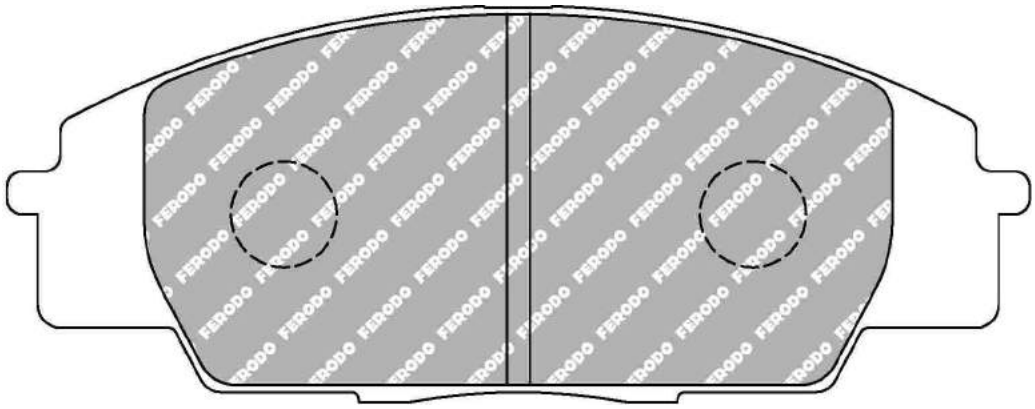

MATERIAL AVAILABILITY						
H	C	R	W	WB	Z	ZB
✔		✔	✔			

CROSS REFERENCE	
BREMBO	07.8301.90
MINTEX	MDB2044
PFC	0829
WVA	23178 18,00

FCP1456

WVA No: 23524


119.55mm = 4.707"

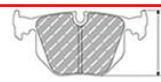
78.6mm = 3.094"


17.1mm = 0.673"


55.4mm = 2.181"

LEXUS Front, TOYOTA Front

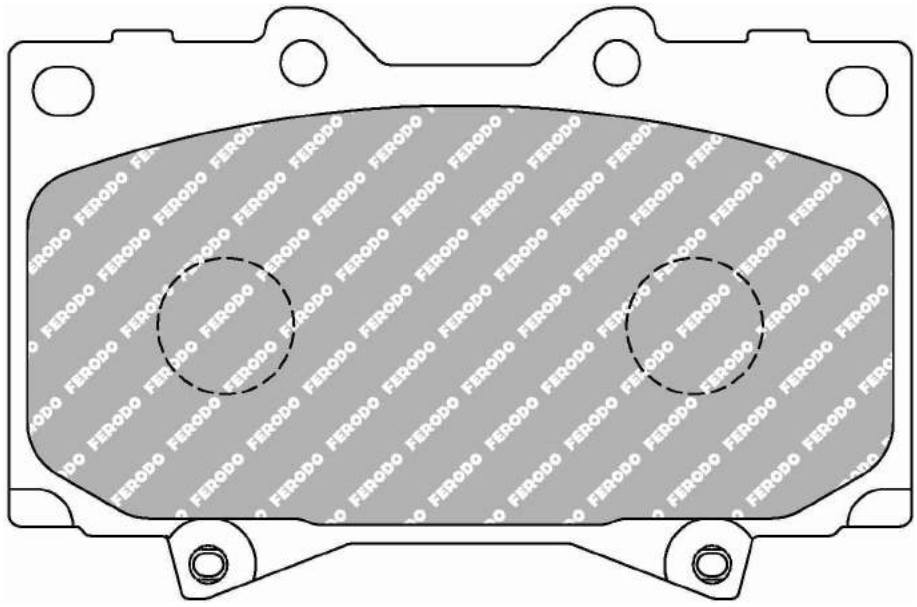

MATERIAL AVAILABILITY						
H	C	R	W	WB	Z	ZB
✔						

CROSS REFERENCE	
BREMBO	P83 048
WVA	23524

FERODO RACING

Updated on November 2020

✔ Available
✖ Out of Range
In Introduction
Exhausting
Make to order

FCP1457

WVA No: 23539
FMSI No: D606


123.25mm = 4.852"

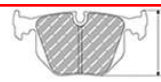
45.6mm = 1.795"


17.5mm = 0.689"


38.4mm = 1.512"

LEXUS Rear, TOYOTA Rear

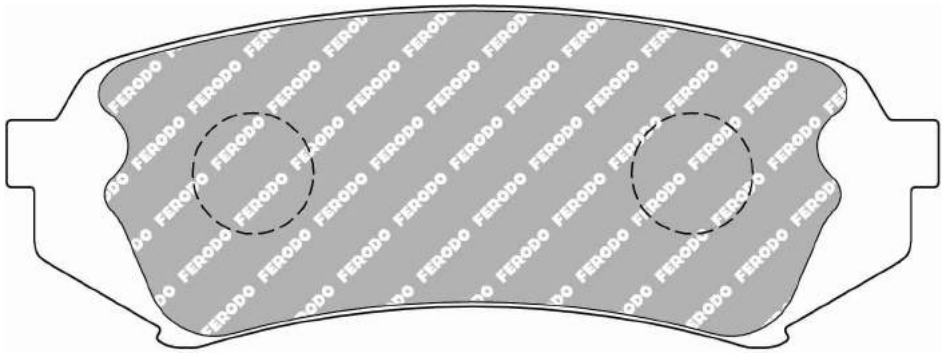

MATERIAL AVAILABILITY						
H	C	R	W	WB	Z	ZB
✔						

CROSS REFERENCE	
BREMBO	P83 049
EBC	DP4993
FMSI	D606
WVA	23539

FCP1459

WVA No: 20046 15,30


130.9mm = 5.154"

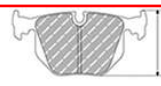
44.5mm = 1.752"


15.3mm = 0.602"


37.7mm = 1.484"

SUBARU Front, SUZUKI Front

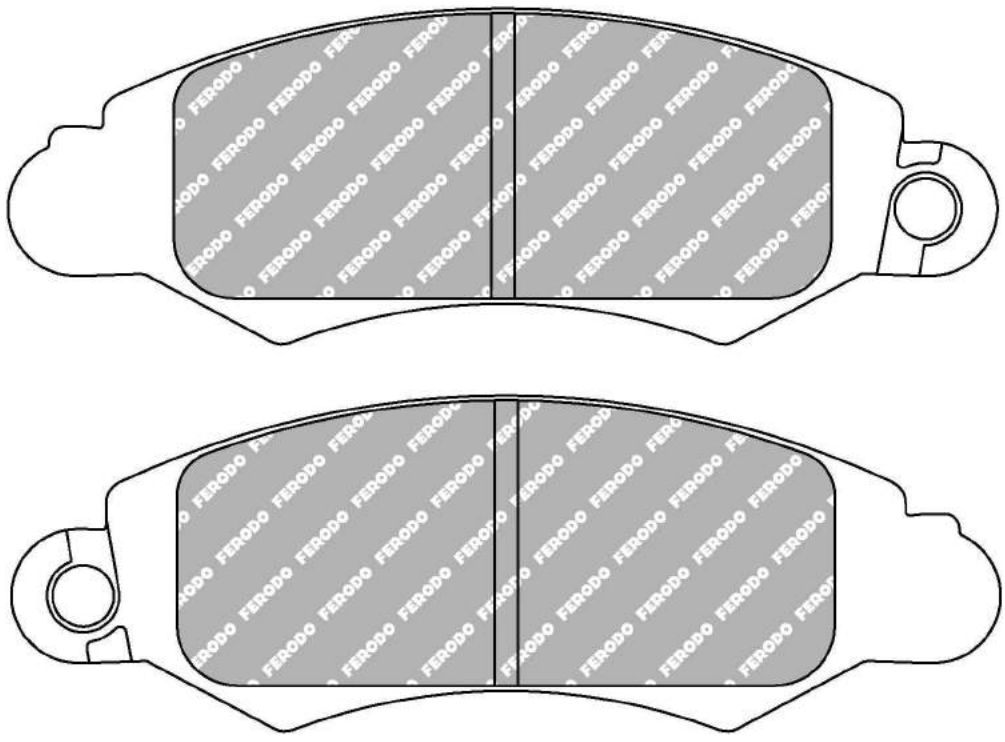

MATERIAL AVAILABILITY						
H	C	R	W	WB	Z	ZB
		✉				

CROSS REFERENCE	
MINTEX	MDB2003
WVA	20046 15,30

✔ Available
✖ Out of Range
In Introduction
Exhausting
Make to order

FERODO RACING

Updated on November 2020

FCP1466

WVA No: 23705 17,10 - 24288 17,70&17,90


123.0mm = 4.843"

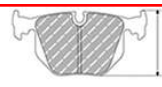
53.3mm = 2.098"


17.9mm = 0.705"


47.7mm = 1.878"

ABARTH Front, ALFA ROMEO Front, FIAT Front, OPEL Front

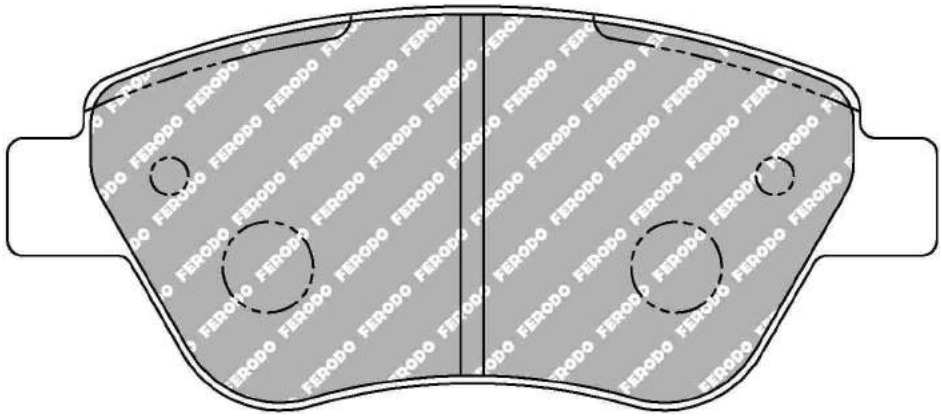

MATERIAL AVAILABILITY						
H	C	R	W	WB	Z	ZB
✓		✉			✉	

CROSS REFERENCE	
MINTEX	MDB2239
MINTEX	MDB2644
MINTEX	MDB3193
WVA	23705 17,10 - 24288 17,70&17,90

FCP1467

WVA No: 23708 18,40


137.0mm = 5.394"

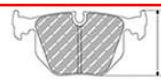
57.4mm = 2.260"


19.2mm = 0.756"


52.2mm = 2.055"

ABARTH Front, CITROEN Front, FIAT Front, LANCIA Front, OPEL Front, PEUGEOT Front

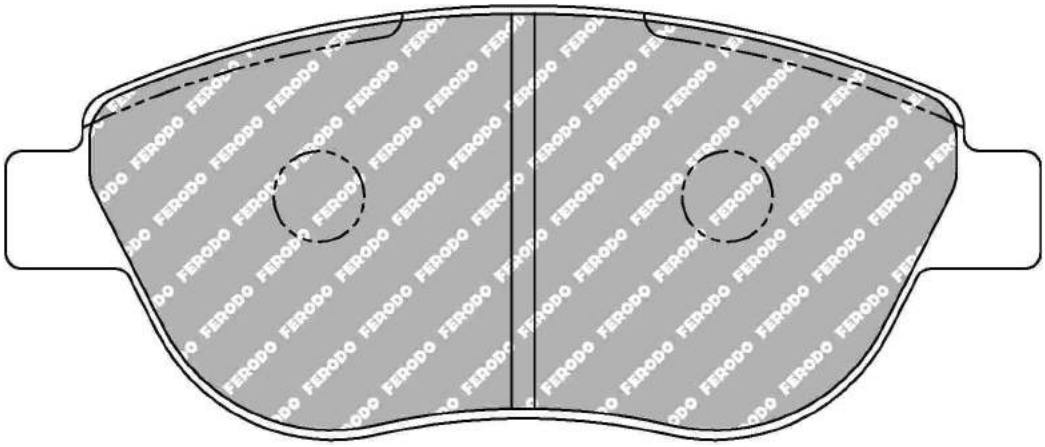

MATERIAL AVAILABILITY						
H	C	R	W	WB	Z	ZB
✓		✓			✓	

CROSS REFERENCE	
BREMBO	07.8301.79
MINTEX	MDB2240
WVA	23708 18,40

FERODO RACING

Updated on November 2020

✓ Available
✗ Out of Range
In Introduction
Exhausting
Make to order

FCP1468

WVA No: 23711 18,40


151.0mm = 5.945"

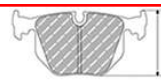
57.5mm = 2.264"


19.2mm = 0.756"


51.0mm = 2.008"

ALFA ROMEO Front, FIAT Front, LANCIA Front

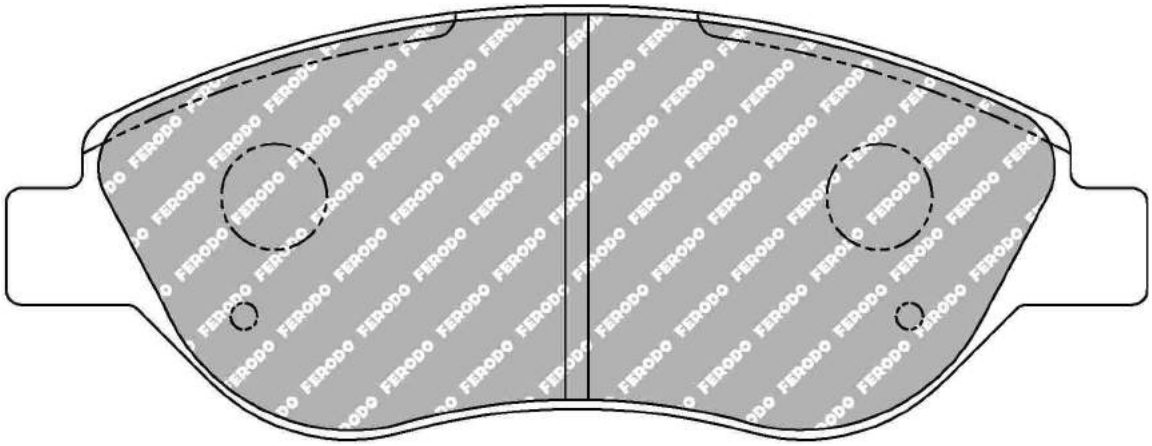

MATERIAL AVAILABILITY						
H	C	R	W	WB	Z	ZB
✔		✔				

CROSS REFERENCE	
BREMBO	07.8301.80
MINTEX	MDB2241
WVA	23711 18,40

FCP1469

WVA No: 23714 15,80


95.0mm = 3.740"

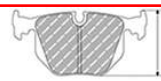
43.0mm = 1.693"


16.5mm = 0.650"


41.3mm = 1.626"

ALFA ROMEO Rear, FIAT Rear, LANCIA Rear, PEUGEOT Rear

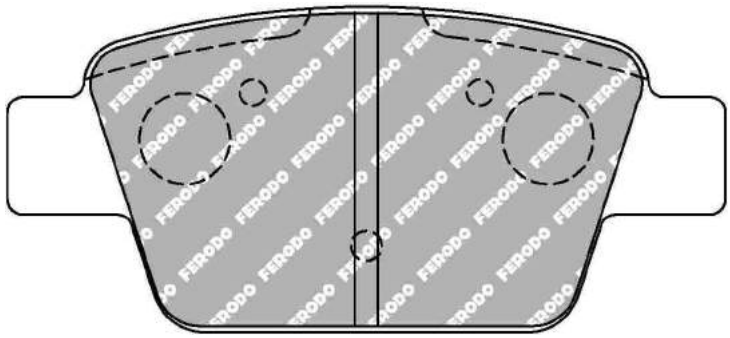

MATERIAL AVAILABILITY						
H	C	R	W	WB	Z	ZB
✔		✔				

CROSS REFERENCE	
MINTEX	MDB2238
WVA	23714 15,80

FCP1483

WVA No: 21282 17,20
FMSI No: D683


123.0mm = 4.843"

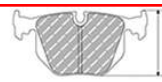
59.4mm = 2.339"


17.2mm = 0.677"


59.4mm = 2.339"

BMW Rear, LAND ROVER Rear

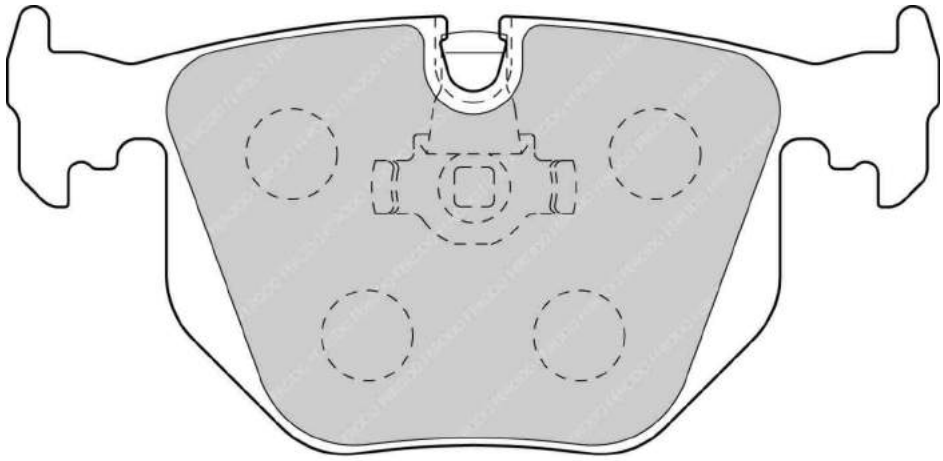

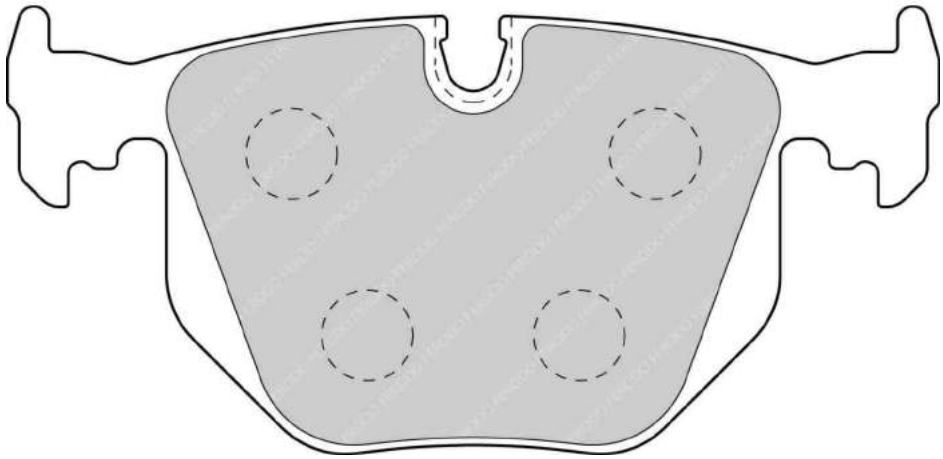

ALSO AVAILABLE		
SHAPE	TH. MM	NOTES
FCP857	17	Different Spring clip

MATERIAL AVAILABILITY						
H	C	R	W	WB	Z	ZB
✔		✉	✉		✉	

CROSS REFERENCE	
FMSI	D683
HAWK	HB518 0,642
MINTEX	MDB2004
PAGID	2685
PFC	0548
WVA	21282 17,20

FERODO RACING
Updated on November 2020

✔ Available
✖ Out of Range
In Introduction
Exhausting
Make to order

FCP1491

WVA No: 20961 16,00


87.4mm = 3.441"

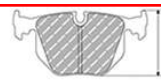
52.9mm = 2.083"


16.0mm = 0.630"


40.7mm = 1.602"

AUDI Rear, CITROEN Rear, PEUGEOT Rear, PORSCHE Rear, RENAULT Rear, SEAT Rear, SKODA Front / Rear, VOLKSWAGEN Rear

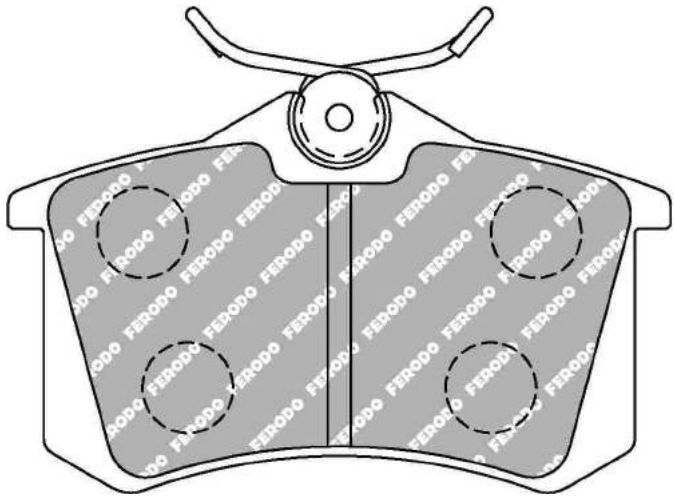

ALSO AVAILABLE		
SHAPE	TH. MM	NOTES
FCP541	15	

MATERIAL AVAILABILITY						
H	C	R	W	WB	Z	ZB
✔			✔			

CROSS REFERENCE	
MINTEX	MDB1377
MINTEX	MDB2256
OE AUDI	8E0698451D
OE AUDI	8E0698451E
OE Renault	440600364R
OE Renault	440602070R
OE Renault	440607960R
OE Renault	6025371650
OE VOLKSWAGEN	1K0698451J
PAGID	1158
PAGID	T5075
PFC	0340-07-15-44
WVA	20961 16,00

FCP1499

WVA No: 23281 18,00
FMSI No: D939


140.3mm = 5.524"
140.3mm = 5.524"

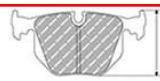
58.8mm = 2.315"
59.9mm = 2.358"


18.0mm = 0.709"
18.0mm = 0.709"


45.6mm = 1.795"
45.6mm = 1.795"

MINI Front

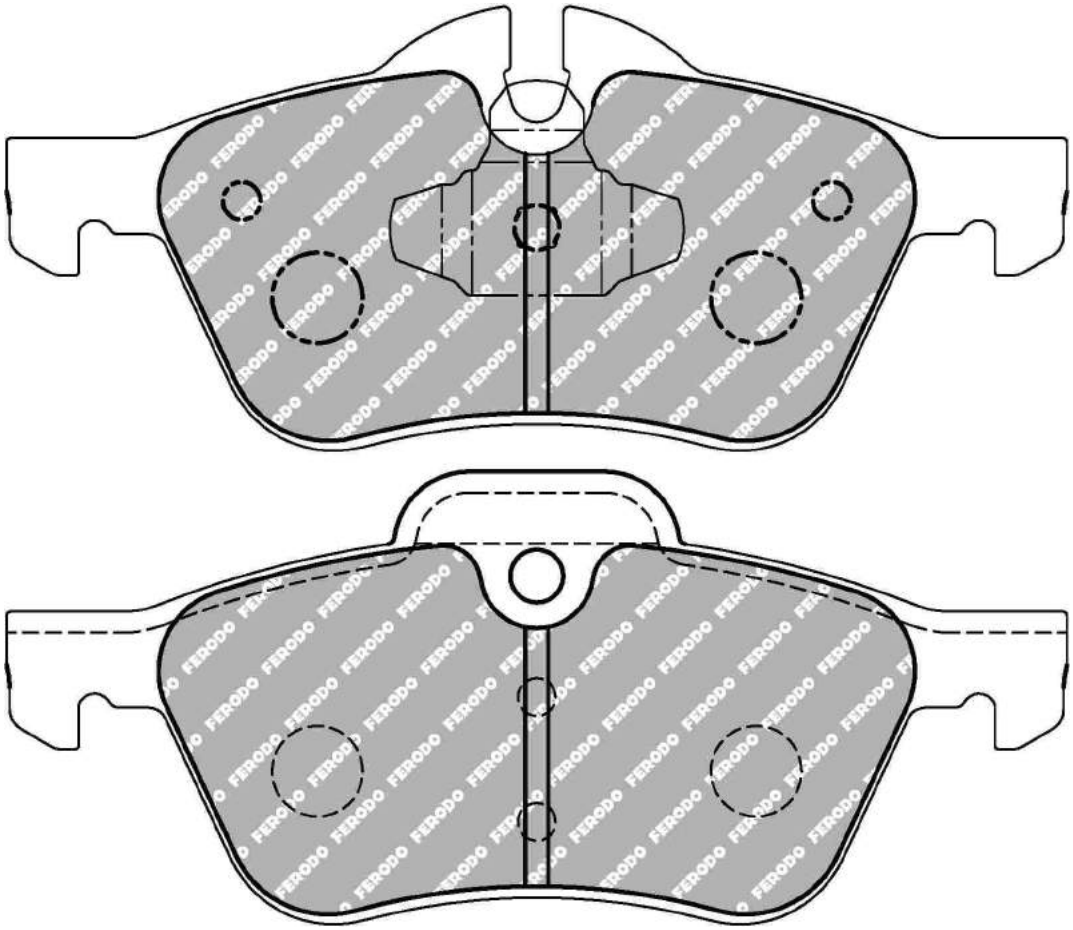

MATERIAL AVAILABILITY						
H	C	R	W	WB	Z	ZB
✔		✔	✔			

CROSS REFERENCE	
BREMBO	07.8301.88
FMSI	D939
HAWK	HB444 0,685
MINTEX	MDB2162
PAGID	2959
WVA	23281 18,00

FERODO RACING
Updated on November 2020

Available
Out of Range
In Introduction
Exhausting
Make to order

FCP1501

WVA No: 23497 15,40



95.0mm = 3.740"
115.5mm = 4.547"

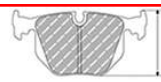

49.6mm = 1.953"
49.6mm = 1.953"



15.4mm = 0.606"
15.3mm = 0.602"



39.0mm = 1.535"
36.0mm = 1.417"

DAIHATSU Front

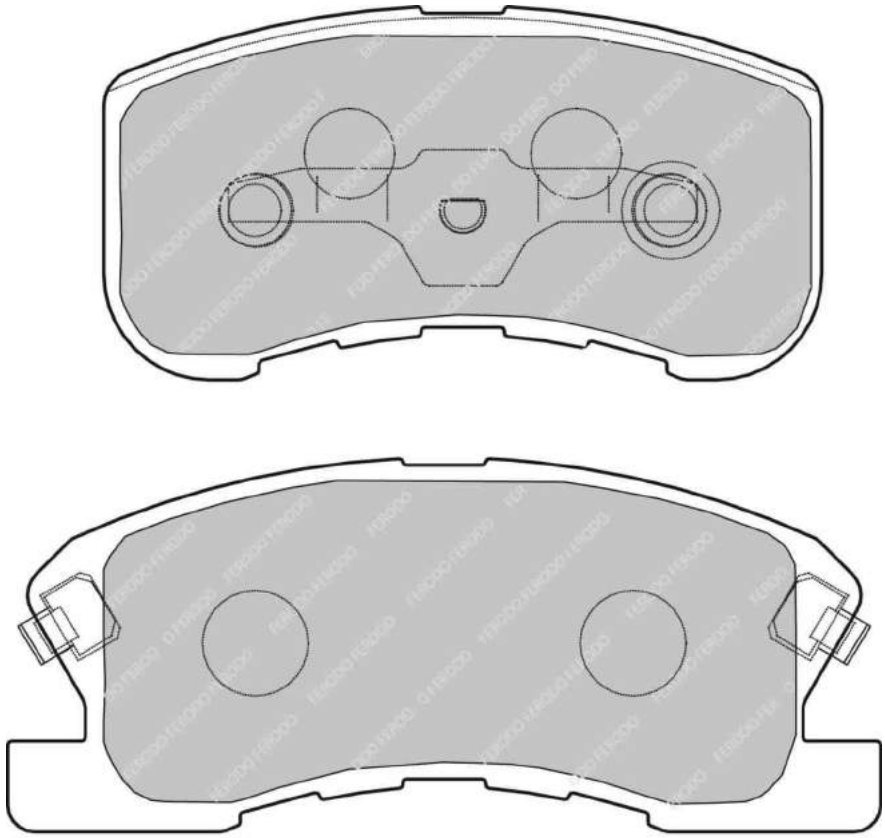

MATERIAL AVAILABILITY						
H	C	R	W	WB	Z	ZB
		✉				

CROSS REFERENCE	
MINTEX	MDB1910
WVA	23497 15,40

✔ Available
✖ Out of Range
In Introduction
Exhausting
Make to order

FERODO RACING

Updated on November 2020

FCP1520

WVA No: 23402 20,10 - 23403 20,10


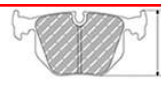



155.4mm = 6.118"	69.5mm = 2.736"	19.5mm = 0.768"	59.7mm = 2.350"
156.6mm = 6.165"	70.5mm = 2.776"	19.5mm = 0.768"	59.7mm = 2.350"

CHEVROLET Front, FIAT Front, OPEL Front, SAAB Front, VAUXHALL Front

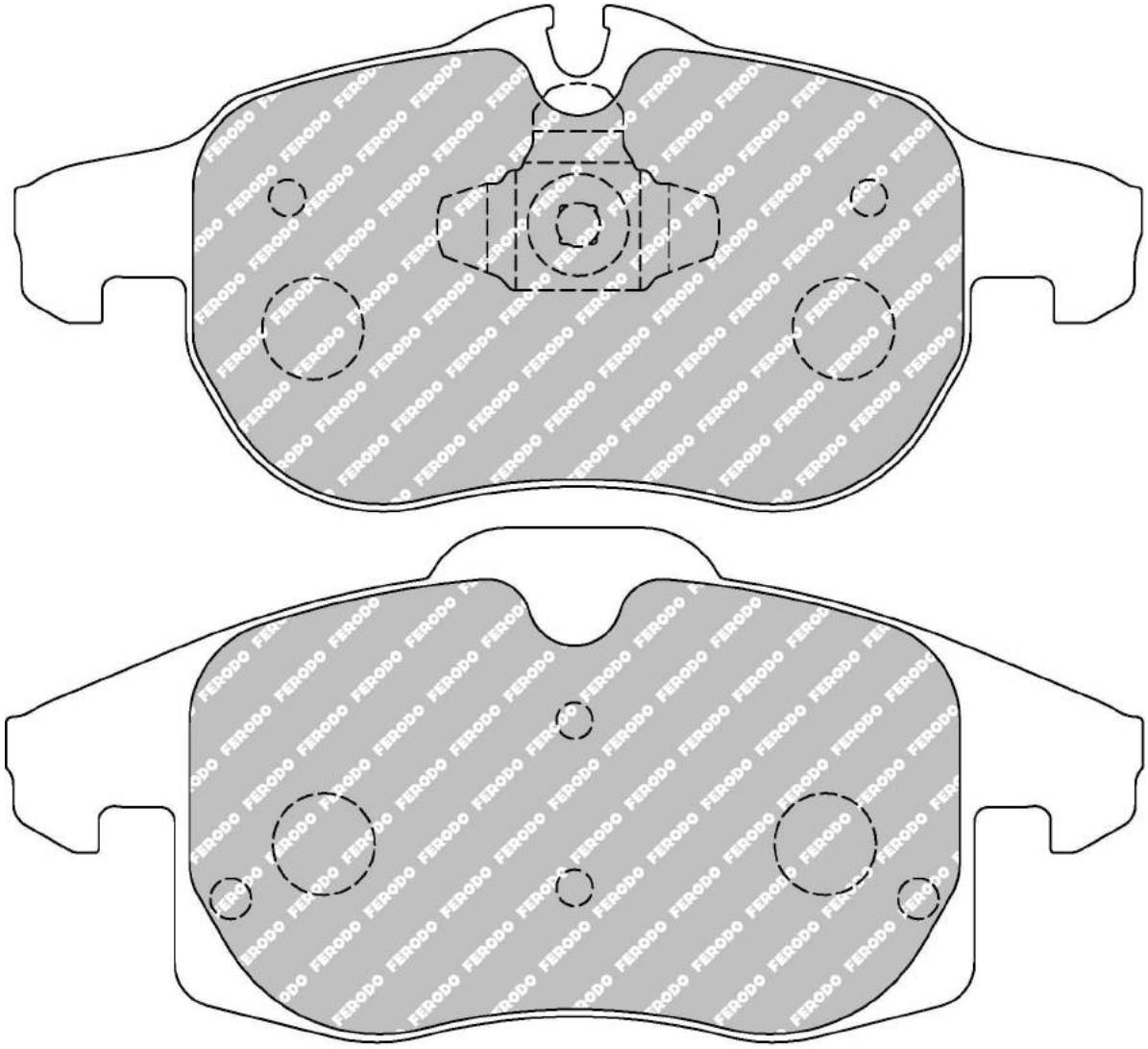

MATERIAL AVAILABILITY						
H	C	R	W	WB	Z	ZB
✔						

CROSS REFERENCE	
MINTEX	MDB2262
WVA	23402 20,10 - 23403 20,10

FERODO RACING

Updated on November 2020

Available
Out of Range
In Introduction
Exhausting
Make to order

FCP1521

WVA No: 23417 15,20


95.5mm = 3.760"

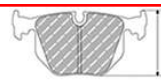
42.8mm = 1.685"


15.1mm = 0.594"


37.0mm = 1.457"

CHEVROLET Rear, CHRYSLER Rear, KIA Rear, OPEL Rear, VAUXHALL Rear

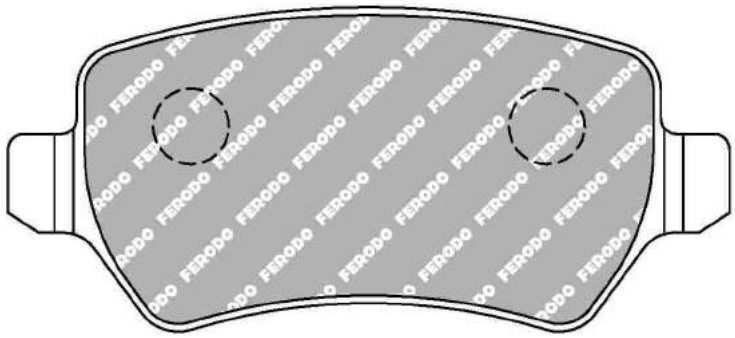

MATERIAL AVAILABILITY						
H	C	R	W	WB	Z	ZB
✔						

CROSS REFERENCE	
MINTEX	MDB2223
PAGID	8185
WVA	23417 15,20

FCP1528

WVA No: 23526 17,40
FMSI No: D817


117.8mm = 4.638"

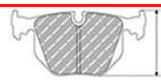
58.0mm = 2.283"


18.2mm = 0.717"


50.1mm = 1.972"

TOYOTA Front

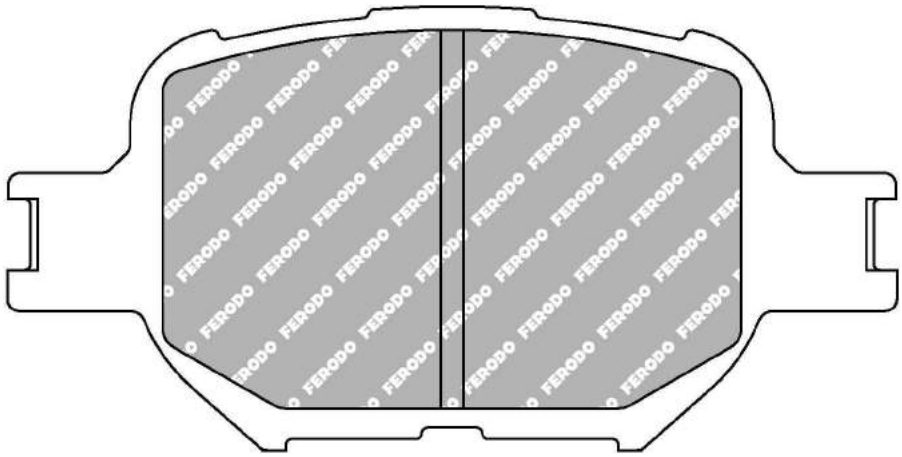

MATERIAL AVAILABILITY						
H	C	R	W	WB	Z	ZB
✔		✔				

CROSS REFERENCE	
FMSI	D817
HAWK	HB328 0,685
MINTEX	MDB2013
MINTEX	MDB2291
WVA	23526 17,40

FCP1540

WVA No: 23482 16,50


123.1mm = 4.846"

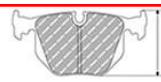
52.0mm = 2.047"


15.8mm = 0.622"


41.0mm = 1.614"

CHEVROLET Rear, FORD Rear, NISSAN Rear, OPEL Rear, RENAULT Rear, SAAB Rear, VAUXHALL Rear

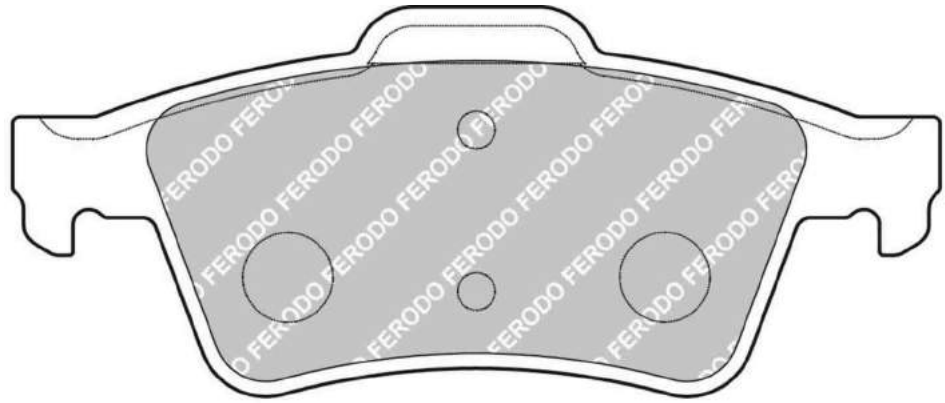

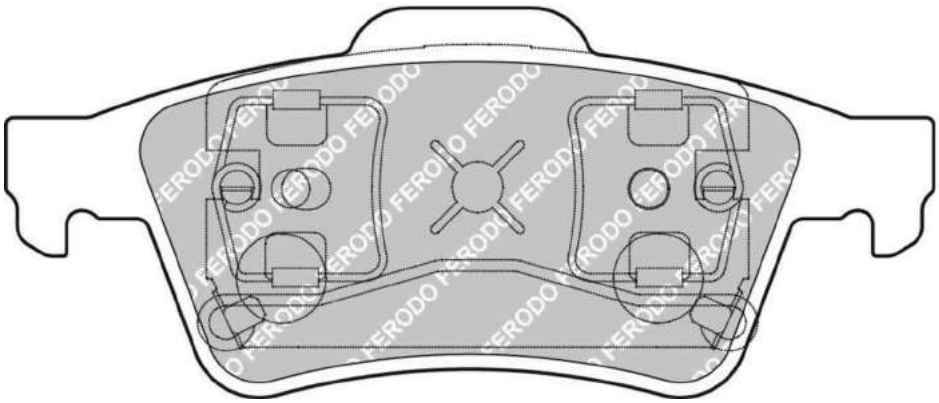

MATERIAL AVAILABILITY						
H	C	R	W	WB	Z	ZB
✔						

CROSS REFERENCE	
MINTEX	MDB2210
MINTEX	MDB2281
WVA	23482 16,50

FERODO RACING

Updated on November 2020

Available
Out of Range
In Introduction
Exhausting
Make to order

FCP1543

WVA No: 23409 19,30


129.0mm = 5.079"

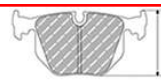
56.4mm = 2.220"


19.1mm = 0.752"


44.4mm = 1.748"

CITROEN Front

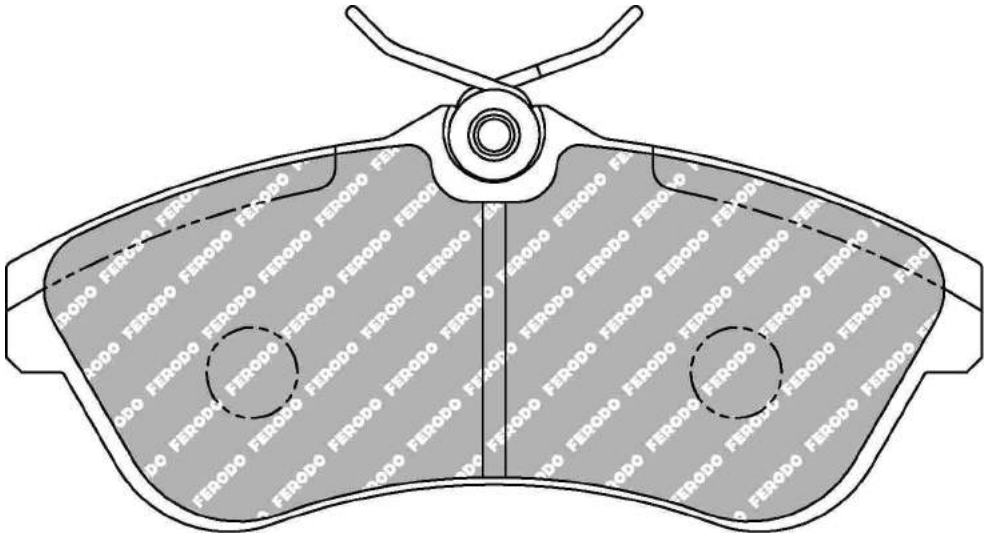

MATERIAL AVAILABILITY						
H	C	R	W	WB	Z	ZB
✔		✔				

CROSS REFERENCE	
BREMBO	07.8301.91
MINTEX	MDB2254
WVA	23409 19,30

FCP1553

WVA No: 24194 15,3
FMSI No: D731


183.8mm = 7.236"

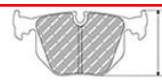
63.0mm = 2.480"


14.7mm = 0.579"


50.0mm = 1.969"

CHEVROLET Front, HOLDEN Front

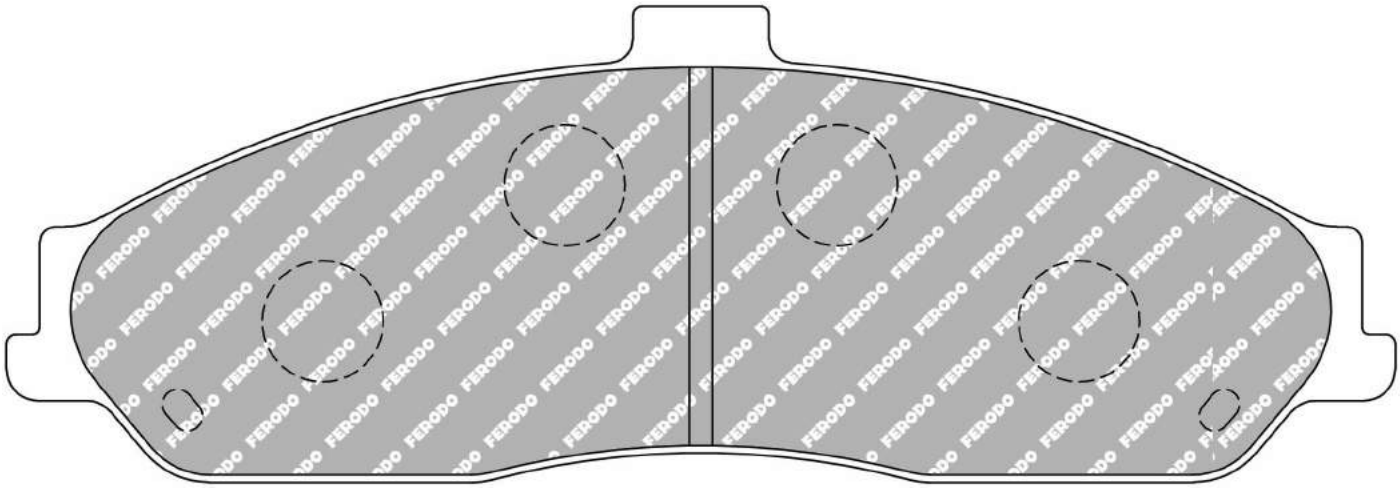

MATERIAL AVAILABILITY						
H	C	R	W	WB	Z	ZB
✔		✉	✉		✉	

CROSS REFERENCE	
FMSI	D731
HAWK	HB247
MINTEX	MDB2213
PFC	0731
Raybestos	DR731
SBS	3019
Wilwood	D731
WVA	24194 15,3

FERODO RACING
Updated on November 2020

✔ Available
✖ Out of Range
In Introduction
Exhausting
Make to order

FCP1560

WVA No: 20410 12,90


126.0mm = 4.961"

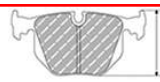
59.0mm = 2.323"


12.9mm = 0.508"


41.0mm = 1.614"

LOTUS Rear, OPEL Rear, VAUXHALL Rear

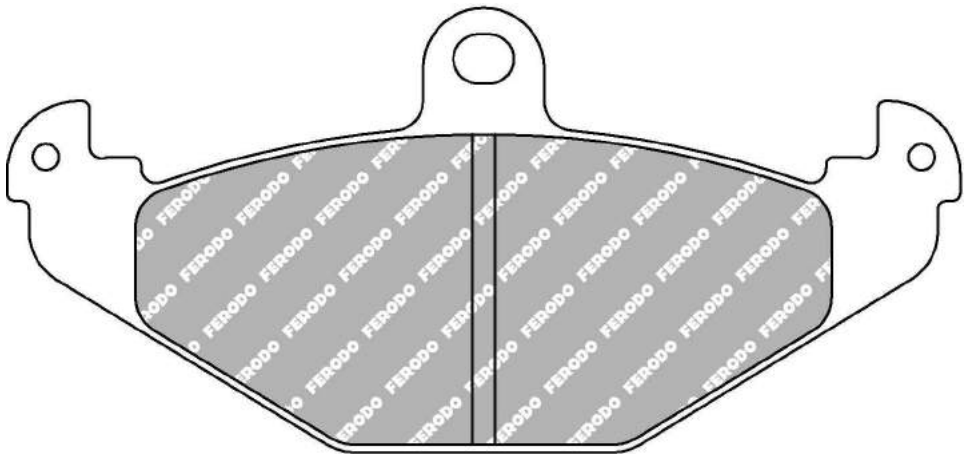

ALSO AVAILABLE		
SHAPE	TH. MM	NOTES
FCP878	14.6	

MATERIAL AVAILABILITY						
H	C	R	W	WB	Z	ZB
✔		✔	✔		✉	

CROSS REFERENCE	
AP RACING	CP3915D33
MINTEX	MDB1891
PAGID	1682
WVA	20410 12,90

✔ Available ⚠ Exhausting
✖ Out of Range ✉ Make to order
In Introduction

FERODO RACING

Updated on November 2020

FCP1561

WVA No: 23142 15,00
FMSI No: D960


119.8mm = 4.717"

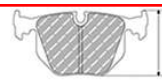
73.7mm = 2.902"


15.0mm = 0.591"


55.6mm = 2.189"

HONDA Front, MINI Front, NISSAN Front

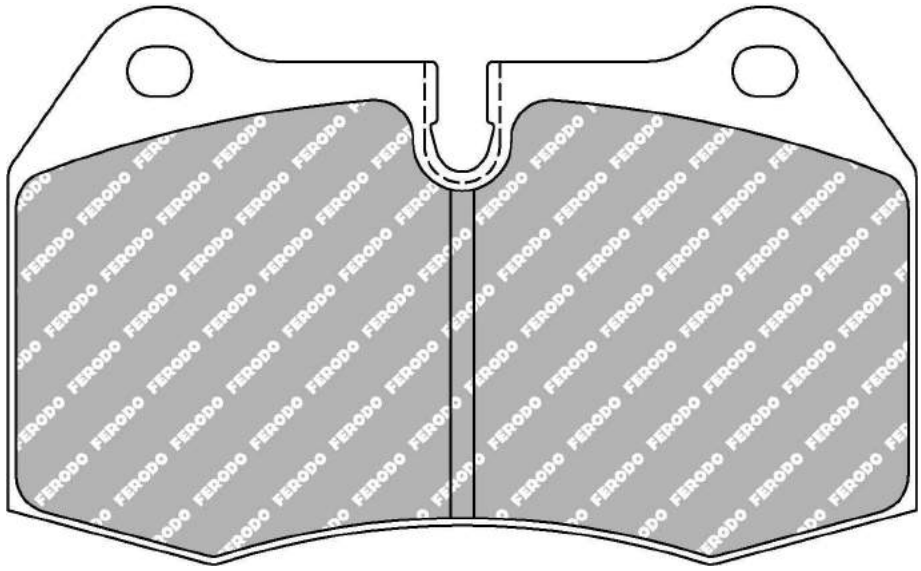

MATERIAL AVAILABILITY						
H	C	R	W	WB	Z	ZB
✔		✔	✔		✔	

CROSS REFERENCE	
CL BRAKES	4061
FMSI	D960
HAWK	HB545 0,564
MINTEX	MDB2341
PFC	0639
WVA	23142 15,00

FERODO RACING
Updated on November 2020

Available
Out of Range
In Introduction
Exhausting
Make to order

FCP1562

WVA No: 21580 14,30
FMSI No: D961



LOTUS Front, MASERATI Rear, MITSUBISHI Front / Rear, NISSAN Rear, OPEL Front, SUBARU Rear, VAUXHALL Front

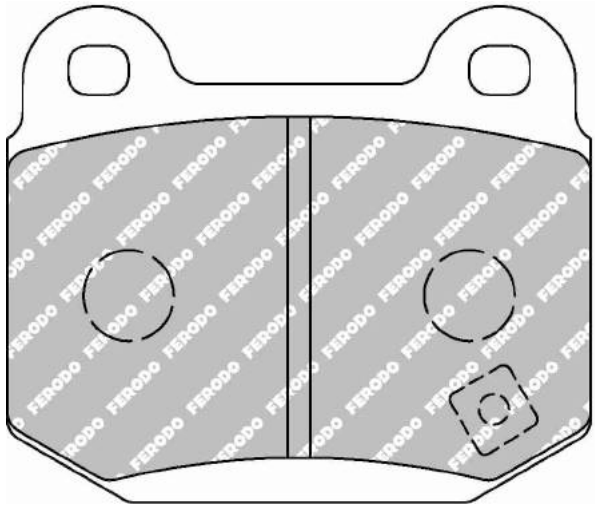

Replacing FCP1282

ALSO AVAILABLE		
SHAPE	**TH. MM**	**NOTES**
FCP116	**16.5**	**different friction area**
FRP3056		**different friction area**

MATERIAL AVAILABILITY						
H	**C**	**R**	**W**	**WB**	**Z**	**ZB**
✔	✔	✔	✔		✔	

CROSS REFERENCE	
ALCON	PNF0084X358.4
AP RACING	CP5119D50
BREMBO	07.5505.91
BREMBO	07.7858.30-40
CL BRAKES	4060
FMSI	D961
HAWK	HB180 0,56
MINTEX	MDB2342
PAGID	1587
PAGID	2593
PFC	0109
WVA	21580 14,30

FCP1563

WVA No: 24197
FMSI No: D732


121.6mm = 4.787"

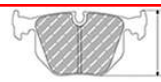
37.0mm = 1.457"


16.7mm = 0.657"


29.4mm = 1.157"

CHEVROLET Rear

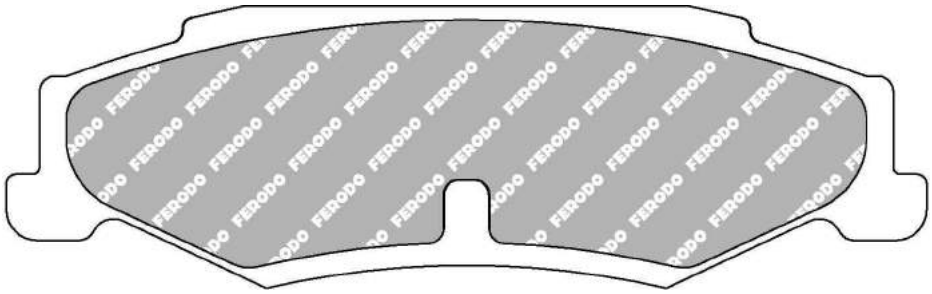

MATERIAL AVAILABILITY						
H	C	R	W	WB	Z	ZB
✉			✉		✉	

CROSS REFERENCE	
FMSI	D732
HAWK	HB248
MINTEX	MDB2214
PAGID	T1685
PFC	0732
Raybestos	DR732
SBS	3021
Wilwood	D732
WVA	24197

FERODO RACING
Updated on November 2020

Available
Out of Range
In Introduction
Exhausting
Make to order

FCP1568

FMSI No: D970



156.5mm = 6.161"
156.5mm = 6.161"

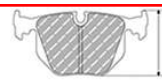

67.5mm = 2.657"
62.0mm = 2.441"



17.8mm = 0.701"
18.2mm = 0.717"



53.5mm = 2.106"
53.5mm = 2.106"

FORD Front, MERCEDES Rear

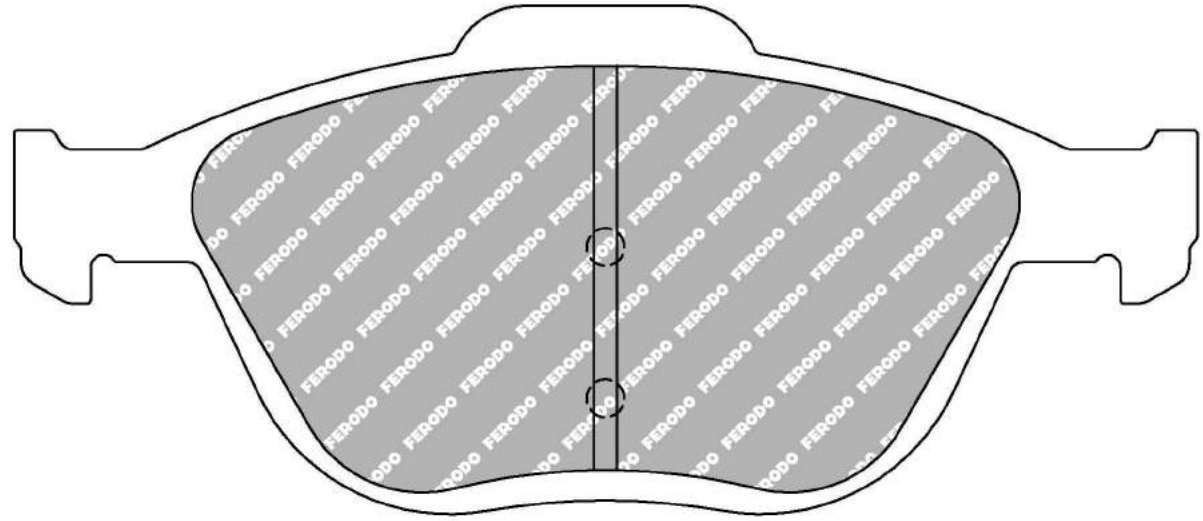

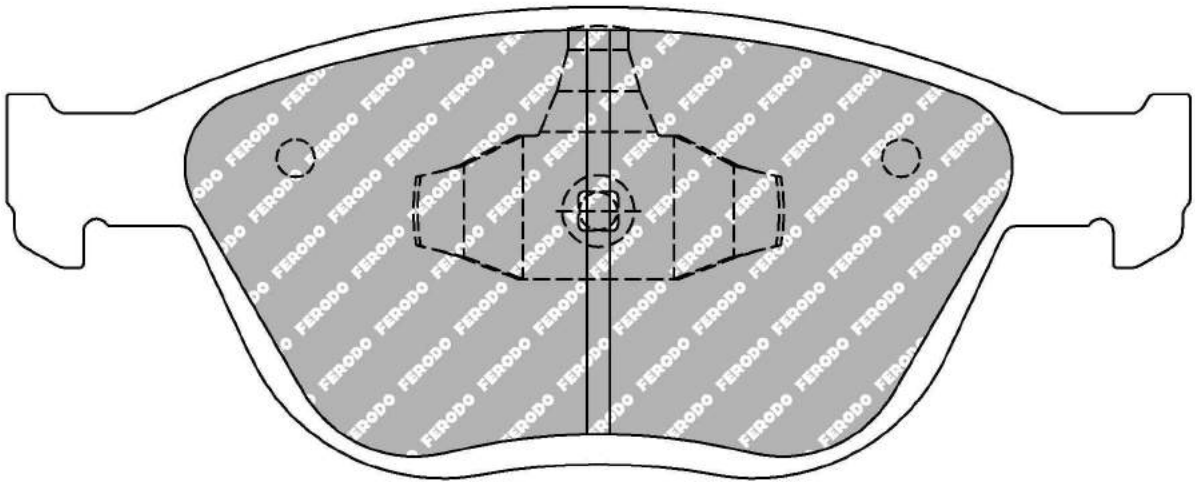

MATERIAL AVAILABILITY						
H	C	R	W	WB	Z	ZB
✔		✔				

CROSS REFERENCE	
BREMBO	07.8301.92
FMSI	D970
HAWK	HB449 0,679

✔ Available
✖ Out of Range
In Introduction
Exhausting
Make to order

FERODO RACING

Updated on November 2020

FCP1573

WVA No: 23766 17,50


131.7mm = 5.185"

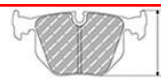
56.6mm = 2.228"


17.5mm = 0.689"


43.5mm = 1.713"

TOYOTA Front

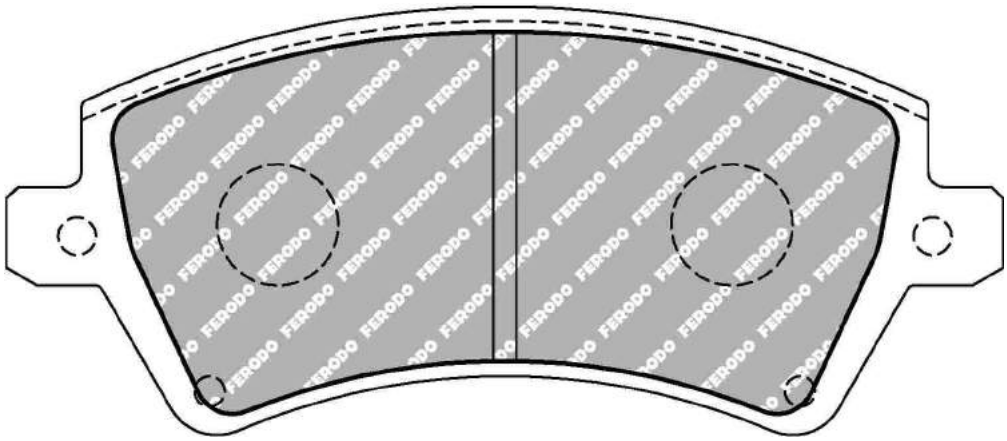

MATERIAL AVAILABILITY						
H	C	R	W	WB	Z	ZB
✔						

CROSS REFERENCE	
BREMBO	07.8301.89
MINTEX	MDB2257
WVA	23766 17,50

FCP1617

WVA No: 23973 16,80


116.4mm = 4.583"

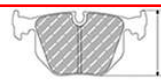
52.3mm = 2.059"


17.5mm = 0.689"


46.7mm = 1.839"

NISSAN Front, RENAULT Front, SUZUKI Front

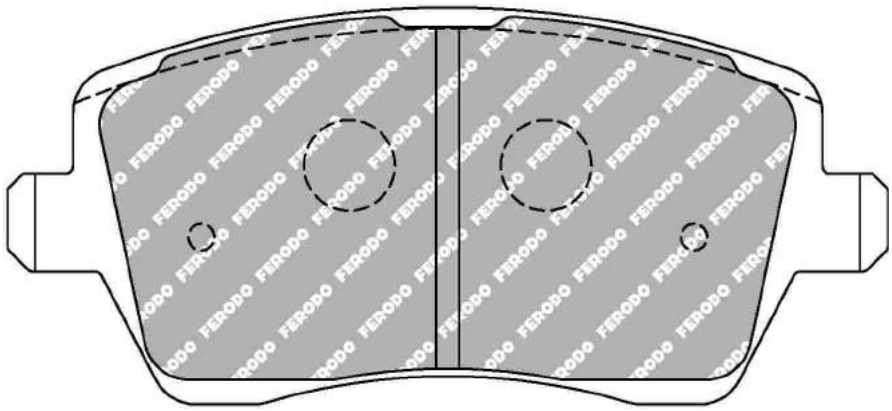

MATERIAL AVAILABILITY						
H	C	R	W	WB	Z	ZB
		✔	✉		✔	

CROSS REFERENCE	
MINTEX	MDB2595
WVA	23973 16,80

FERODO RACING

Updated on November 2020

✔ Available
✖ Out of Range
In Introduction
Exhausting
Make to order

FCP1625

WVA No: 23692



PORSCHE Front, VOLKSWAGEN Front

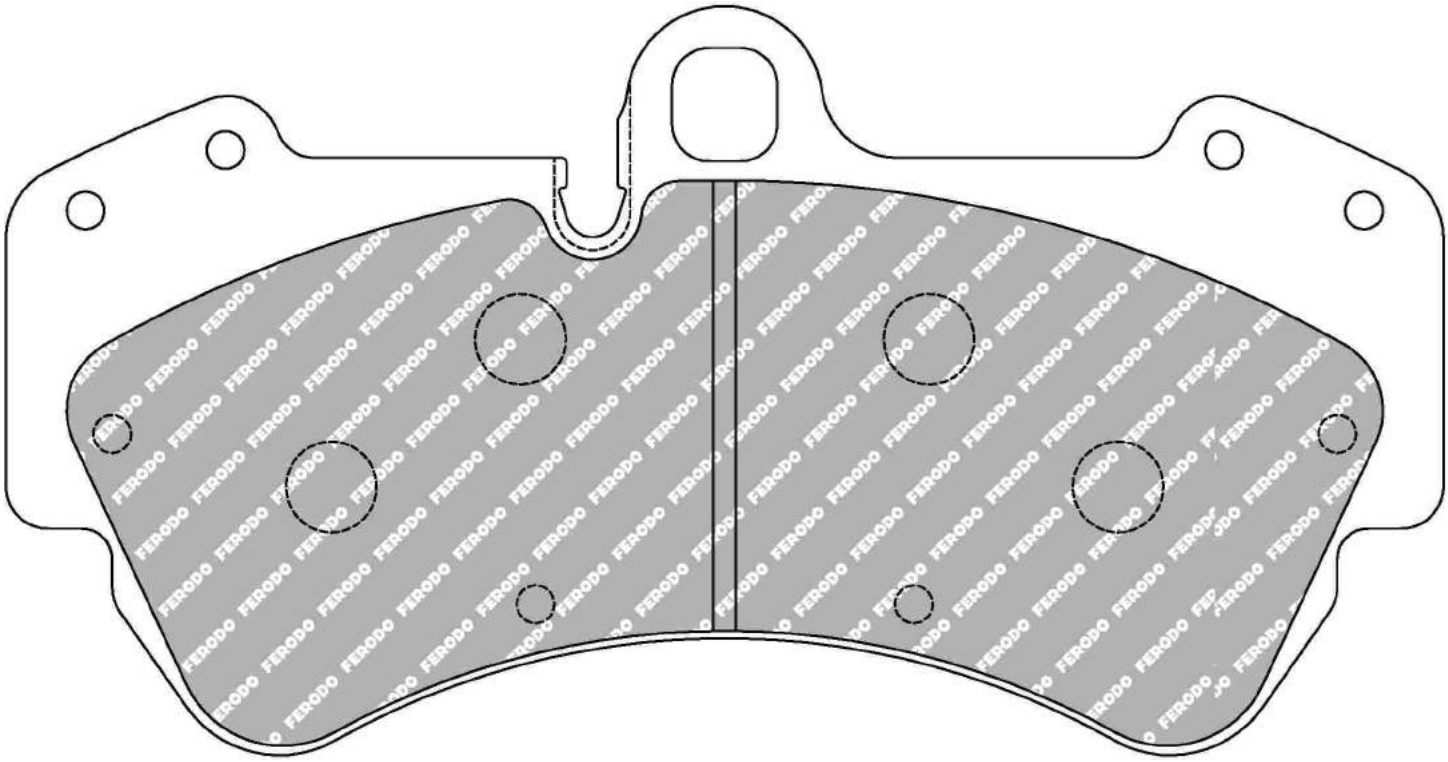

MATERIAL AVAILABILITY						
H	C	R	W	WB	Z	ZB
✔						

CROSS REFERENCE	
MINTEX	MDB2750
OE PORSCHE	955.351.939.00 / .01 / .02
OE VOLKSWAGEN	7L0698151 / B / D / H
OE VOLKSWAGEN	7L6698151 / C
WVA	23692

✔ Available
✖ Out of Range
In Introduction
Exhausting
Make to order

FERODO RACING

Updated on November 2020

FCP1626

WVA No: 23693 16,20


190.1mm = 7.484"

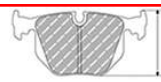
106.3mm = 4.185"


16.8mm = 0.661"


65.5mm = 2.579"

AUDI Front, PORSCHE Front, VOLKSWAGEN Front

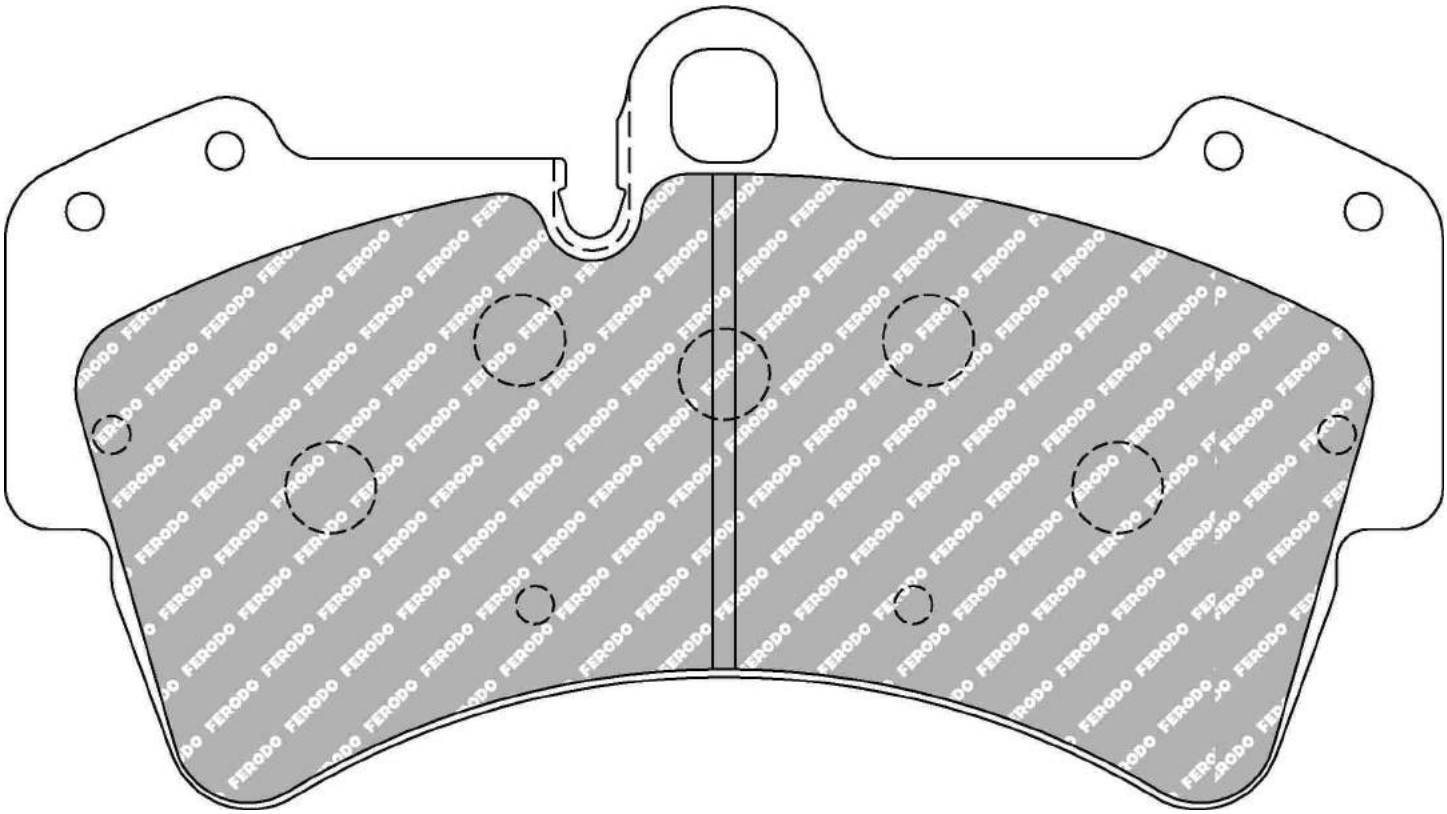

MATERIAL AVAILABILITY						
H	C	R	W	WB	Z	ZB
✔						

CROSS REFERENCE	
MINTEX	MDB2751
PAGID	2845
WVA	23693 16,20

FERODO RACING

Updated on November 2020

Available
Out of Range
In Introduction
Exhausting
Make to order

FCP1628

WVA No: 23312 20,30
FMSI No: D918


155.3mm = 6.114"


68.5mm = 2.697"


19.2mm = 0.756"


56.7mm = 2.232"

BMW Front

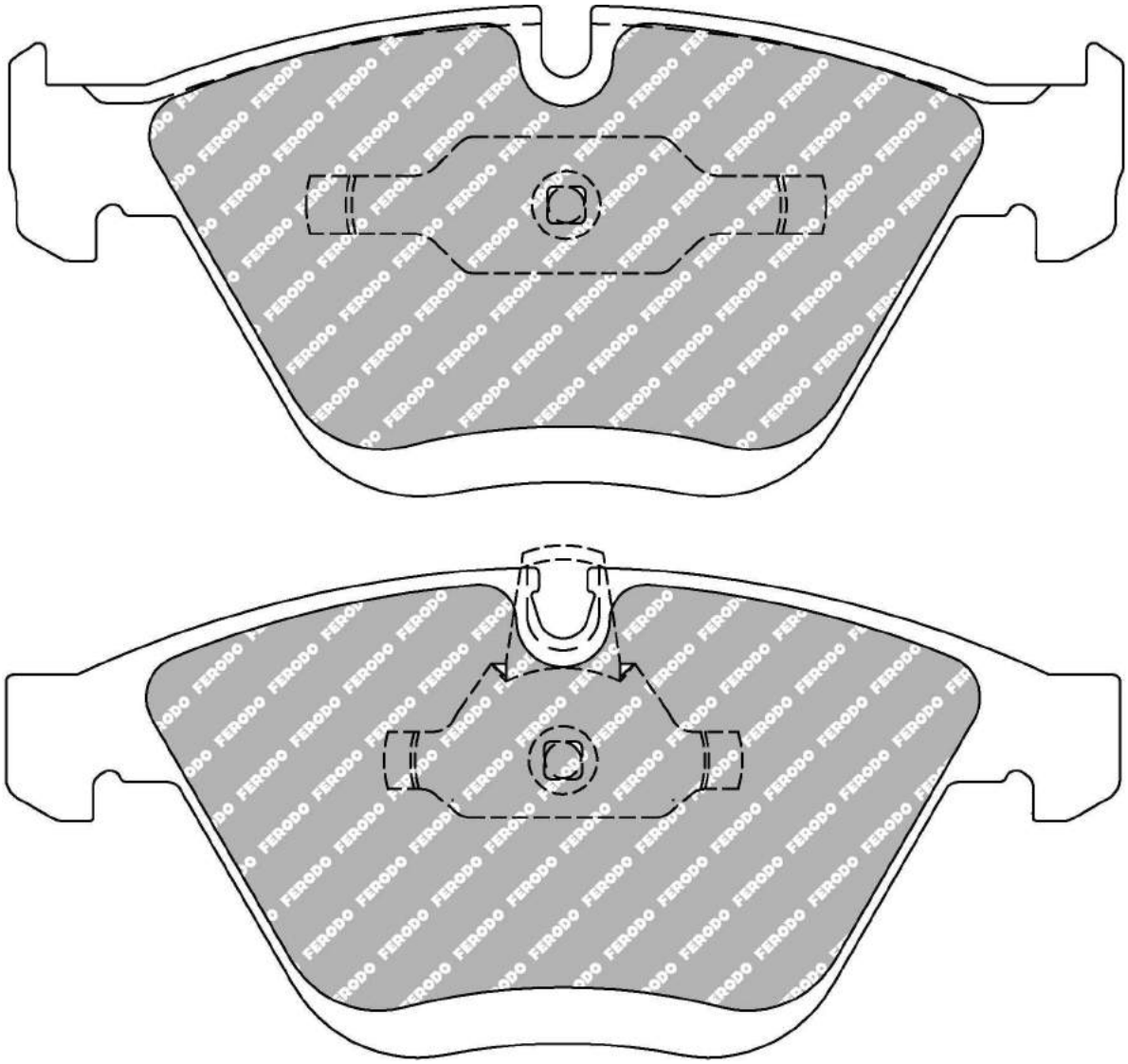

MATERIAL AVAILABILITY						
H	C	R	W	WB	Z	ZB
✔		✔	✔		✔	

CROSS REFERENCE	
ATE	13.0470-7167.2
FMSI	D918
MINTEX	MDB2418
WVA	23312 20,30

✔ Available
✖ Out of Range
In Introduction
Exhausting
Make to order

FERODO RACING

Updated on November 2020

FCP1629

WVA No: 23912 20,20 - 23801 20,2



155.3mm = 6.114"	72.8mm = 2.866"	20.3mm = 0.799"	64.4mm = 2.535"
156.5mm = 6.161"	72.8mm = 2.866"	20.3mm = 0.799"	64.4mm = 2.535"

AUDI Front

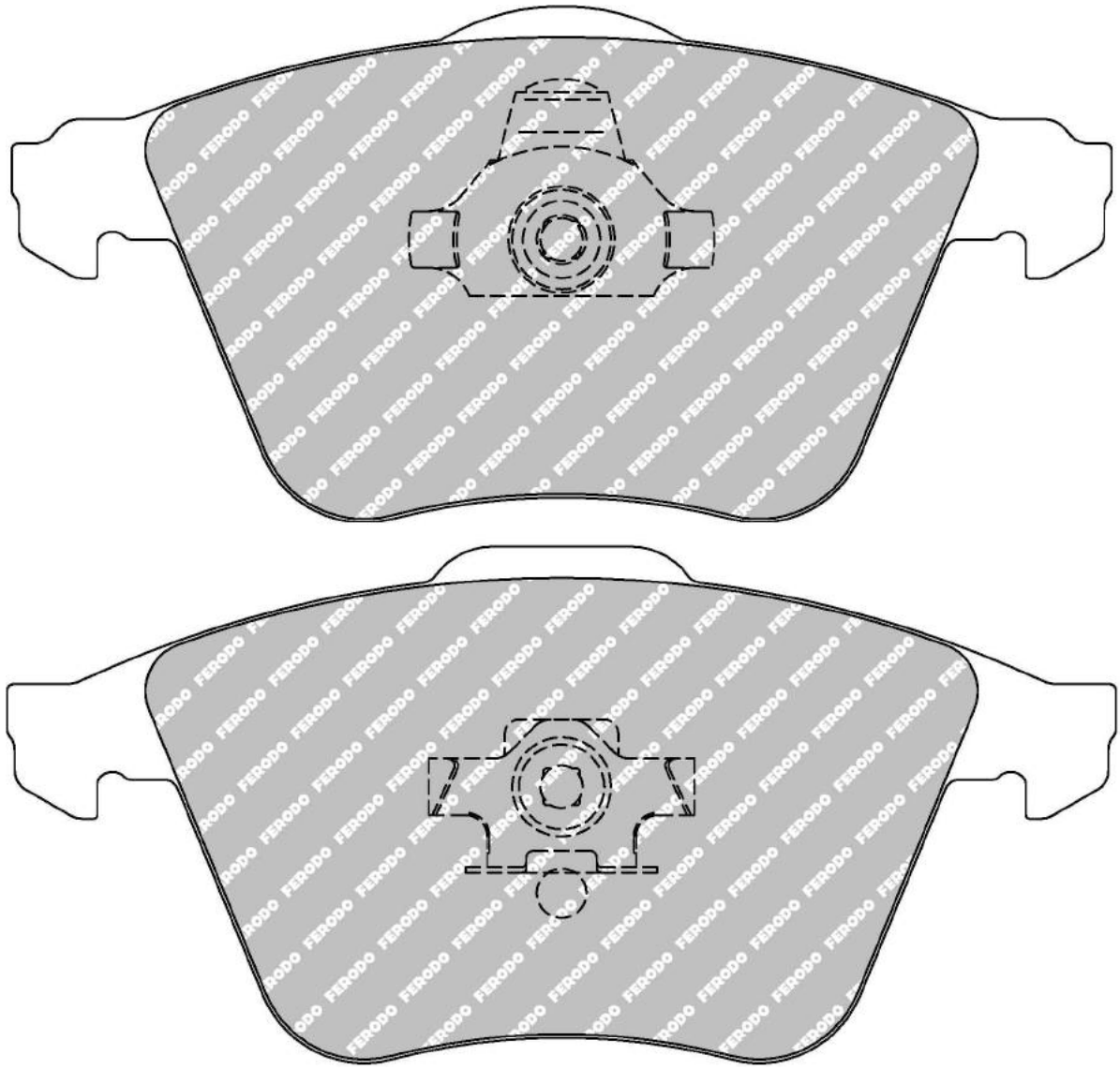

MATERIAL AVAILABILITY						
H	C	R	W	WB	Z	ZB
✔						

CROSS REFERENCE	
MINTEX	MDB2694
PAGID	8064
WVA	23912 20,20 - 23801 20,2

FERODO RACING

Updated on November 2020

Available · Out of Range · In Introduction · Exhausting · Make to order

FCP1631

WVA No: 24142 20,60 - 24141 19,10


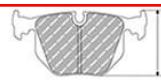



155.3mm = 6.114"	75.1mm = 2.957"	19.8mm = 0.780"	65.0mm = 2.559"
156.4mm = 6.157"	74.0mm = 2.913"	18.3mm = 0.720"	65.0mm = 2.559"

VOLVO Front

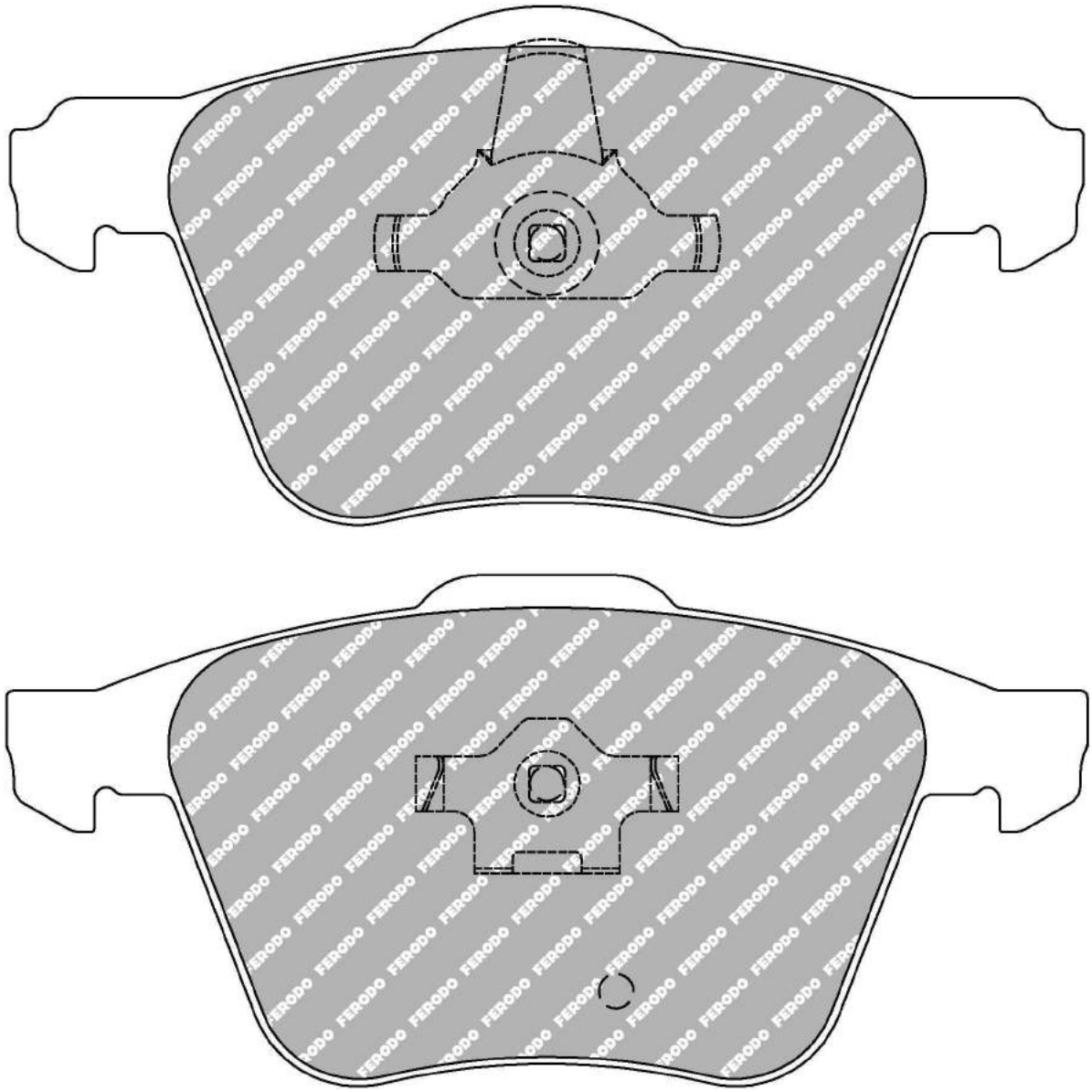

MATERIAL AVAILABILITY						
H	C	R	W	WB	Z	ZB

CROSS REFERENCE	
MINTEX	MDB2576
MINTEX	MDB2789
WVA	24142 20,60 - 24141 19,10

Available
Out of Range
In Introduction
Exhausting
Make to order

FERODO RACING

Updated on November 2020

FCP1636

WVA No: 23914 16,90
FMSI No: D1108


105.3mm = 4.146"

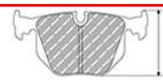
55.5mm = 2.185"


17.1mm = 0.673"


47.0mm = 1.850"

AUDI Rear, SEAR Rear, SEAT Rear, SKODA Rear, VOLKSWAGEN Rear

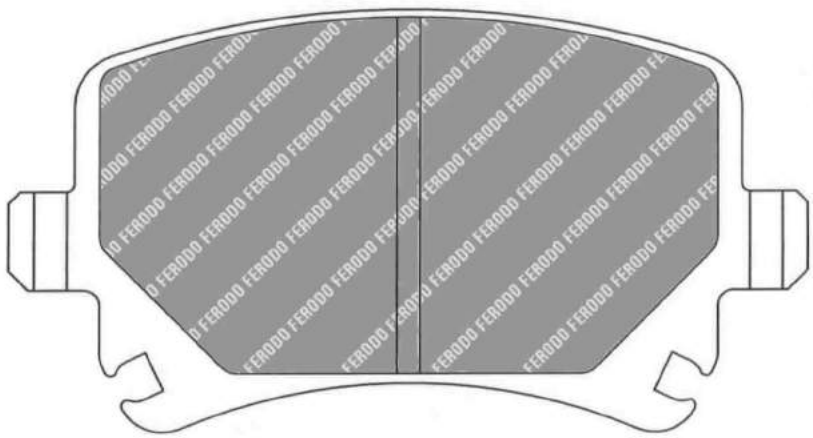

MATERIAL AVAILABILITY						
H	C	R	W	WB	Z	ZB
✓		✉				

CROSS REFERENCE	
ALCON	PNF0084X363.4
FMSI	D1108
HAWK	HB544 0,628
MINTEX	MDB2580
PAGID	8046
PAGID	T2454
WVA	23914 16,90

FCP1639


137.5mm = 5.413"

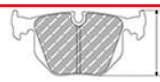
56.8mm = 2.236"


17.6mm = 0.693"


50.1mm = 1.972"

FMSI No: D929

SCION Front, SUBARU Front, TOYOTA Front

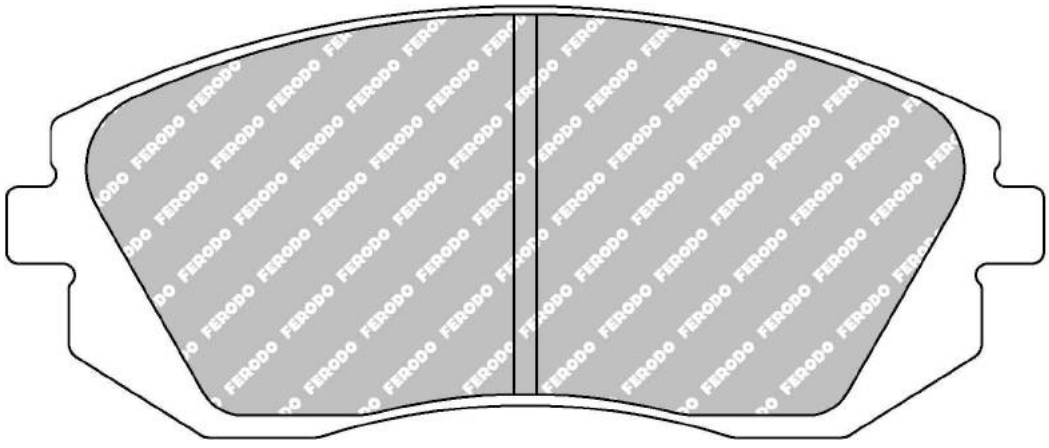

MATERIAL AVAILABILITY						
H	C	R	W	WB	Z	ZB
✓			✓		✓	

CROSS REFERENCE	
FMSI	D929
HAWK	HB432 0,661
MINTEX	MDB2274
PAGID	8174

FERODO RACING
Updated on November 2020

Available
Out of Range
In Introduction
Exhausting
Make to order

FCP1640

WVA No: 23832 20,40



155.1mm = 6.106"
155.1mm = 6.106"

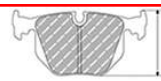

69.5mm = 2.736"
76.3mm = 3.004"



20.4mm = 0.803"
20.4mm = 0.803"



55.4mm = 2.181"
55.4mm = 2.181"

HOLDEN Front, OPEL Front, VAUXHALL Front

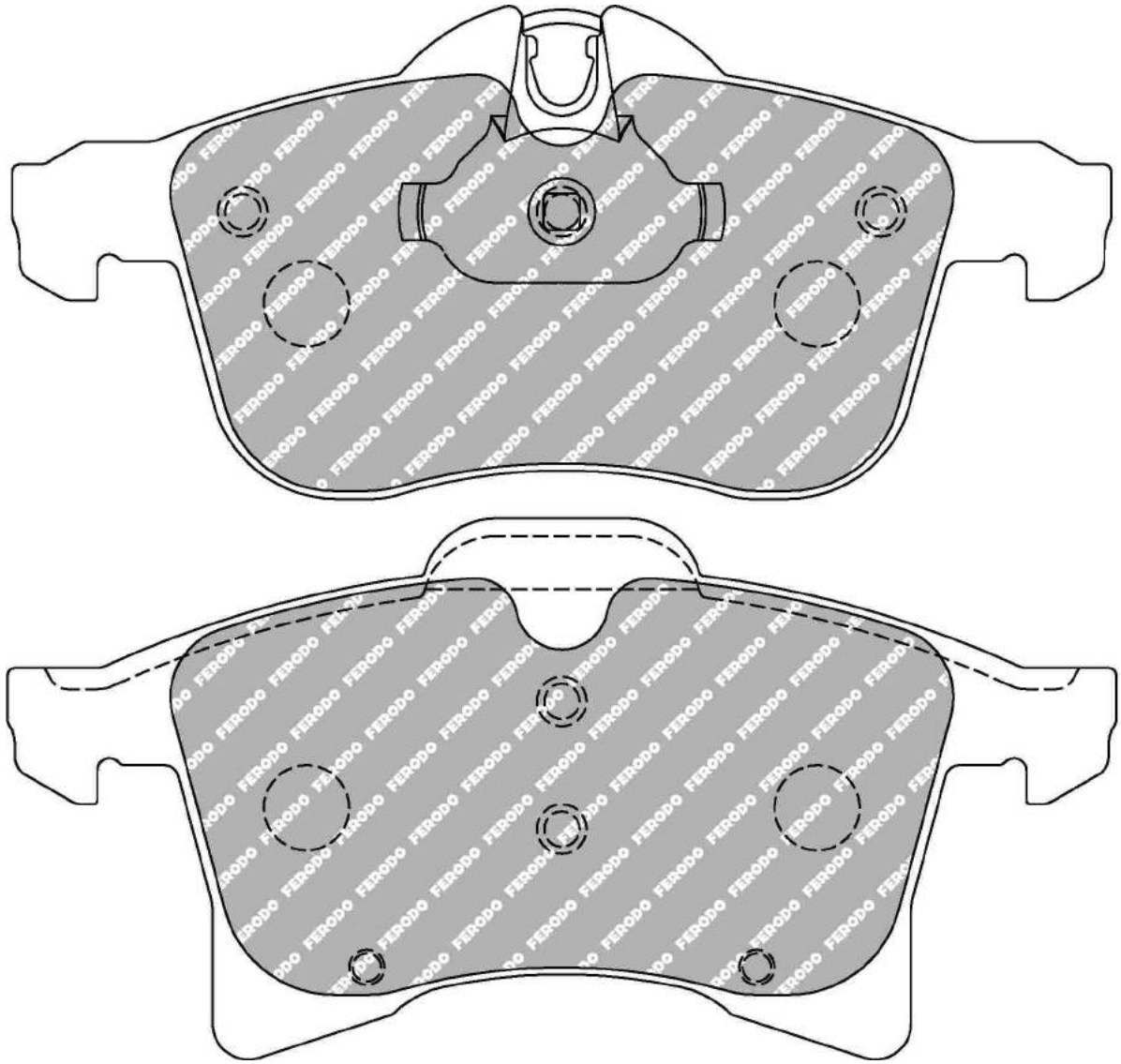

MATERIAL AVAILABILITY						
H	C	R	W	WB	Z	ZB
✔			✉		✉	

CROSS REFERENCE	
MINTEX	MDB2633
WVA	23832 20,40

✔ Available
✖ Out of Range
In Introduction
Exhausting
Make to order

FERODO RACING

Updated on November 2020

FCP1641

WVA No: 23587 20,30
FMSI No: D1107



156.5mm = 6.161"
155.2mm = 6.110"

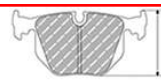

71.4mm = 2.811"
66.0mm = 2.598"



19.4mm = 0.764"
19.4mm = 0.764"



61.0mm = 2.402"
61.0mm = 2.402"

AUDI Front, CITROEN Front, PEUGEOT Front, PORSCHE Front, SEAT Front, SKODA Front, VOLKSWAGEN Front

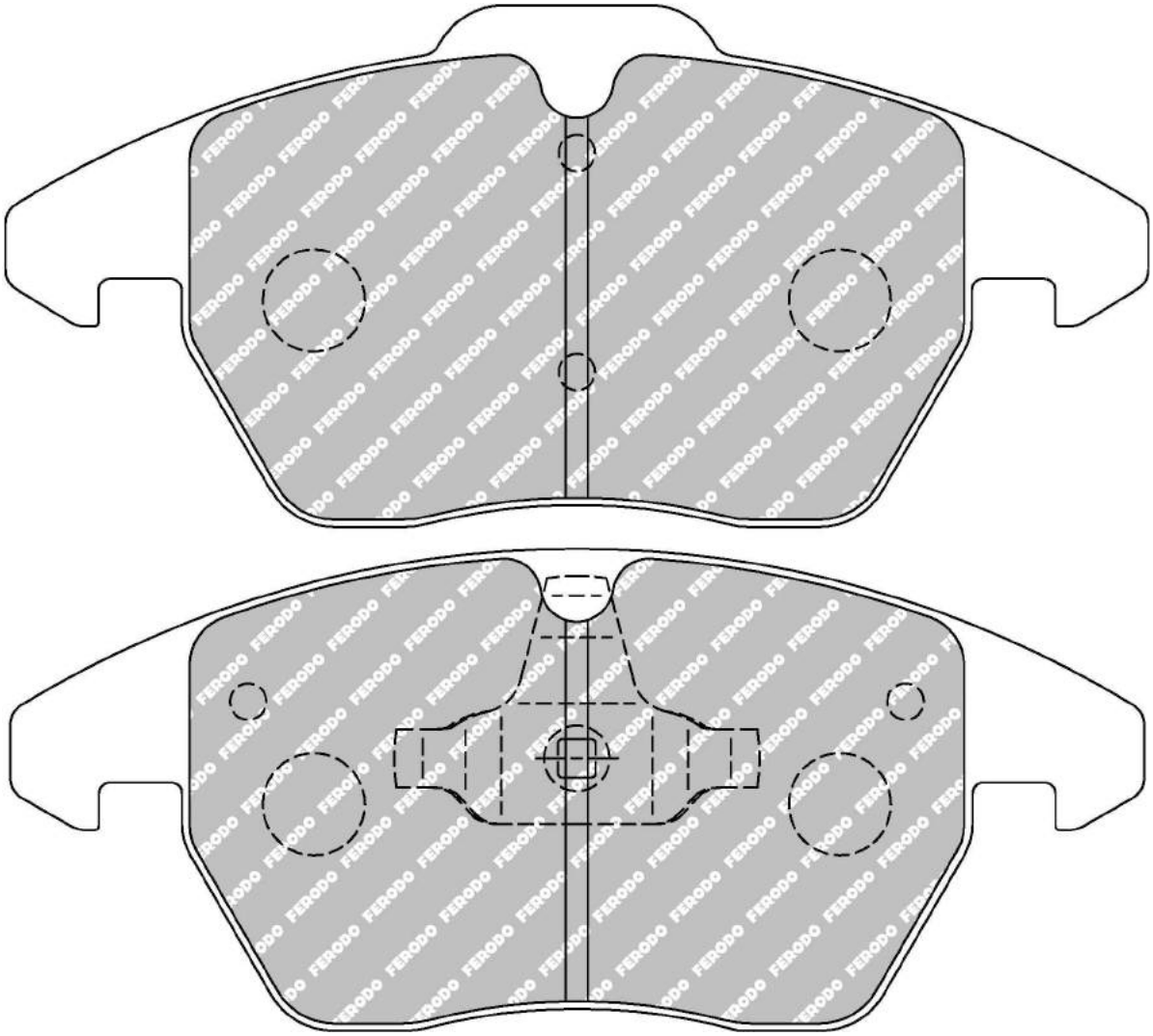

MATERIAL AVAILABILITY						
H	C	R	W	WB	Z	ZB
✔		✉	✔		✔	

CROSS REFERENCE	
FMSI	D1107
HAWK	HB543 0,76
MINTEX	MDB2604
OE VOLKSWAGEN	8X0698151
PAGID	8001
PAGID	T1376
PAGID	T2444
WVA	23587 20,30

FERODO RACING
Updated on November 2020

✔ Available
✖ Out of Range
In Introduction
Exhausting
Make to order

FCP1655

WVA No: 23326
FMSI No: D1018

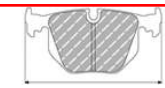
116.2mm = 4.575"

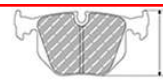
59.0mm = 2.323"


17.5mm = 0.689"


47.0mm = 1.850"

AUDI Rear

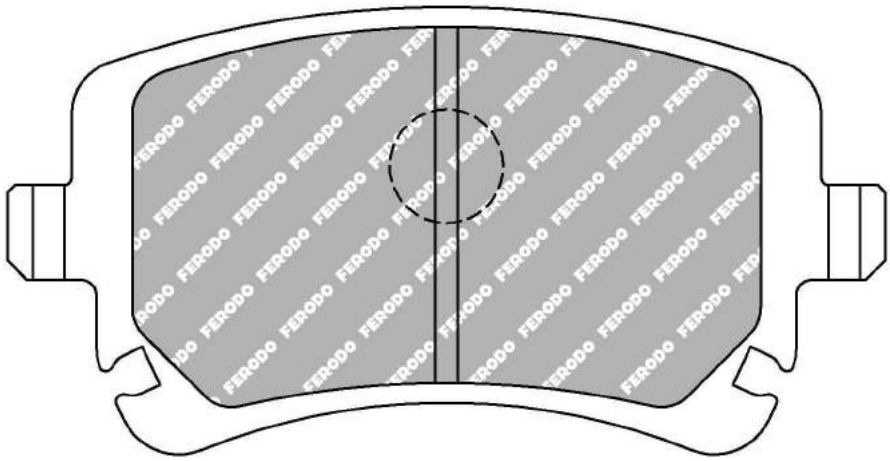

MATERIAL AVAILABILITY						
H	C	R	W	WB	Z	ZB
✔						

CROSS REFERENCE	
FMSI	D1018
MINTEX	MDB2544
MINTEX	MDB3086
PAGID	8039
WVA	23326

FCP1661

WVA No: 23745 - 23271 17,70
FMSI No: D847


119.6mm = 4.709"

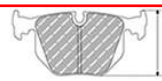
71.4mm = 2.811"


16.9mm = 0.665"


50.8mm = 2.000"

MERCEDES Front

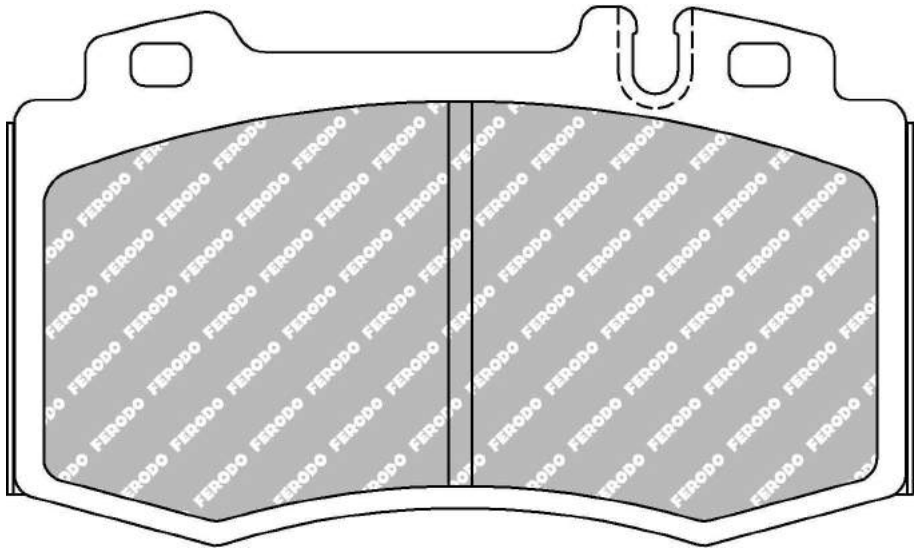

MATERIAL AVAILABILITY						
H	C	R	W	WB	Z	ZB
✔						

CROSS REFERENCE	
FMSI	D847
MINTEX	MDB2064
MINTEX	MDB2598
WVA	23745 - 23271 17,70

FCP1664

WVA No: 23764 17,00
FMSI No: D1029


95.4mm = 3.756"

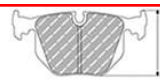
74.3mm = 2.925"


17.0mm = 0.669"


56.5mm = 2.224"

AUDI Front / Rear, LAMBORGHINI Front, VOLKSWAGEN Front

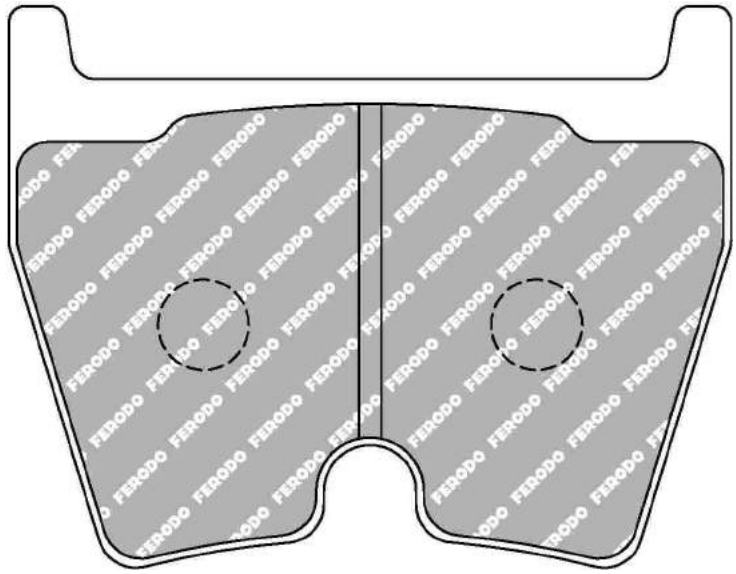

4 Pistons caliper

(1 set = 4 pads) - 2 sets per axle for the recommended applications

MATERIAL AVAILABILITY						
H	C	R	W	WB	Z	ZB
✔		✔	✔		✉	

CROSS REFERENCE	
BREMBO	07.9312.44
BREMBO	07.9312.45
BREMBO	07.9312.46
BREMBO	07.9312.47
FMSI	D1029
HAWK	HB609 0,572
MINTEX	MDB2601
PAGID	2931
Raybestos	DR1029
WVA	23764 17,00

FERODO RACING

Updated on November 2020

✔ Available
✖ Out of Range
In Introduction
⚠ Exhausting
✉ Make to order

FCP1667

WVA No: 24764 17,00
FMSI No: D1651


124.8mm = 4.913"

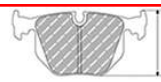
70.7mm = 2.783"


15.5mm = 0.610"


52.1mm = 2.051"

ABARTH Front, ALFA ROMEO Front, OPEL Front, RENAULT Front, RENAULT-ALPINE Front

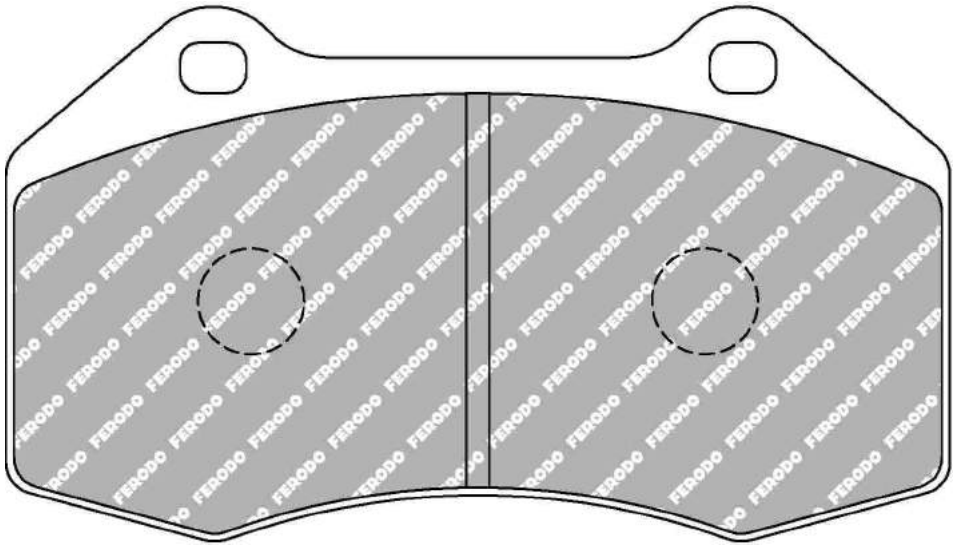

ALSO AVAILABLE		
SHAPE	TH. MM	NOTES
FCP4821	13.8	

MATERIAL AVAILABILITY						
H	C	R	W	WB	Z	ZB
✔		✔	✔		✔	✔

CROSS REFERENCE	
BREMBO	B6315
FMSI	D1651
MINTEX	MDB2725
PAGID	8023
PFC	7871-07-16-44
Raybestos	DR593
WVA	24764 17,00

✔ Available
✖ Out of Range
In Introduction
Exhausting
Make to order

FERODO RACING

Updated on November 2020

FCP1672

WVA No: 23309 17,00
FMSI No: D919



139.8mm = 5.504"
139.8mm = 5.504"

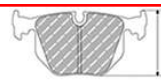

67.8mm = 2.669"
66.9mm = 2.634"



16.1mm = 0.634"
16.1mm = 0.634"



64.5mm = 2.539"
64.5mm = 2.539"

BMW Rear

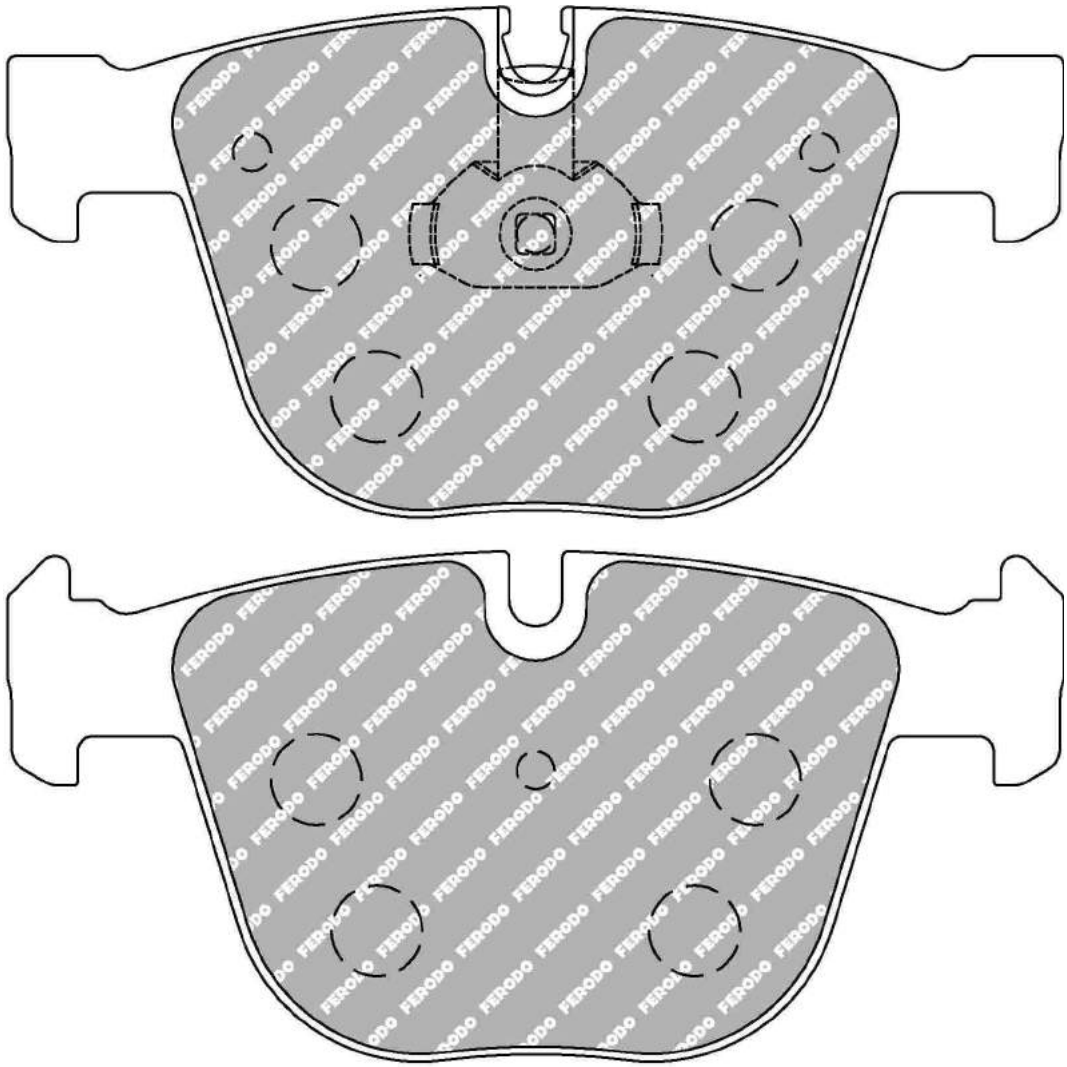

MATERIAL AVAILABILITY						
H	C	R	W	WB	Z	ZB
✔			✉		✔	

CROSS REFERENCE	
FMSI	D919
MINTEX	MDB2419
MINTEX	MDB2765
PAGID	8021
WVA	23309 17,00

FERODO RACING

Updated on November 2020

Available
Out of Range
In Introduction
Exhausting
Make to order

FCP1676

WVA No: 23716 16,40
FMSI No: D940


123.2mm = 4.850"

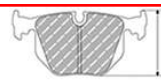
43.9mm = 1.728"


15.9mm = 0.626"


32.5mm = 1.280"

HONDA Rear, MINI Rear

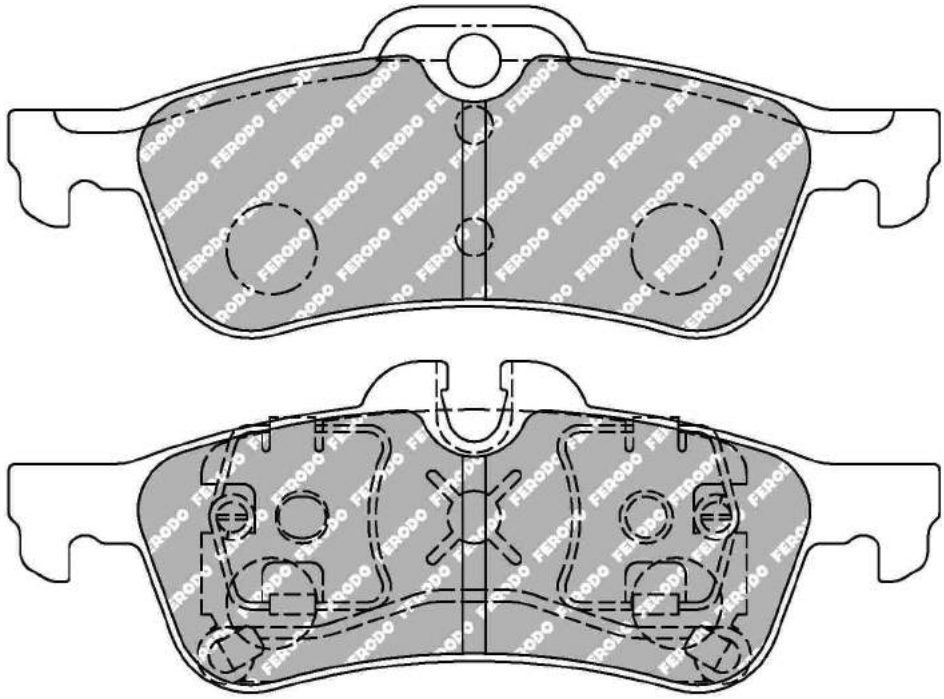

Replacing FCP1500

MATERIAL AVAILABILITY						
H	C	R	W	WB	Z	ZB
✔						

CROSS REFERENCE	
BREMBO	07.8301.21
FMSI	D940
HAWK	HB445 0,61
MINTEX	MDB2639
WVA	23716 16,40

✔ Available
✖ Out of Range
In Introduction
Exhausting
Make to order

FERODO RACING

Updated on November 2020

FCP1690


157.1mm = 6.185"

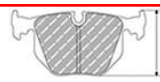
58.5mm = 2.303"


16.8mm = 0.661"


48.1mm = 1.894"

FMSI No: D888

INFINITI Front, NISSAN Front

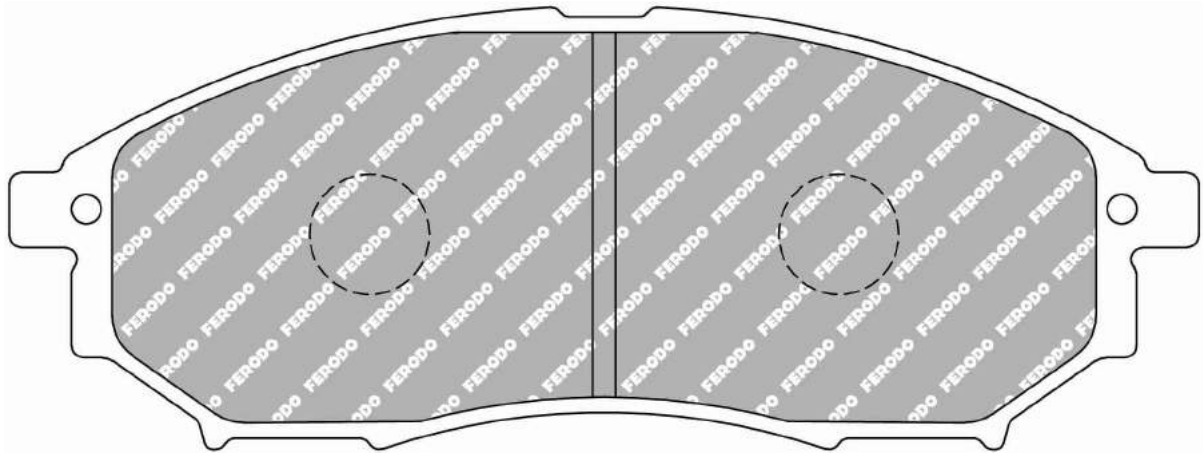

MATERIAL AVAILABILITY						
H	C	R	W	WB	Z	ZB
✔						

CROSS REFERENCE	
FMSI	D888
HAWK	HB387 0,547
MINTEX	MDB2247

FCP1693


105.6mm = 4.157"

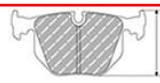
38.2mm = 1.504"


14.1mm = 0.555"


29.9mm = 1.177"

WVA No: 23871 14,00

FMSI No: D905

INFINITI Rear, NISSAN Rear

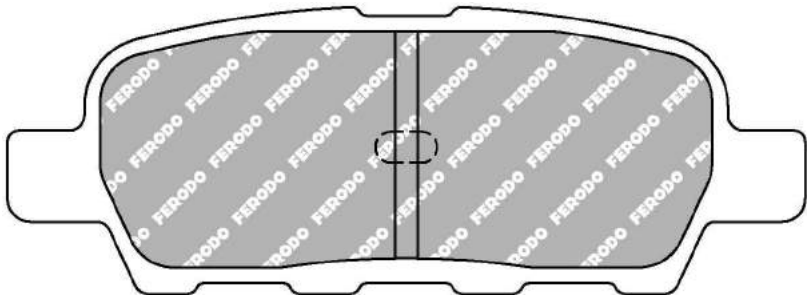

MATERIAL AVAILABILITY						
H	C	R	W	WB	Z	ZB
✔						

CROSS REFERENCE	
FMSI	D905
HAWK	HB370 0,559
MINTEX	MDB2261
WVA	23871 14,00

FERODO RACING

Updated on November 2020

Available
Out of Range
In Introduction
Exhausting
Make to order

FCP1698

WVA No: 24024
FMSI No: D976


134.45mm = 5.293"

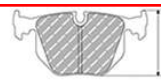
77.5mm = 3.051"


17mm = 0.669"


50.5mm = 1.988"

LEXUS Front, MITSUBISHI Front, TOYOTA Front

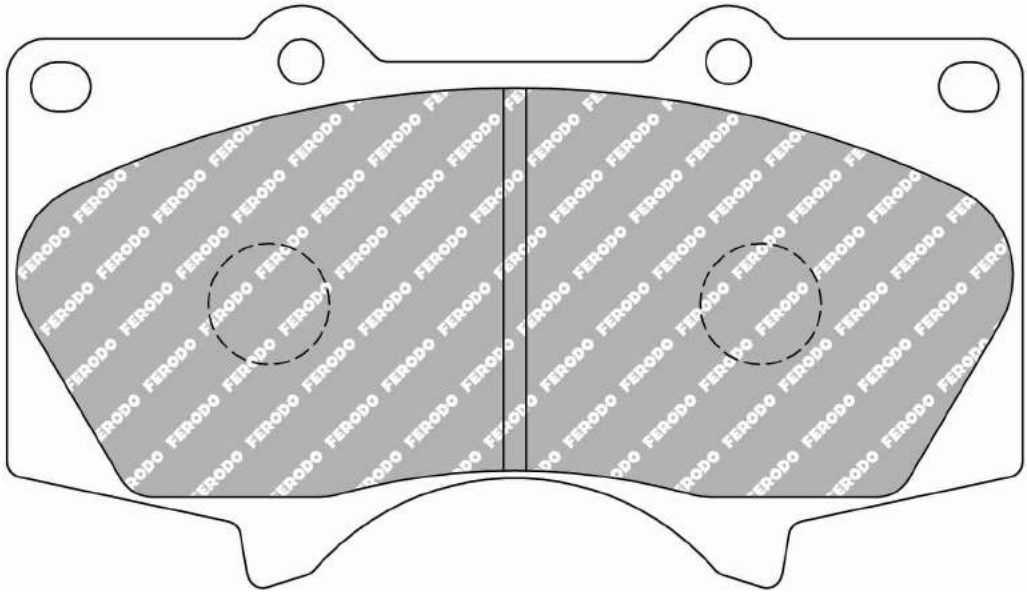

MATERIAL AVAILABILITY						
H	C	R	W	WB	Z	ZB
✔						

CROSS REFERENCE	
BREMBO	P83 066
EBC	DP41657
FMSI	D976
WVA	24024

✔ Available
✖ Out of Range
In Introduction
Exhausting
Make to order

FERODO RACING

Updated on November 2020

FCP1706

WVA No: 23912 18,50 - 23801 18,50


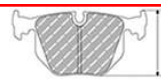



155.3mm = 6.114"	72.9mm = 2.870"	18.0mm = 0.709"	64.4mm = 2.535"
156.5mm = 6.161"	72.9mm = 2.870"	18.0mm = 0.709"	64.4mm = 2.535"

FORD Front, MAZDA Front, SAAB Front, VOLVO Front

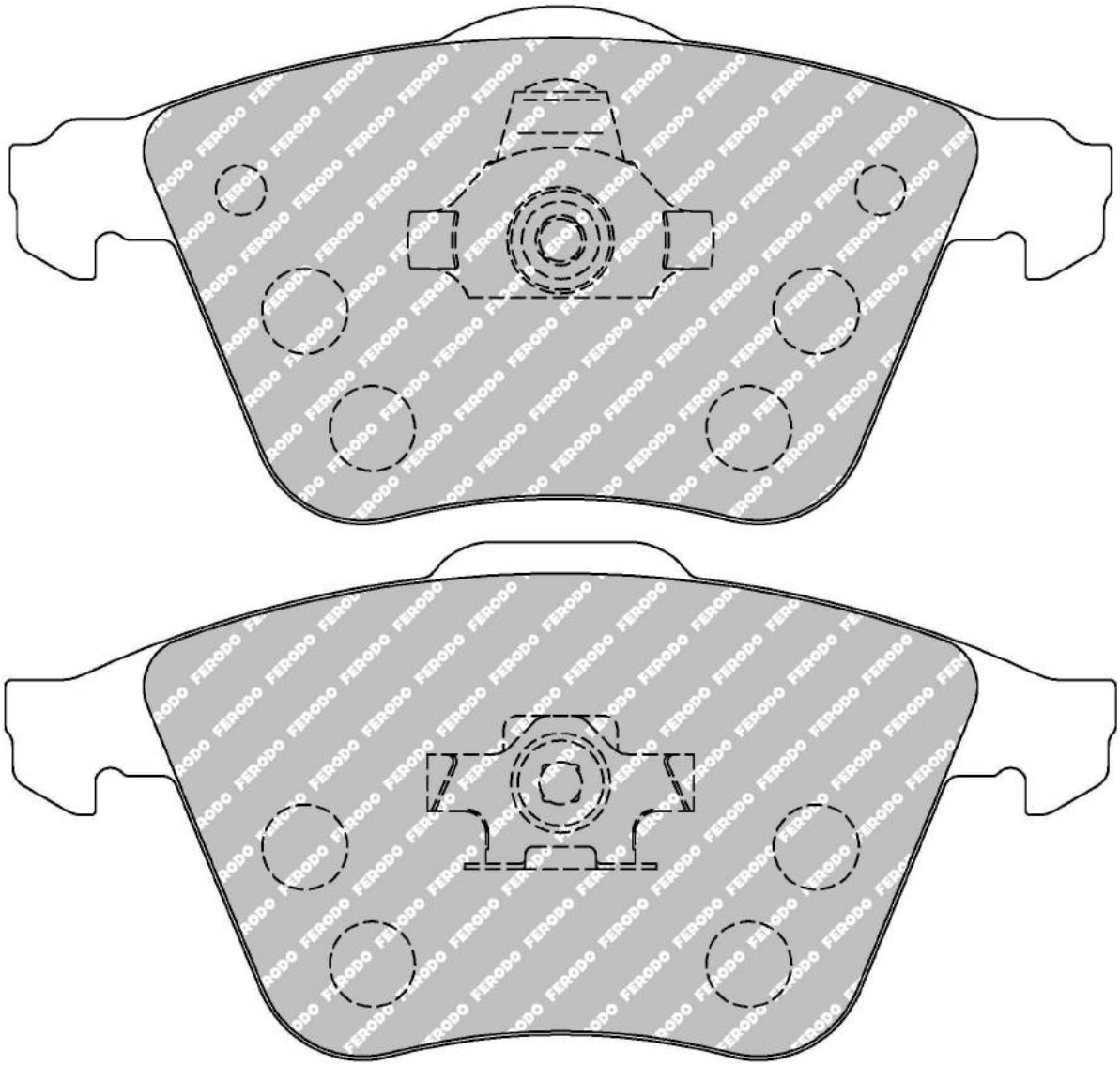

MATERIAL AVAILABILITY						
H	C	R	W	WB	Z	ZB
✔			✉			

CROSS REFERENCE	
MINTEX	MDB2749
WVA	23912 18,50 - 23801 18,50

FERODO RACING

Updated on November 2020

✔ Available
✖ Out of Range
In Introduction
Exhausting
Make to order

FCP1717

WVA No: 20676 20,10



156.5mm = 6.161"
156.5mm = 6.161"

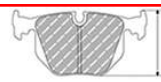

74.4mm = 2.929"
74.4mm = 2.929"



20.1mm = 0.791"
20.1mm = 0.791"



61.0mm = 2.402"
61.0mm = 2.402"

AUDI Front, SEAT Front, SKODA Front, VOLKSWAGEN Front

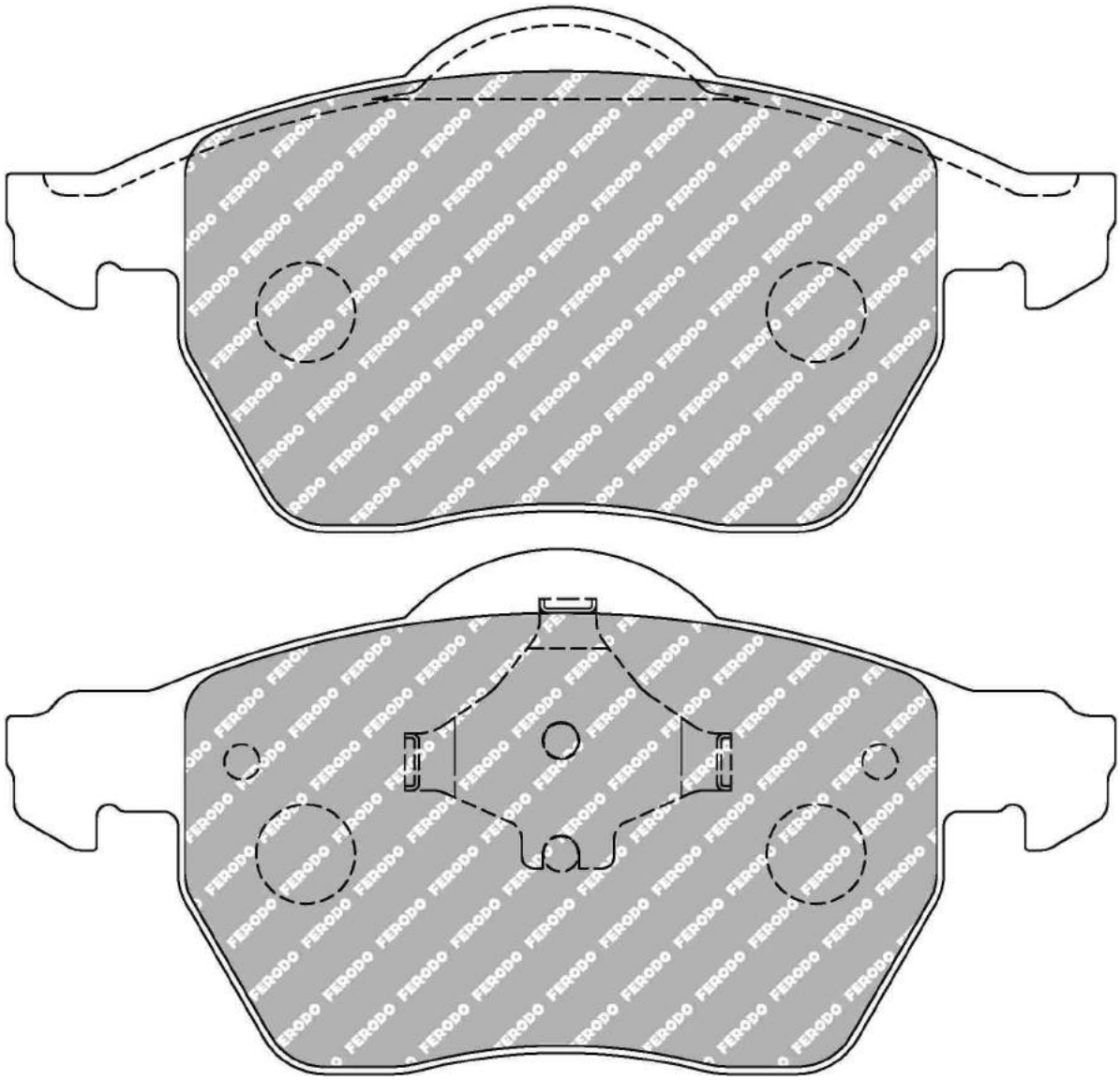

MATERIAL AVAILABILITY						
H	C	R	W	WB	Z	ZB
✔						

CROSS REFERENCE	
MINTEX	MDB2231
WVA	20676 20,10

✔ Available
✘ Out of Range
In Introduction
Exhausting
Make to order

FERODO RACING

Updated on November 2020

FCP1725


131.5mm = 5.177"

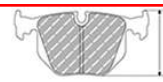
66.9mm = 2.634"


19.0mm = 0.748"


53.5mm = 2.106"

PEUGEOT Front

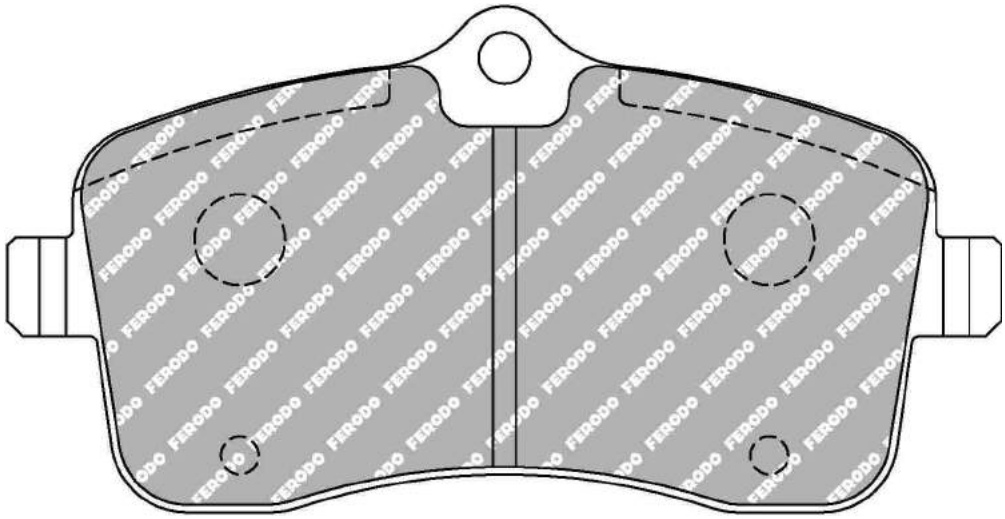

MATERIAL AVAILABILITY						
H	C	R	W	WB	Z	ZB
✉		✉	✉		✉	

CROSS REFERENCE	
MINTEX	MDB2701

FERODO RACING

Updated on November 2020

Available
Out of Range
In Introduction
Exhausting
Make to order

FCP1747

WVA No: 23915 17,60 - 23916 17,60
FMSI No: D1308



131.4mm = 5.173"	56.3mm = 2.217"	17.0mm = 0.669"	45.6mm = 1.795"
131.4mm = 5.173"	65.0mm = 2.559"	17.0mm = 0.669"	45.6mm = 1.795"

BMW Front, MINI Front

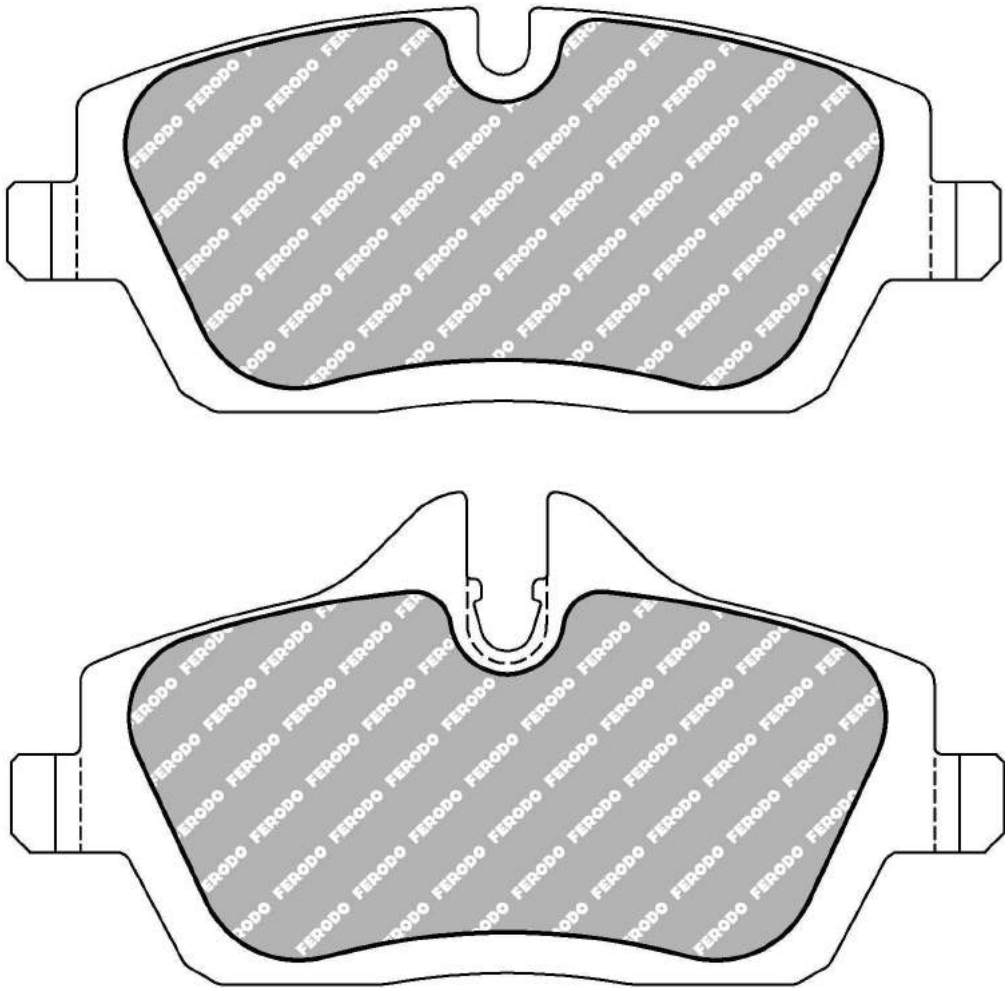

MATERIAL AVAILABILITY						
H	C	R	W	WB	Z	ZB
✔						

CROSS REFERENCE	
FMSI	D1308
HAWK	HB570 .677
MINTEX	MDB2682
WVA	23915 17,60 - 23916 17,60

✔ Available
✖ Out of Range
In Introduction
Exhausting
Make to order

FERODO RACING

Updated on November 2020

FCP1751

WVA No: 23935 17,60



149.4mm = 5.882"
150.3mm = 5.917"

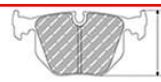

57.5mm = 2.264"
57.5mm = 2.264"



17.6mm = 0.693"
17.6mm = 0.693"



51.6mm = 2.031"
51.6mm = 2.031"

BMW Front

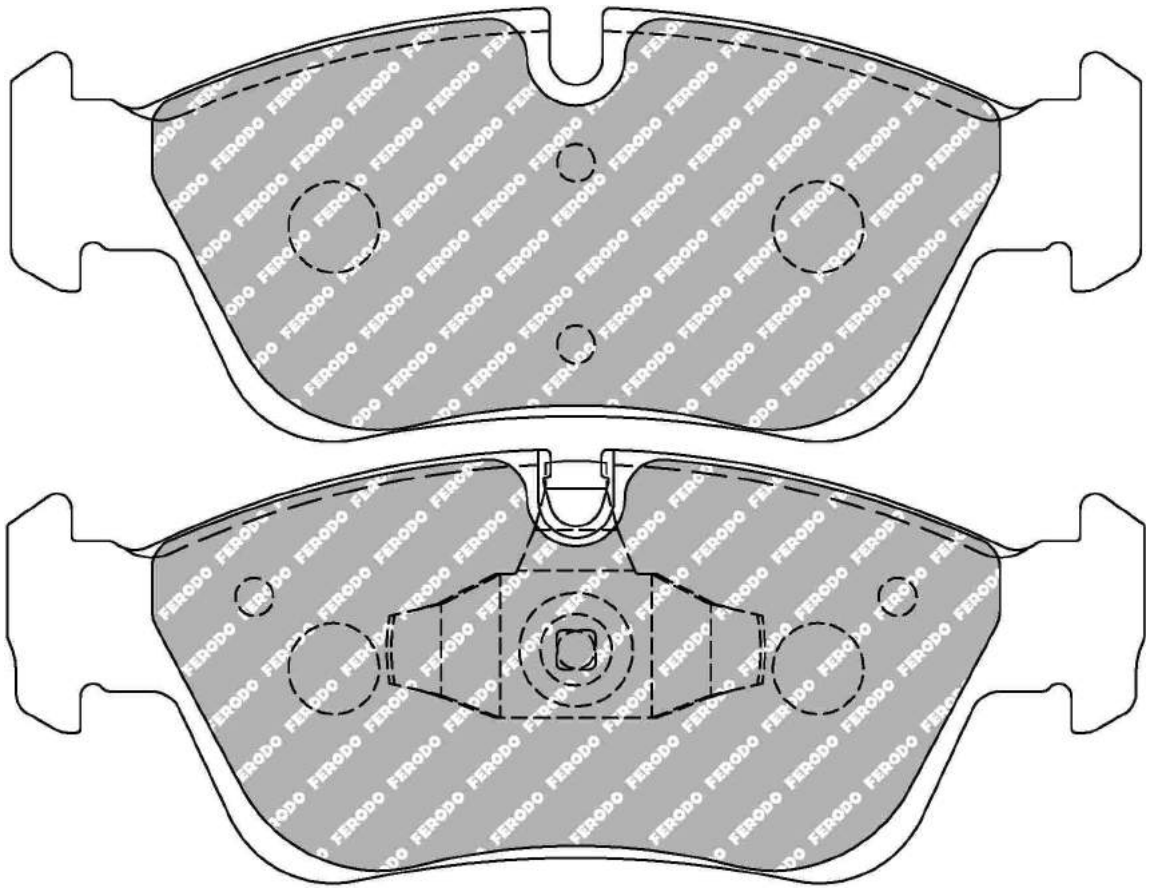

MATERIAL AVAILABILITY						
H	C	R	W	WB	Z	ZB
✉		✉				

CROSS REFERENCE	
MINTEX	MDB2684
WVA	23935 17,60

FERODO RACING

Updated on November 2020

Available
Out of Range
In Introduction
Exhausting
Make to order

FCP1765

WVA No: 23912 20,20 - 23801 20,2



155.3mm = 6.114"	72.9mm = 2.870"	20.3mm = 0.799"	64.4mm = 2.535"
156.5mm = 6.161"	72.9mm = 2.870"	20.3mm = 0.799"	64.4mm = 2.535"

AUDI Front, SEAT Front, SKODA Front, VOLKSWAGEN Front

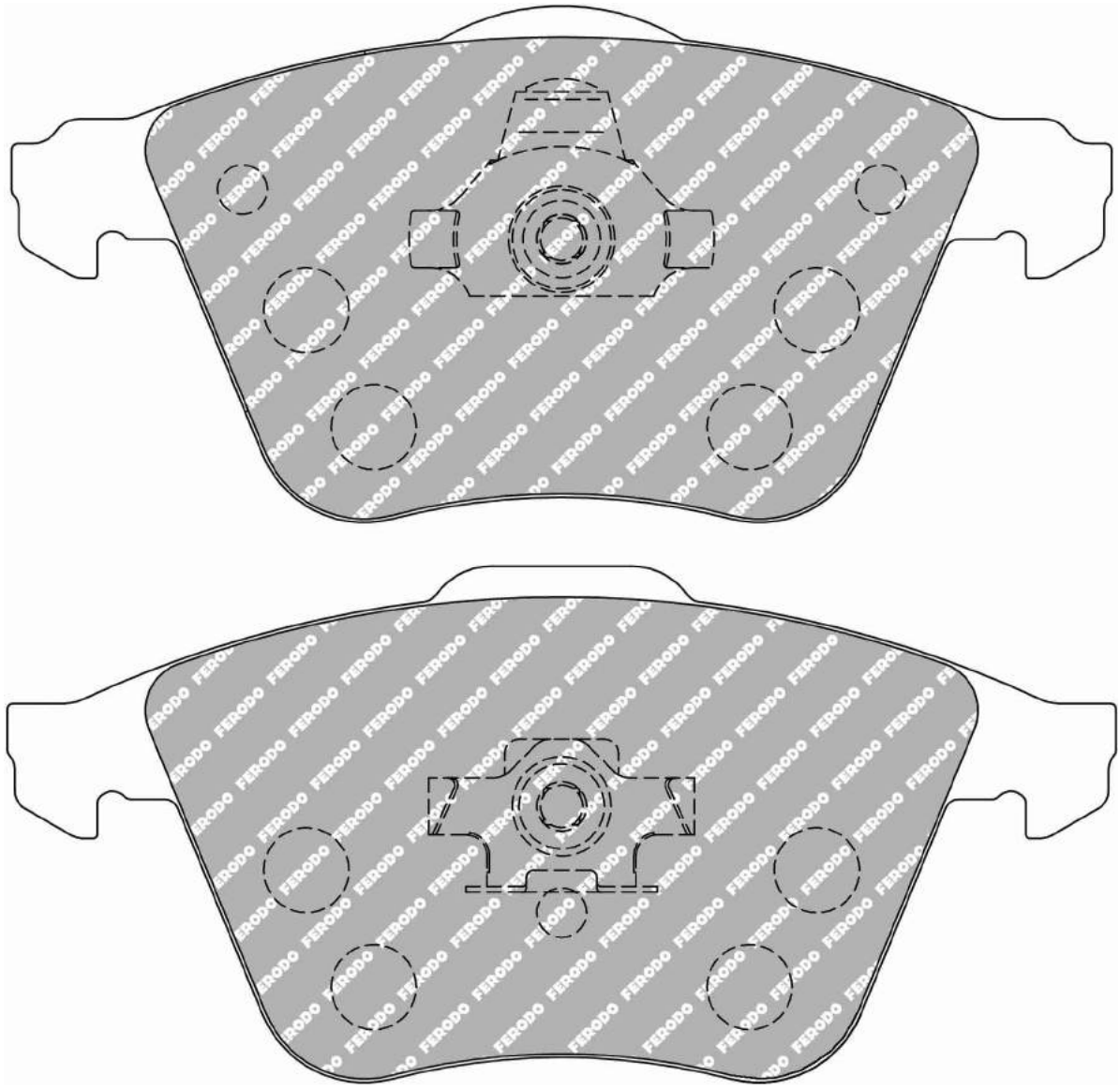

MATERIAL AVAILABILITY						
H	C	R	W	WB	Z	ZB
✔			✉		✔	

CROSS REFERENCE	
MINTEX	MDB2677
WVA	23912 20,20 - 23801 20,2

✔ Available ⚠ Exhausting
✖ Out of Range ✉ Make to order
In Introduction

FERODO RACING

Updated on November 2020

FCP1773

WVA No: 23794 19,80



154.9mm = 6.098"
155.3mm = 6.114"

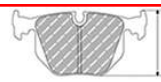

63.5mm = 2.500"
63.5mm = 2.500"



19.2mm = 0.756"
19.2mm = 0.756"



56.7mm = 2.232"
56.7mm = 2.232"

BMW Front

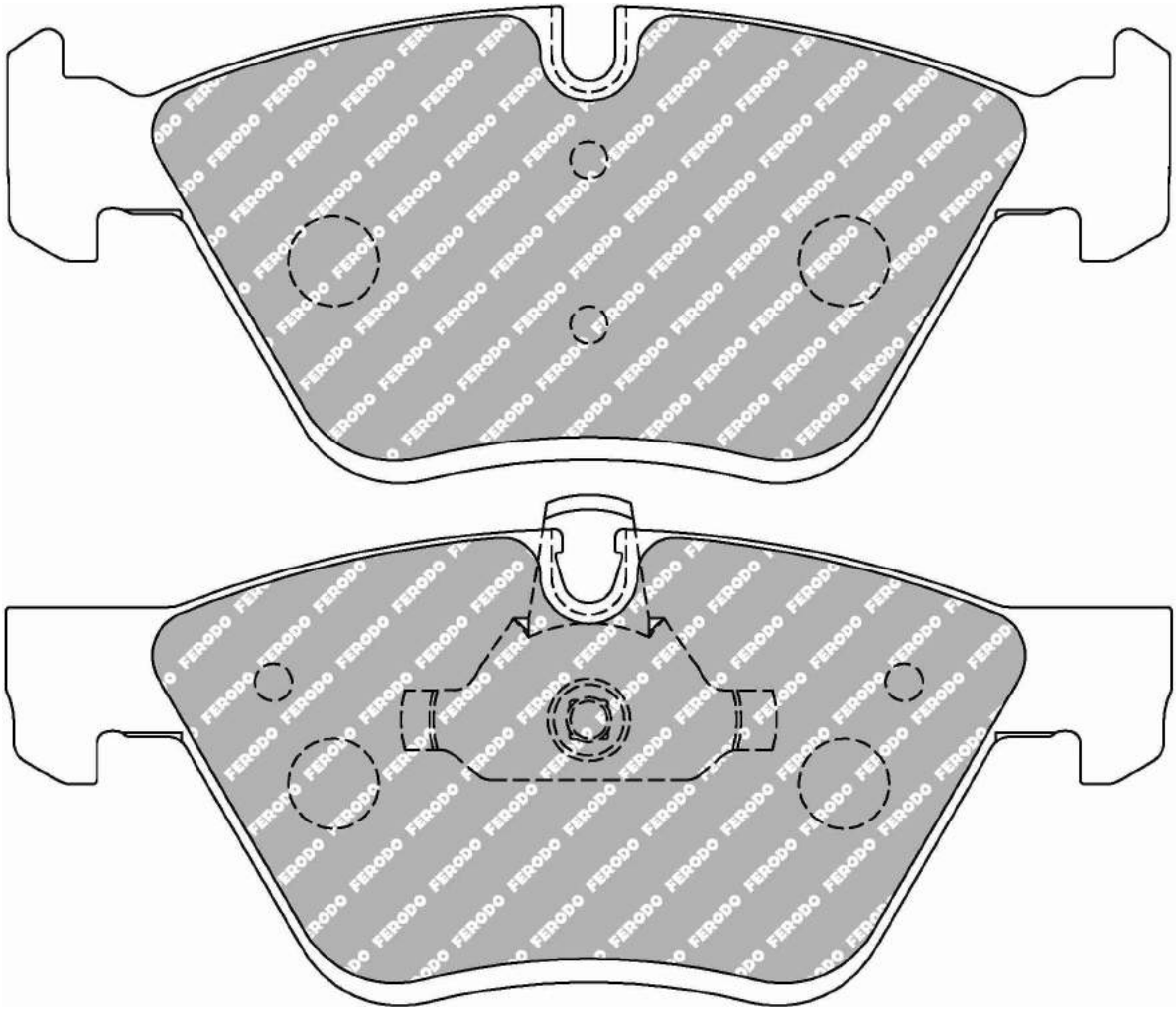

MATERIAL AVAILABILITY						
H	C	R	W	WB	Z	ZB
✔						

CROSS REFERENCE	
MINTEX	MDB2692
MINTEX	MDB3007
PFC	0394
WVA	23794 19,80

FERODO RACING

Updated on November 2020

Available
Out of Range
In Introduction
Exhausting
Make to order

FCP1783


116.2mm = 4.575"

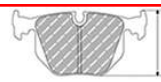
47.5mm = 1.870"


16.0mm = 0.630"


42.0mm = 1.654"

HYUNDAI Front, KIA Front

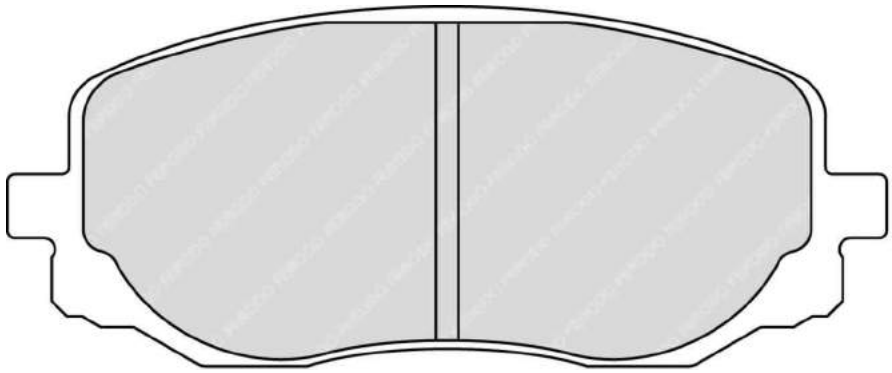

MATERIAL AVAILABILITY						
H	C	R	W	WB	Z	ZB

CROSS REFERENCE	
MINTEX	MDB2720

Available
Out of Range
In Introduction
Exhausting
Make to order

FERODO RACING

Updated on November 2020

FCP1786

WVA No: 24956 15,50
FMSI No: D969


135.7mm = 5.343"

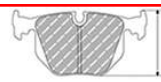
69.9mm = 2.752"


15.5mm = 0.610"


56.7mm = 2.232"

INFINITI Front, NISSAN Front

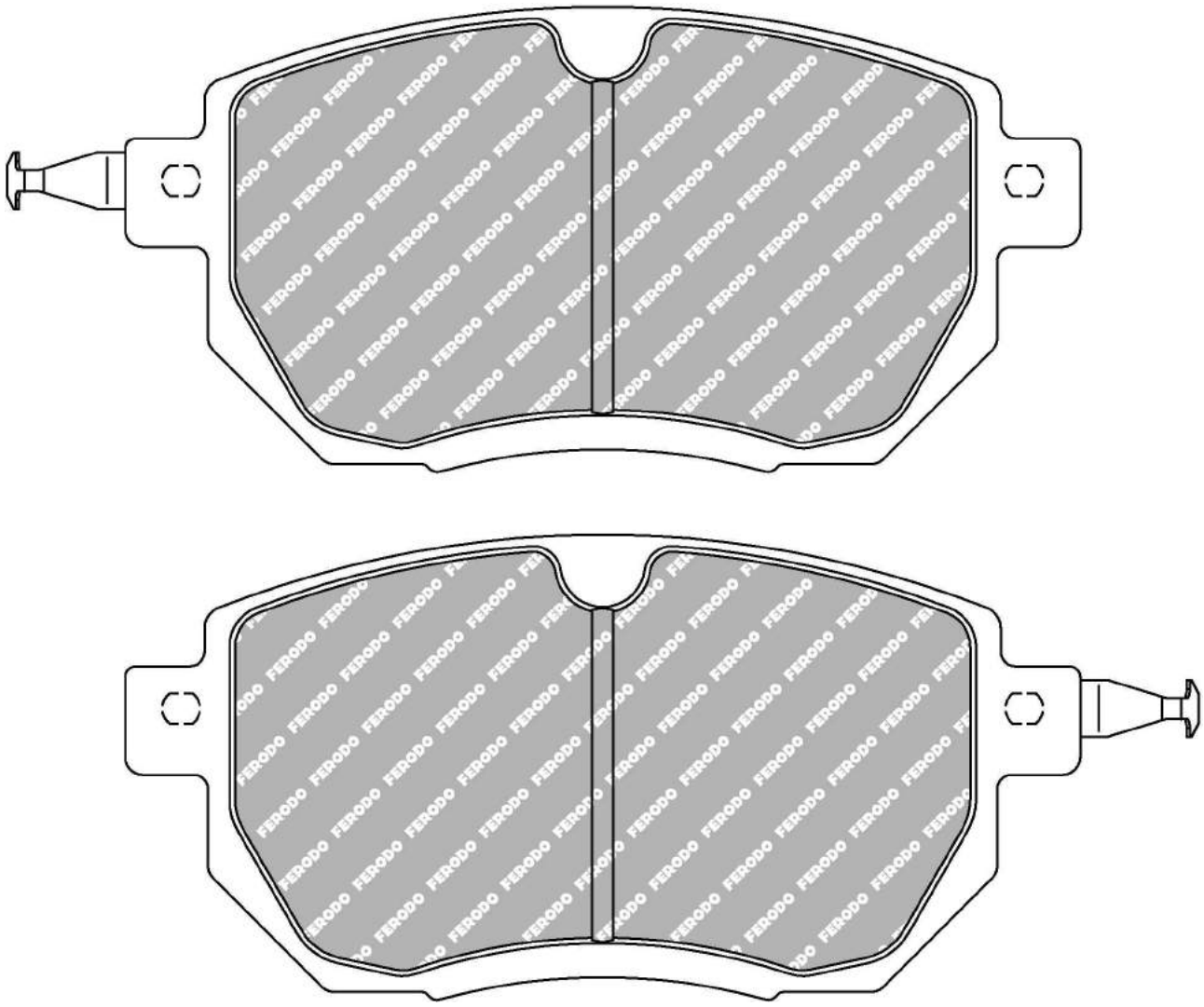

MATERIAL AVAILABILITY						
H	C	R	W	WB	Z	ZB
✔						

CROSS REFERENCE	
FMSI	D969
HAWK	HB448 0,61
MINTEX	MDB2387
WVA	24956 15,50

FERODO RACING
Updated on November 2020

Available
Out of Range
In Introduction
Exhausting
Make to order

FCP1790

WVA No: 23959 17,40


122.8mm = 4.835"

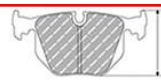
47.3mm = 1.862"


17.4mm = 0.685"


34.0mm = 1.339"

CITROEN Front, PEUGEOT Front, TOYOTA Front

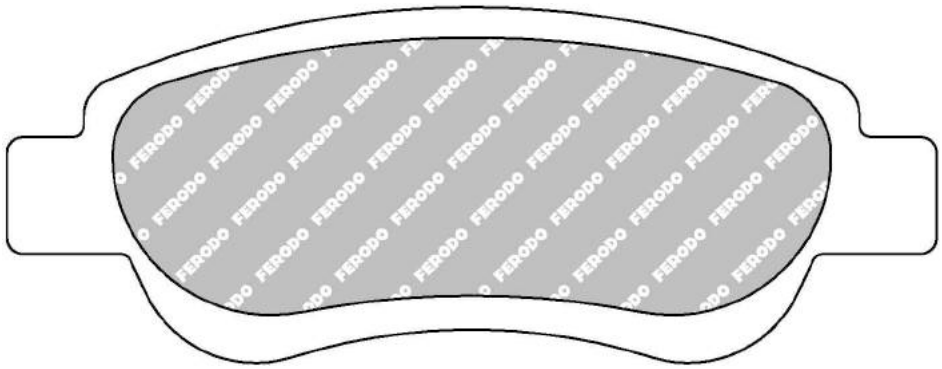

MATERIAL AVAILABILITY						
H	C	R	W	WB	Z	ZB
✔		✉				

CROSS REFERENCE	
MINTEX	MDB2743
WVA	23959 17,40

FCP1795

WVA No: 23760 17,50


116.8mm = 4.598"

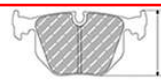
50.3mm = 1.980"


17.5mm = 0.689"


47.6mm = 1.874"

ALFA ROMEO Rear

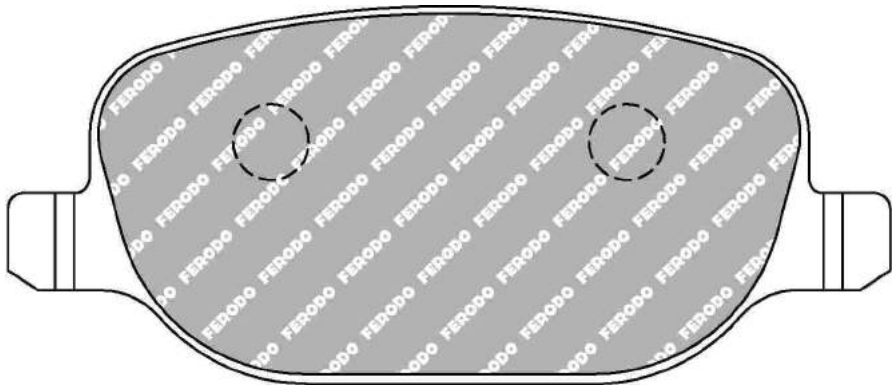

MATERIAL AVAILABILITY						
H	C	R	W	WB	Z	ZB
✔			✉		✉	

CROSS REFERENCE	
MINTEX	MDB2624
MINTEX	MDB3125
WVA	23760 17,50

FCP1805

WVA No: 24339 19,90



156.5mm = 6.161"
155.4mm = 6.118"

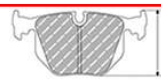

71.6mm = 2.819"
69.2mm = 2.724"



19.3mm = 0.760"
18.5mm = 0.728"



57.7mm = 2.272"
57.7mm = 2.272"

ALFA ROMEO Front

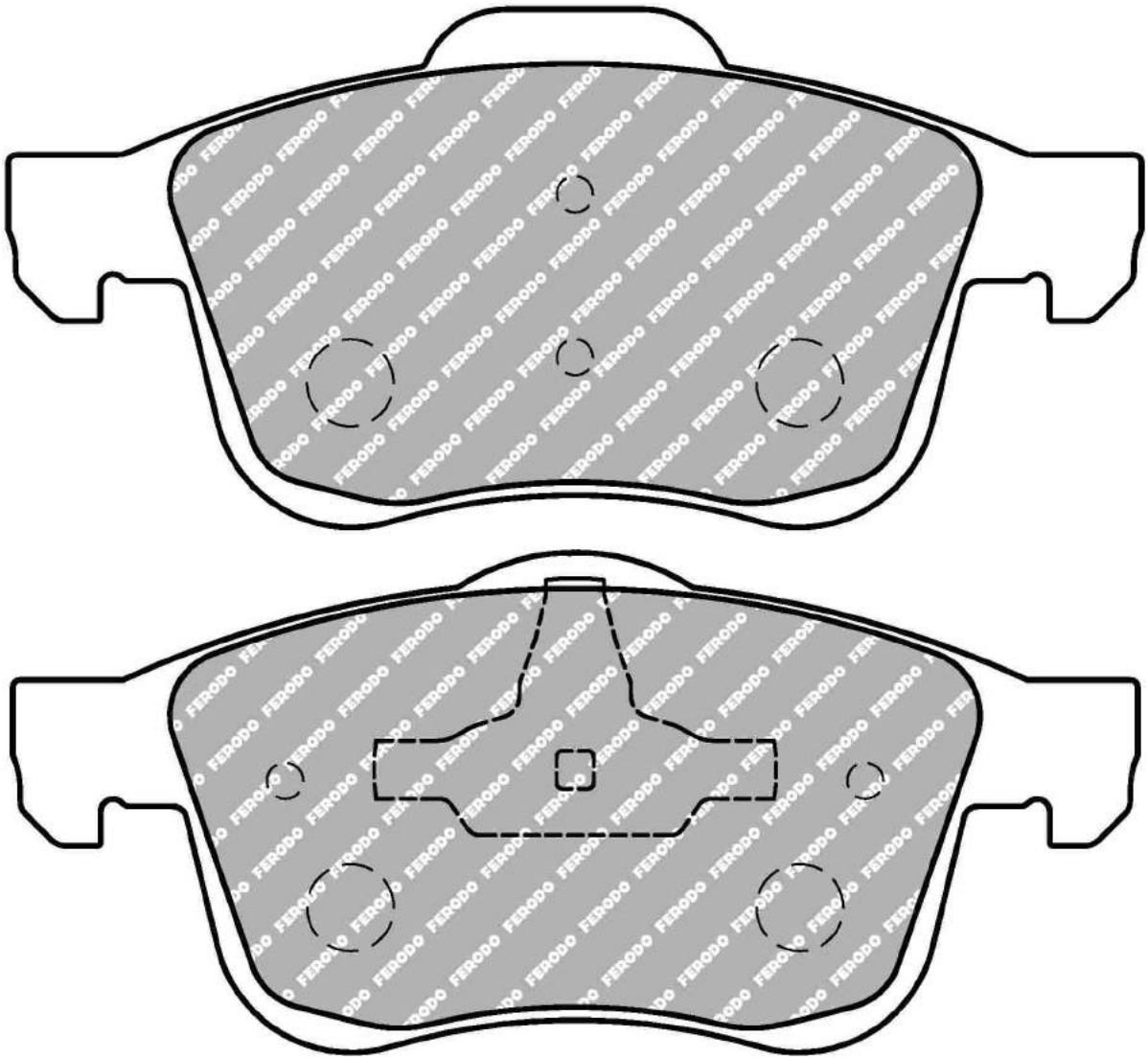

MATERIAL AVAILABILITY						
H	C	R	W	WB	Z	ZB
✔						

CROSS REFERENCE	
MINTEX	MDB2790
WVA	24339 19,90

FERODO RACING

Updated on November 2020

Available
Out of Range
In Introduction
Exhausting
Make to order

FCP1806

WVA No: 23623 17,20
FMSI No: D1309


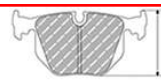



95.5mm = 3.760"	45.0mm = 1.772"	16.6mm = 0.654"	43.0mm = 1.693"
95.5mm = 3.760"	51.5mm = 2.028"	16.6mm = 0.654"	43.0mm = 1.693"

BMW Rear, MINI Rear

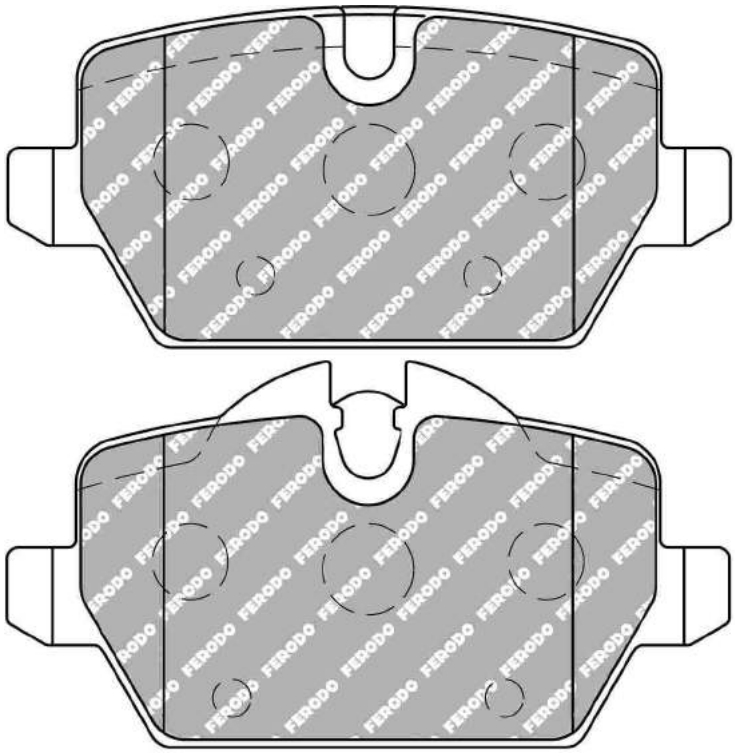

MATERIAL AVAILABILITY						
H	C	R	W	WB	Z	ZB
✔			✉			

CROSS REFERENCE	
FMSI	D1309
HAWK	HB574 .666
MINTEX	MDB2681
MINTEX	MDB3131
WVA	23623 17,20

✔ Available
✖ Out of Range
In Introduction
Exhausting
Make to order

FERODO RACING

Updated on November 2020

FCP1807

WVA No: 23926 17,00


123.2mm = 4.850"
123.2mm = 4.850"

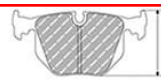
48.3mm = 1.902"
44.0mm = 1.732"


16.4mm = 0.646"
16.4mm = 0.646"


39.7mm = 1.563"
39.7mm = 1.563"

BMW Rear

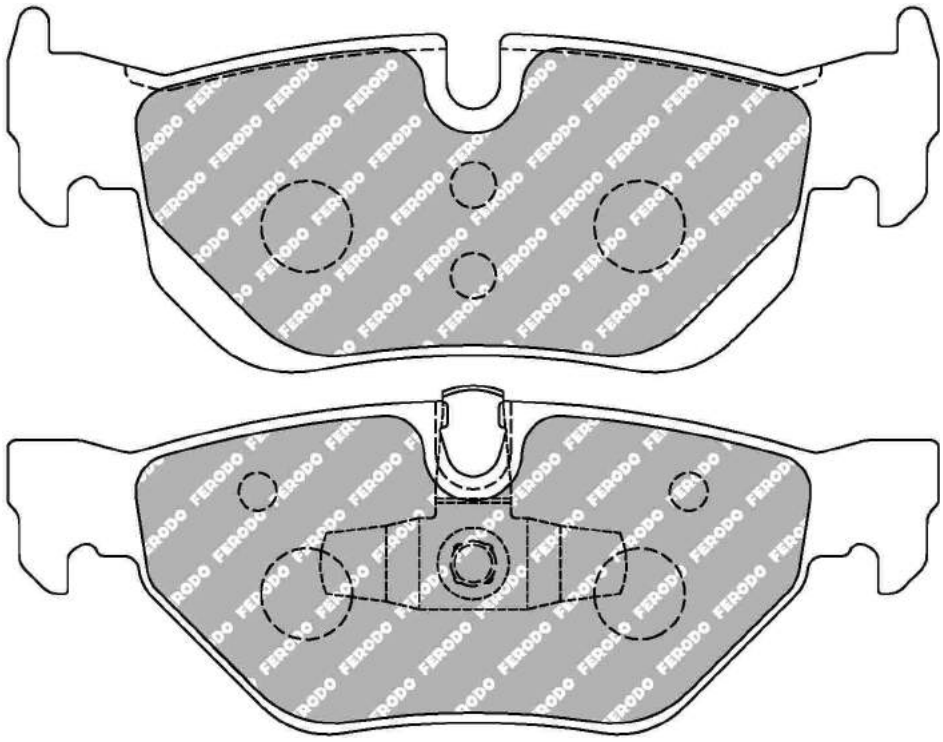

MATERIAL AVAILABILITY						
H	C	R	W	WB	Z	ZB
✔					✉	

CROSS REFERENCE	
MINTEX	MDB2683
PFC	0396
WVA	23926 17,00

FERODO RACING

Updated on November 2020

✔ Available
✖ Out of Range
In Introduction
Exhausting
Make to order

FCP1808

WVA No: 23550 17,00
FMSI No: D1170


123.2mm = 4.850"
123.2mm = 4.850"

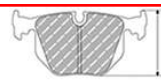
59.0mm = 2.323"
57.9mm = 2.280"


16.4mm = 0.646"
16.4mm = 0.646"


54.8mm = 2.157"
54.8mm = 2.157"

BMW Rear

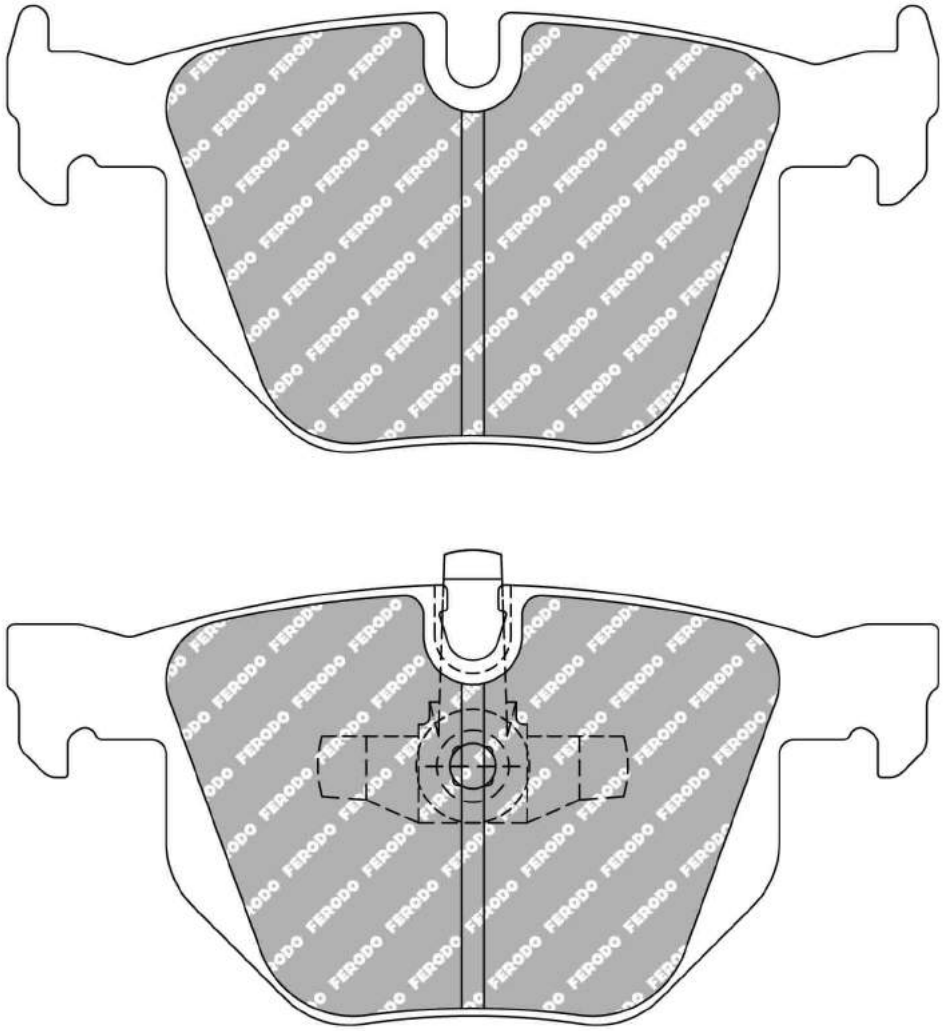

MATERIAL AVAILABILITY						
H	C	R	W	WB	Z	ZB
✔						

CROSS REFERENCE	
EBC	DP21588
FMSI	D1170
HAWK	HB624x.642
MINTEX	MDB2717
PAGID	8051
WVA	23550 17,00

✔ Available
✖ Out of Range
In Introduction
Exhausting
Make to order

FERODO RACING

Updated on November 2020

FCP1858

WVA No: 24349 17,20


102.0mm = 4.016"

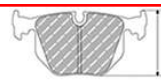
47.0mm = 1.850"


17.3mm = 0.681"


41.3mm = 1.626"

ABARTH Rear, FIAT Rear, OPEL Rear, VAUXHALL Rear

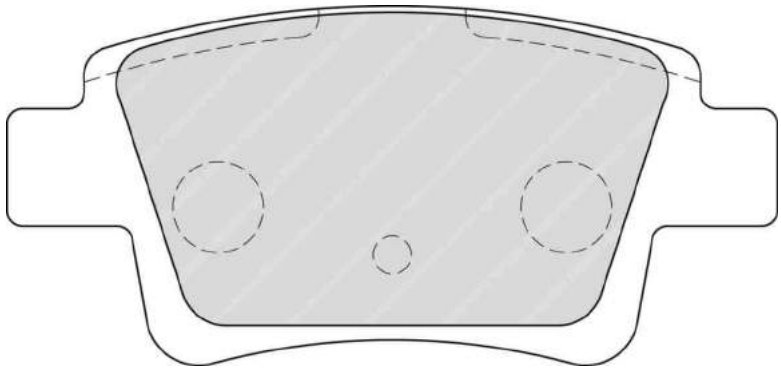

MATERIAL AVAILABILITY						
H	C	R	W	WB	Z	ZB
✔						

CROSS REFERENCE	
MINTEX	MDB2779
PAGID	4940
WVA	24349 17,20

FCP1859


131.7mm = 5.185"

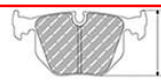
55.8mm = 2.197"


16.5mm = 0.650"

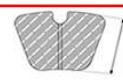
50.5mm = 1.988"

HONDA Front

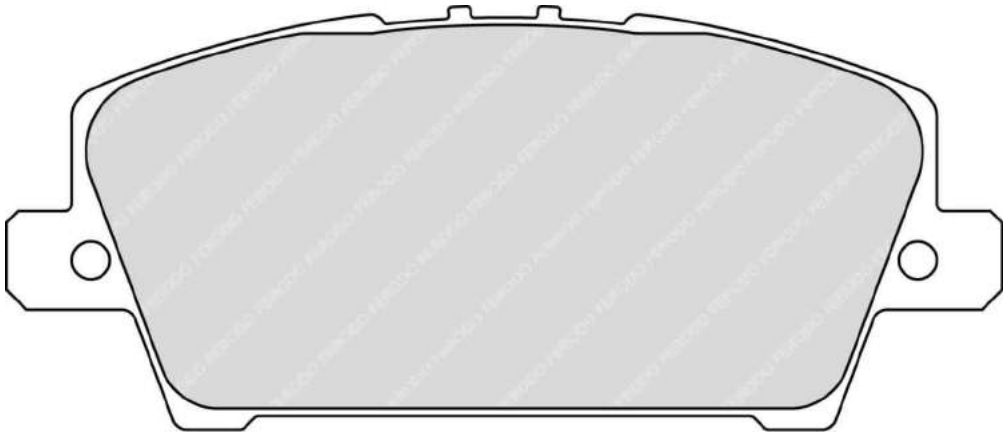

MATERIAL AVAILABILITY						
H	C	R	W	WB	Z	ZB
✔						

CROSS REFERENCE	
MINTEX	MDB2791

FERODO RACING

Updated on November 2020

Available
Out of Range
In Introduction
Exhausting
Make to order

FCP1862

WVA No: 24086 15,50


95.8mm = 3.772"

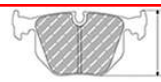
46.3mm = 1.823"


14.5mm = 0.571"


37.0mm = 1.457"

HONDA Rear

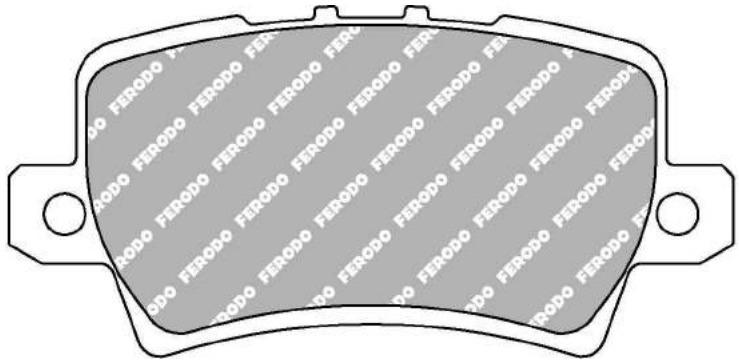

MATERIAL AVAILABILITY						
H	C	R	W	WB	Z	ZB
✔						

CROSS REFERENCE	
MINTEX	MDB2770
WVA	24086 15,50

FCP1894

WVA No: 24298


99.6mm = 3.921"


44.7mm = 1.760"


14.5mm = 0.571"


39.8mm = 1.567"

ABARTH Rear, MAZDA Rear

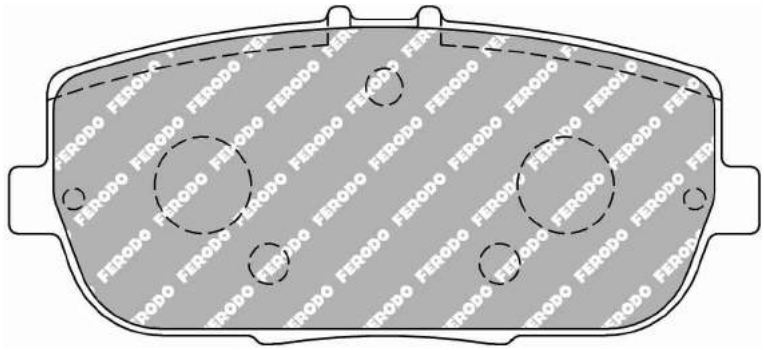

MATERIAL AVAILABILITY						
H	C	R	W	WB	Z	ZB
✔						

CROSS REFERENCE	
PAGID	8077
WVA	24298

FCP1917


95.3mm = 3.752"

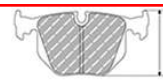
43.2mm = 1.701"


15.1mm = 0.594"


41.3mm = 1.626"

FORD Rear, VOLVO Rear

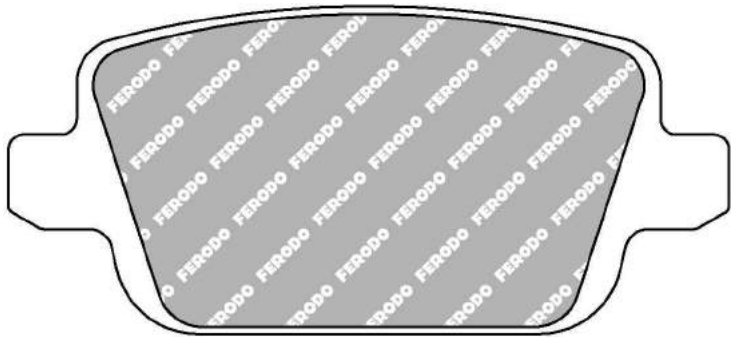

MATERIAL AVAILABILITY						
H	C	R	W	WB	Z	ZB
✔						

CROSS REFERENCE	
MINTEX	MDB2887

FERODO RACING

Updated on November 2020

Available
Out of Range
In Introduction
Exhausting
Make to order

FCP1931

WVA No: 24137 16,30



123.1mm = 4.846"
123.1mm = 4.846"

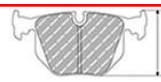

51.9mm = 2.043"
51.9mm = 2.043"



16.3mm = 0.642"
16.3mm = 0.642"



41.0mm = 1.614"
41.0mm = 1.614"

CADILLAC Rear, FORD Rear, JAGUAR Rear, MAZDA Rear, PONTIAC Rear, RENAULT Rear, SAAB Rear, VOLVO Rear

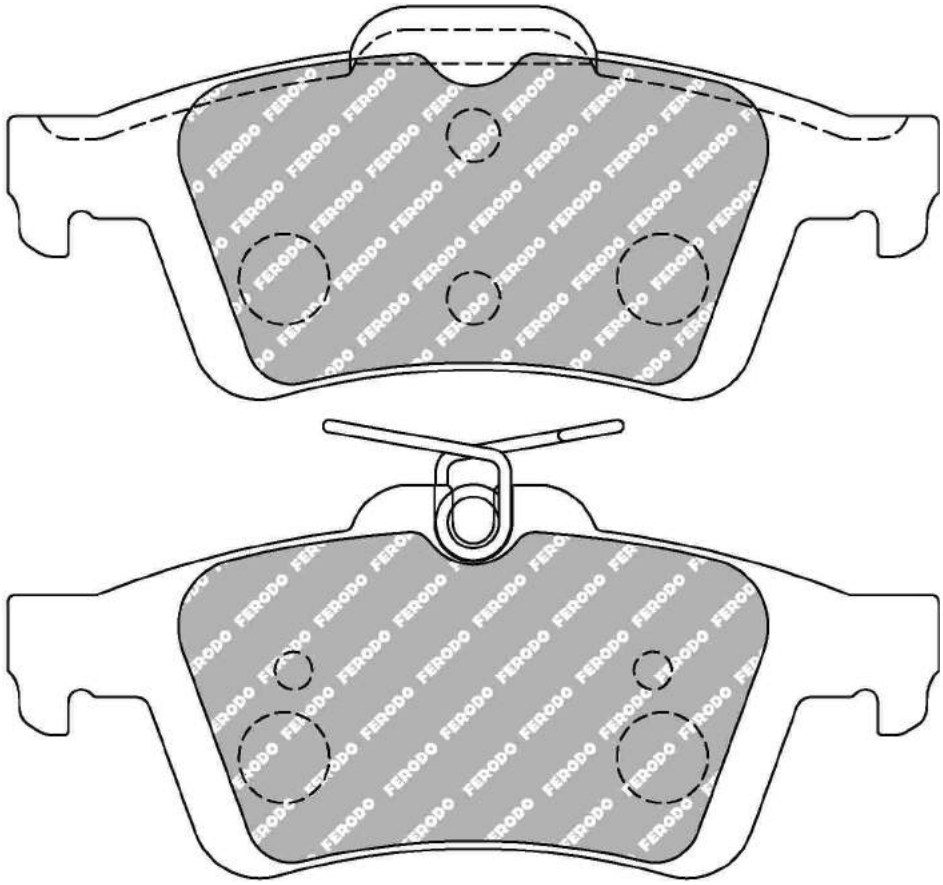

MATERIAL AVAILABILITY						
H	C	R	W	WB	Z	ZB
✔			✉			

CROSS REFERENCE	
MINTEX	MDB2686
MINTEX	MDB3150
OE FORD	1809458
WVA	24137 16,30

✔ Available
✖ Out of Range
In Introduction
Exhausting
Make to order

FERODO RACING

Updated on November 2020

FCP1947

WVA No: 24271 14,60
FMSI No: D1114


110.5mm = 4.350"

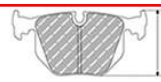
38.2mm = 1.504"


14.6mm = 0.575"


32.5mm = 1.280"

SUBARU Rear

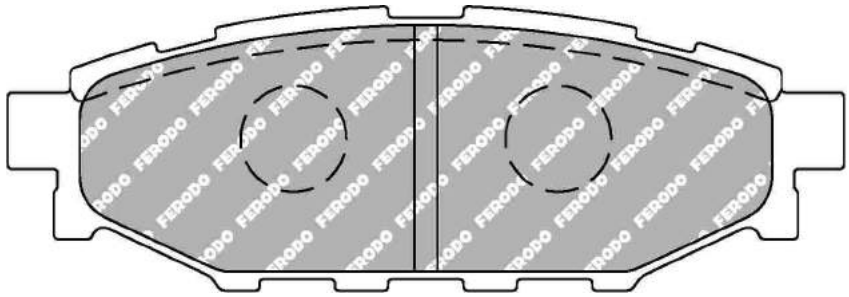

MATERIAL AVAILABILITY						
H	C	R	W	WB	Z	ZB
✔						

CROSS REFERENCE	
FMSI	D1114
HAWK	HB557
MINTEX	MDB2732
WVA	24271 14,60

FCP1954


150.4mm = 5.921"

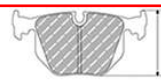
56.9mm = 2.240"


19.0mm = 0.748"


50.5mm = 1.988"

CHRYSLER Front

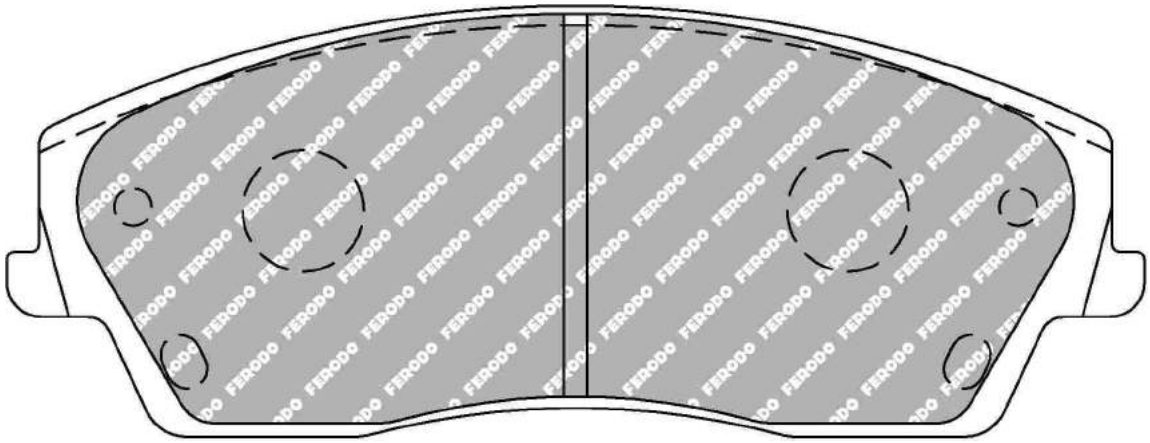

MATERIAL AVAILABILITY						
H	C	R	W	WB	Z	ZB
✉						

CROSS REFERENCE	
MINTEX	MDB2697

FERODO RACING

Updated on November 2020

Available
Out of Range
In Introduction
Exhausting
Make to order

FCP1975

WVA No: 24289 17,10 - 24290 17,10



95.5mm = 3.760"	48.4mm = 1.906"	17.0mm = 0.669"	33.3mm = 1.311"
95.5mm = 3.760"	39.2mm = 1.543"	17.0mm = 0.669"	33.3mm = 1.311"

MINI Rear

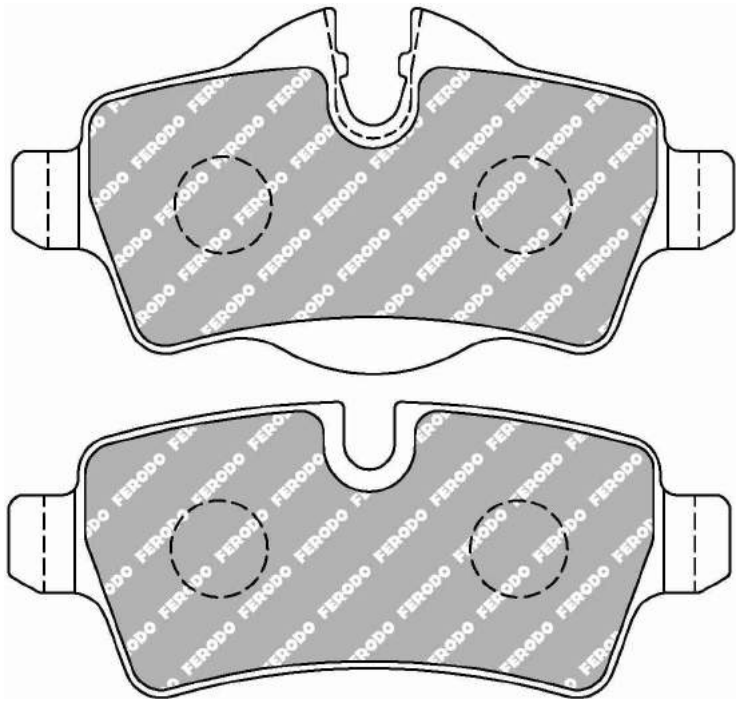

MATERIAL AVAILABILITY						
H	C	R	W	WB	Z	ZB
✔			✔			

CROSS REFERENCE	
MINTEX	MDB2930
WVA	24289 17,10 - 24290 17,10

FCP1984

WVA No: 24222 17,90
FMSI No: D1078


157.2mm = 6.189"

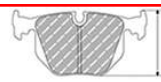
63.5mm = 2.500"


17.9mm = 0.705"


48.1mm = 1.894"

SUBARU Front

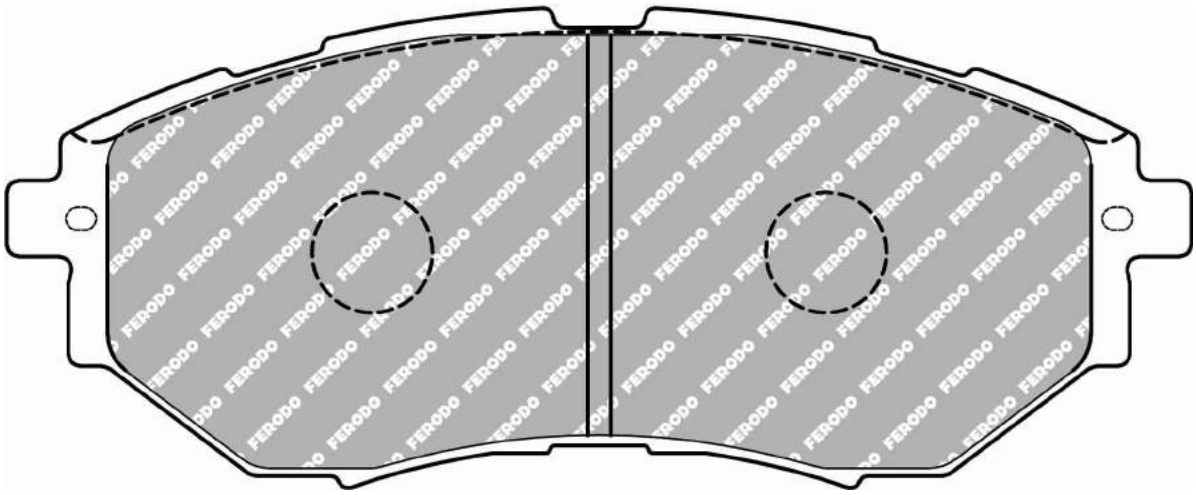

MATERIAL AVAILABILITY						
H	C	R	W	WB	Z	ZB
✔						

CROSS REFERENCE	
FMSI	D1078
HAWK	HB533
MINTEX	MDB2704
WVA	24222 17,90

FERODO RACING
Updated on November 2020

✔ Available
✖ Out of Range
In Introduction
Exhausting
Make to order

FCP4044

WVA No: 24408 19,40


188.0mm = 7.402"
188.0mm = 7.402"

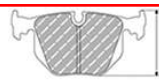
72.8mm = 2.866"
73.6mm = 2.898"


18.3mm = 0.720"
18.3mm = 0.720"


62.0mm = 2.441"
62.0mm = 2.441"

AUDI Front, FORD Front

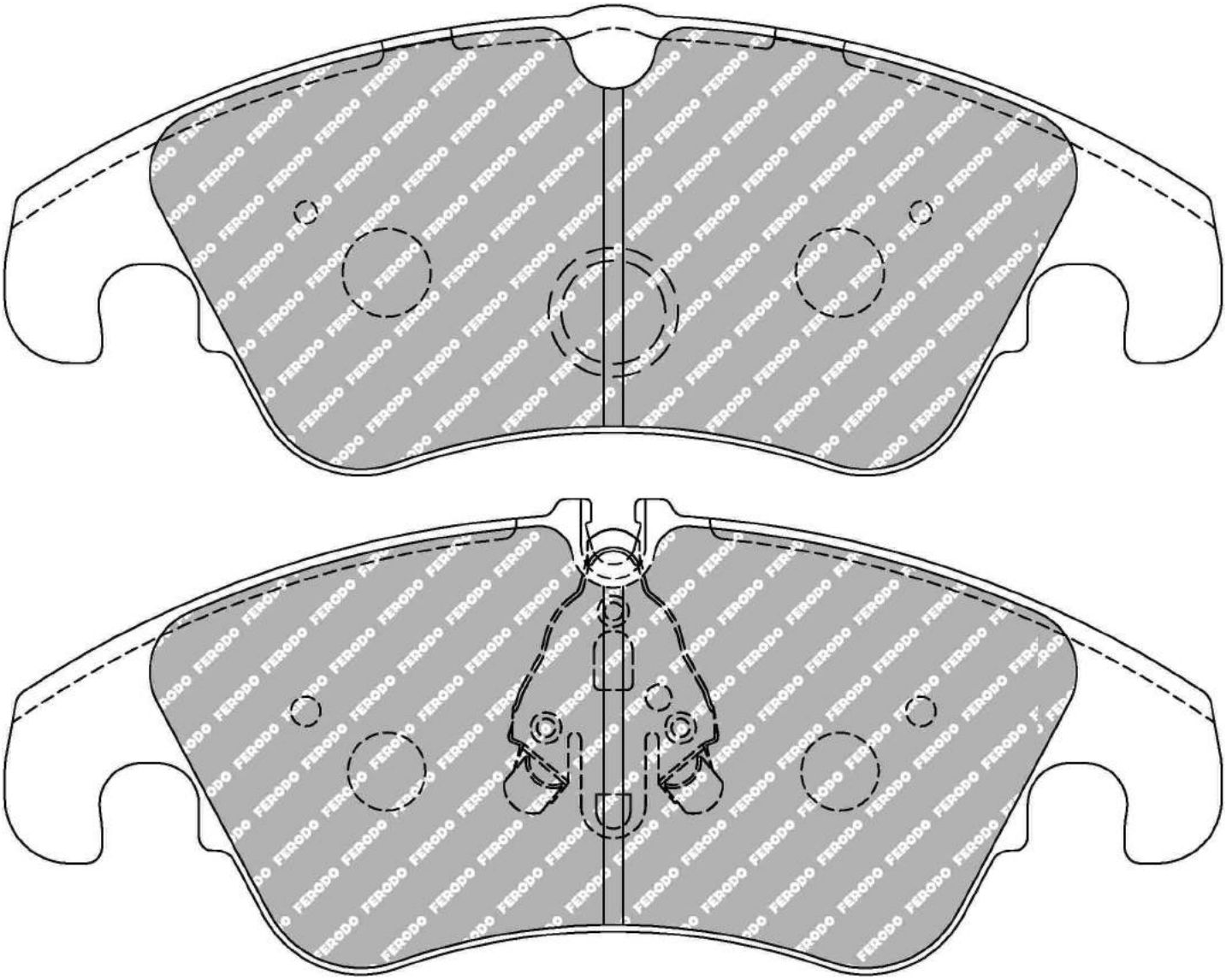

MATERIAL AVAILABILITY						
H	C	R	W	WB	Z	ZB
✔		✉				

CROSS REFERENCE	
MINTEX	MDB2934
OE AUDI	8K0698151 / B
PAGID	1748
PAGID	8096
WVA	24408 19,40
WVA	24409 19,40
WVA	24743 19,40

✔ Available
✖ Out of Range
In Introduction
Exhausting
Make to order

FERODO RACING

Updated on November 2020

FCP4045

WVA No: 24705 20,00



155.1mm = 6.106"
155.1mm = 6.106"

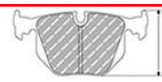

72.3mm = 2.846"
67.0mm = 2.638"



20.0mm = 0.787"
20.0mm = 0.787"



58.6mm = 2.307"
58.6mm = 2.307"

AUDI Front, JAGUAR Front

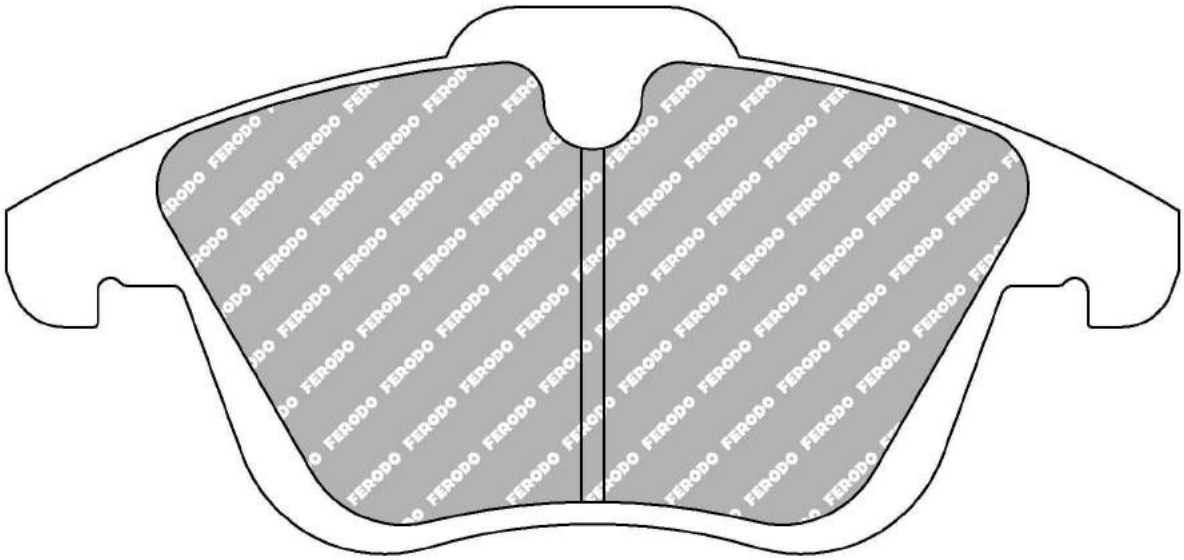

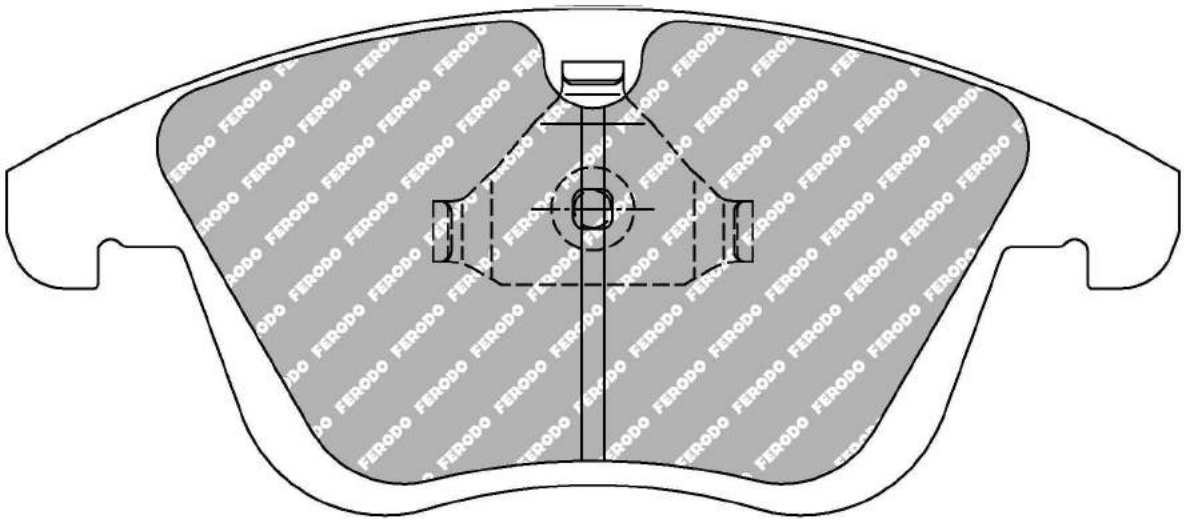

MATERIAL AVAILABILITY						
H	C	R	W	WB	Z	ZB
✔						

CROSS REFERENCE	
MINTEX	MDB2952
OE AUDI	8K0698151A
PAGID	1760
WVA	24705 20,00
WVA	24706 20,00
WVA	24707 20,00

FERODO RACING

Updated on November 2020

✔ Available
✖ Out of Range
In Introduction
Exhausting
Make to order

FCP4050

WVA No: 24606 17,50


116.4mm = 4.583"

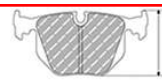
58.8mm = 2.315"


17.8mm = 0.701"


48.1mm = 1.894"

AUDI Rear, PORSCHE Rear

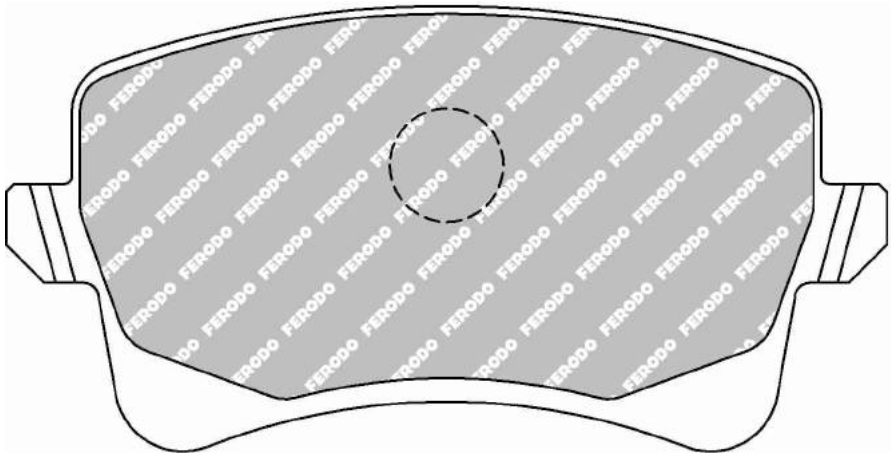

MATERIAL AVAILABILITY						
H	C	R	W	WB	Z	ZB
✔			✉			

CROSS REFERENCE	
MINTEX	MDB2929
OE AUDI	8K0698451
OE AUDI	8K0698451A
PAGID	1736
WVA	24606 17,50

✔ Available
✖ Out of Range
In Introduction
Exhausting
Make to order

FERODO RACING

Updated on November 2020

FCP4064

WVA No: 24552 16,10


209.9mm = 8.264"

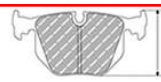
94.5mm = 3.720"


17.2mm = 0.677"


66.4mm = 2.614"

AUDI Front, PORSCHE Front, VOLKSWAGEN Front

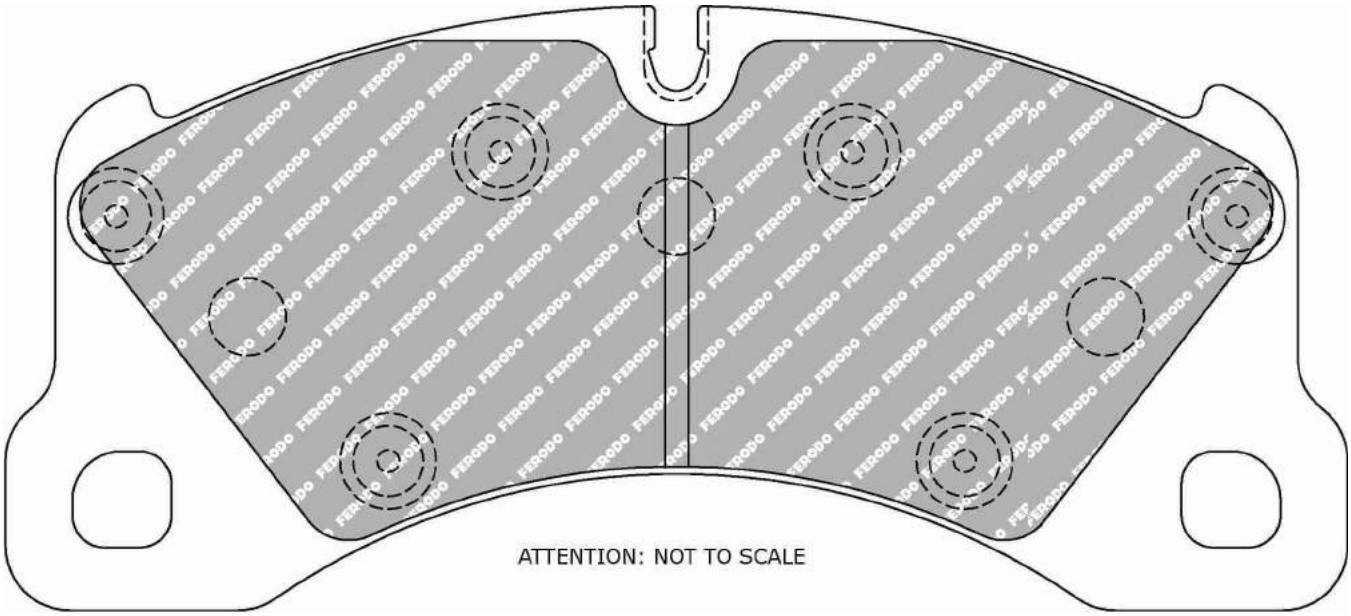

MATERIAL AVAILABILITY						
H	C	R	W	WB	Z	ZB
✔						

CROSS REFERENCE	
MINTEX	MDB2833
PAGID	4917
PAGID	T2056
WVA	24552 16,10
WVA	25007

FERODO RACING

Updated on November 2020

✔ Available
✖ Out of Range
In Introduction
Exhausting
Make to order

FCP4080

WVA No: 23984 17,90
FMSI No: D1204


131.5mm = 5.177"
131.5mm = 5.177"

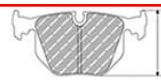
71.6mm = 2.819"
64.1mm = 2.524"


17.9mm = 0.705"
17.9mm = 0.705"


53.0mm = 2.087"
53.0mm = 2.087"

MINI Front

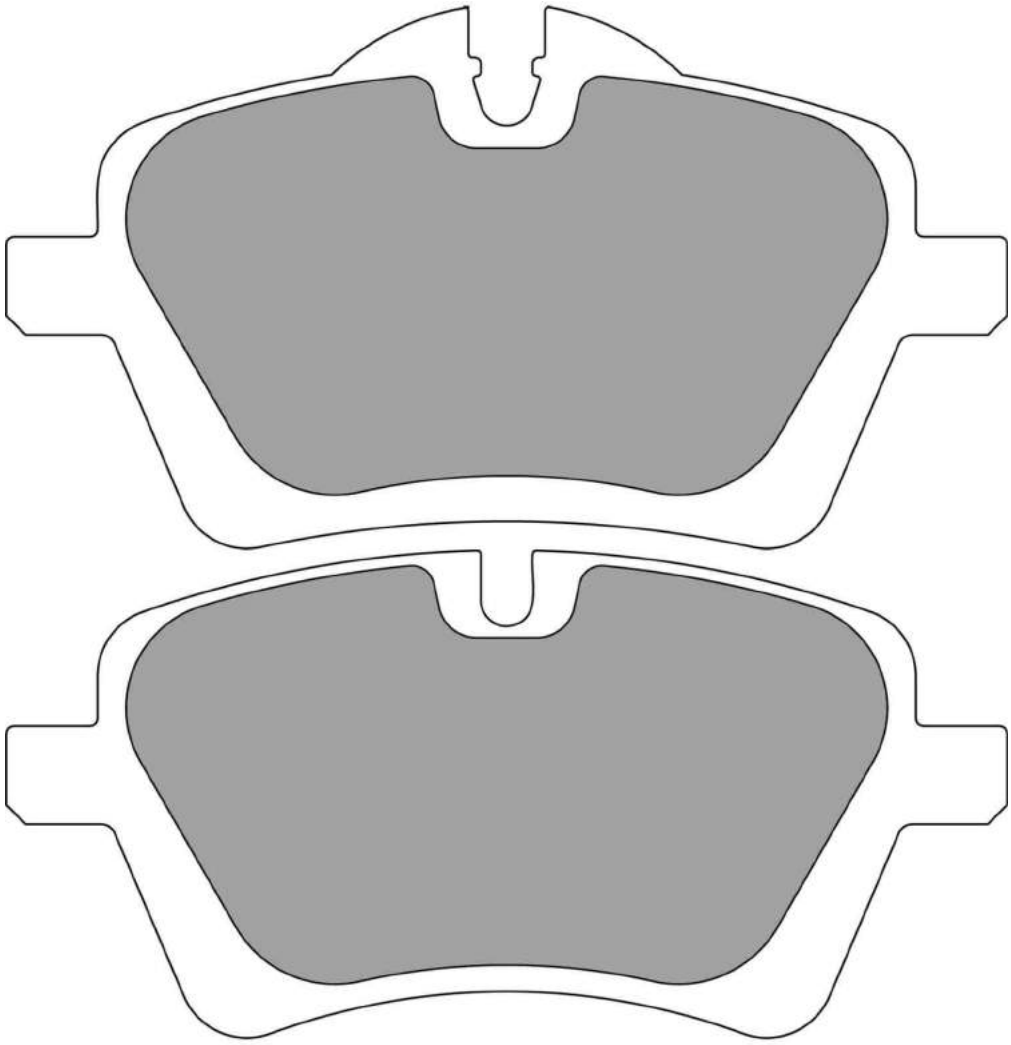

Please Note: does not fit wear indicator

MATERIAL AVAILABILITY						
H	C	R	W	WB	Z	ZB
✔			✔			

CROSS REFERENCE	
EBC	DP21789
FMSI	D1204
HAWK	HB560
MINTEX	MDB2816
WVA	23984 17,90

✔ Available
✖ Out of Range
In Introduction
Exhausting
Make to order

FERODO RACING

Updated on November 2020

FCP4081


122.95mm = 4.841"

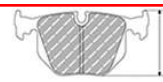
55.1mm = 2.169"


17.6mm = 0.693"


46.7mm = 1.839"

TOYOTA Front

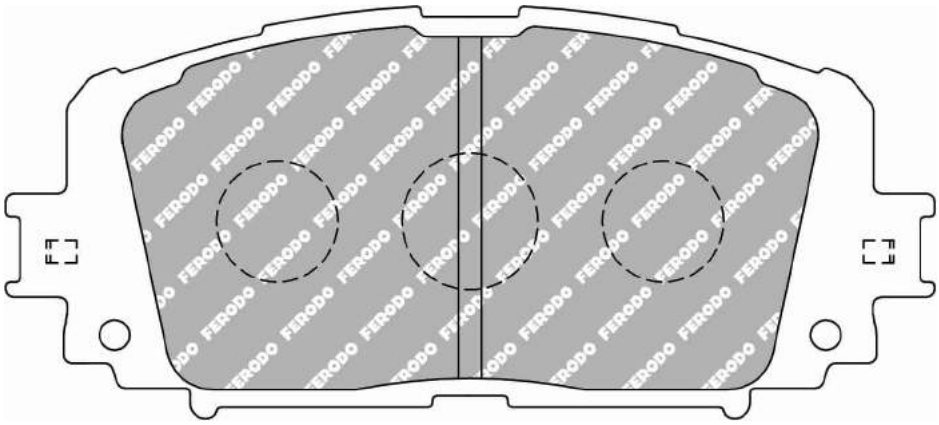

MATERIAL AVAILABILITY						
H	C	R	W	WB	Z	ZB
✔						

FCP4168


86.8mm = 3.417"

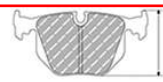
63.7mm = 2.508"


14.5mm = 0.571"


48.0mm = 1.890"

FMSI No: D1368

MITSUBISHI Rear

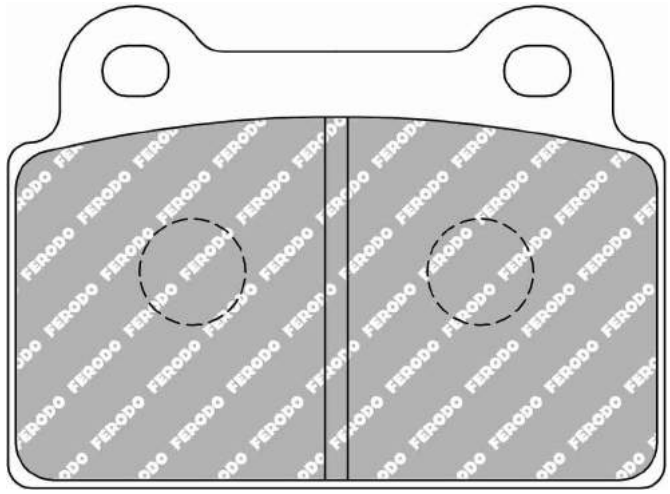

MATERIAL AVAILABILITY						
H	C	R	W	WB	Z	ZB
✔		✉	✔		✔	

CROSS REFERENCE	
BREMBO	XA7.G0.11
BREMBO	XA7.G0.12
FMSI	D1368
HAWK	HB615
Raybestos	DR1368

FERODO RACING

Updated on November 2020

✔ Available ⚠ Exhausting
✖ Out of Range ✉ Make to order
In Introduction

FCP4172

WVA No: 24920 15,60
FMSI No: D1346


127.3mm = 5.012"

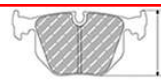
75.0mm = 2.953"


16.1mm = 0.634"


55.0mm = 2.165"

INFINITI Front, NISSAN Front

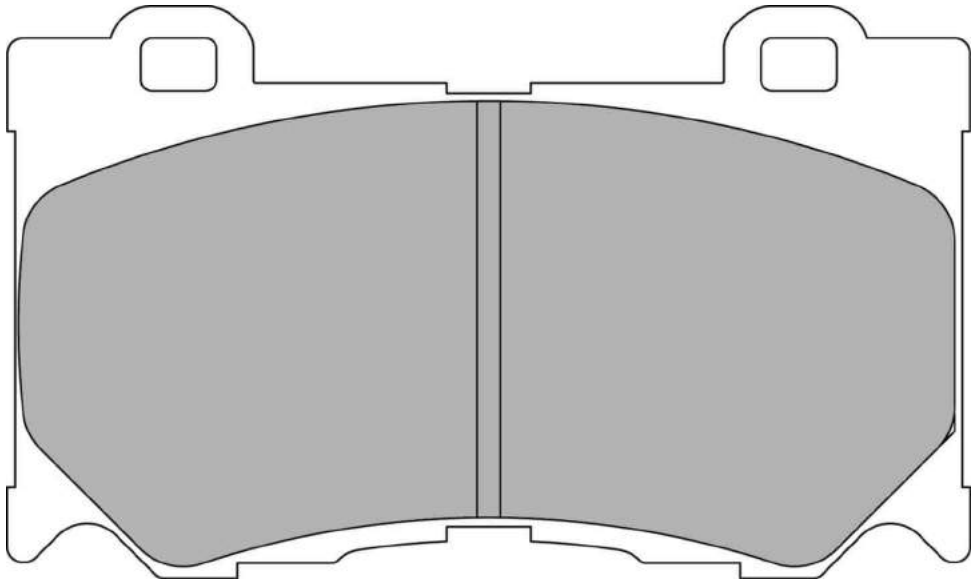

MATERIAL AVAILABILITY						
H	C	R	W	WB	Z	ZB
✔						

CROSS REFERENCE	
FMSI	D1346
HAWK	HB601 .626
WVA	24920 15,60

FCP4173

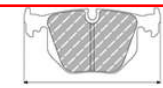
99.7mm = 3.925"

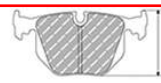
60.0mm = 2.362"


13.4mm = 0.528"


47.4mm = 1.866"

FMSI No: D1347

INFINITI Rear, NISSAN Rear

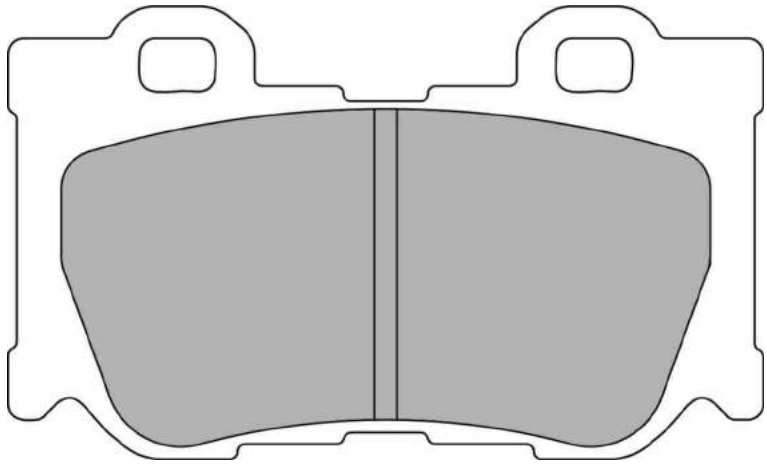

MATERIAL AVAILABILITY						
H	C	R	W	WB	Z	ZB
✔						

CROSS REFERENCE	
FMSI	D1347
HAWK	HB602 .545
MINTEX	MDB3050

FCP4187

WVA No: 24854 16,70
FMSI No: D1124


110.6mm = 4.354"

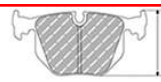
39.7mm = 1.563"


16.7mm = 0.657"


34.0mm = 1.339"

SCION Rear, SUBARU Rear, TOYOTA Rear

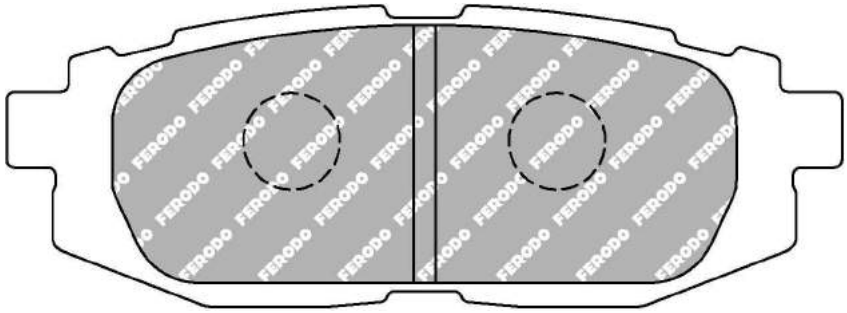

MATERIAL AVAILABILITY						
H	C	R	W	WB	Z	ZB
✔			✔			

CROSS REFERENCE	
EBC	DP21758
ENDLESS	EP472
FMSI	D1124
HAWK	HB671
MINTEX	MDB3006
PAGID	8175
WVA	24854 16,70

FERODO RACING

Updated on November 2020

Available
Out of Range
In Introduction
Exhausting
Make to order

FCP4191

WVA No: 23313 20,30 - 24255 20,30



155.3mm = 6.114" 68.5mm = 2.697" 20.3mm = 0.799" 56.7mm = 2.232"

BMW Front

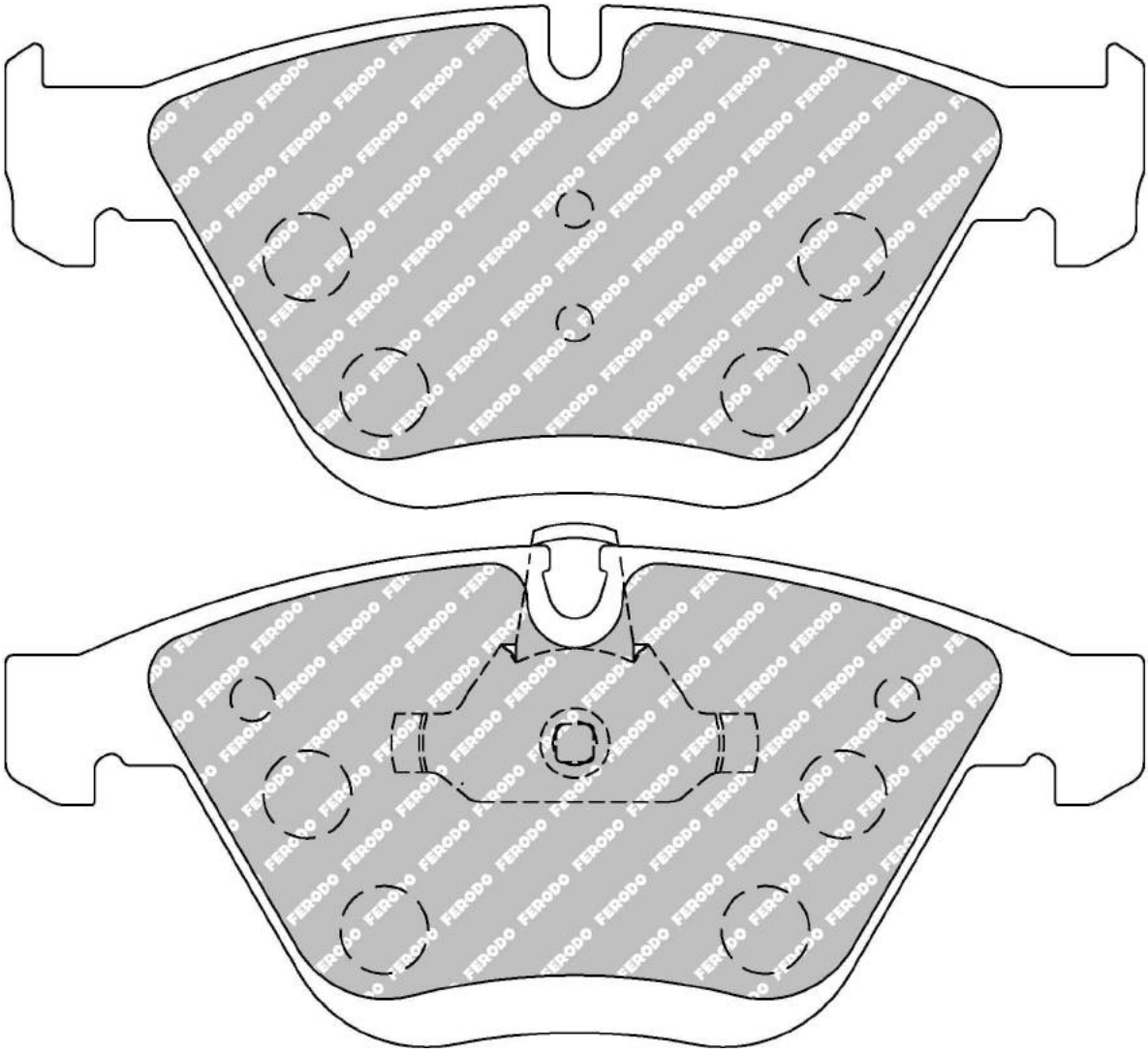

MATERIAL AVAILABILITY						
H	C	R	W	WB	Z	ZB
✔						

CROSS REFERENCE	
MINTEX	MDB2960
MINTEX	MDB3092
PAGID	8053
WVA	23313 20,30 - 24255 20,30

FCP4217

WVA No: 24315 17,10
FMSI No: D1372


87.0mm = 3.425"

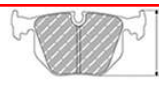
76.0mm = 2.992"


16.3mm = 0.642"


52.5mm = 2.067"

BMW Rear

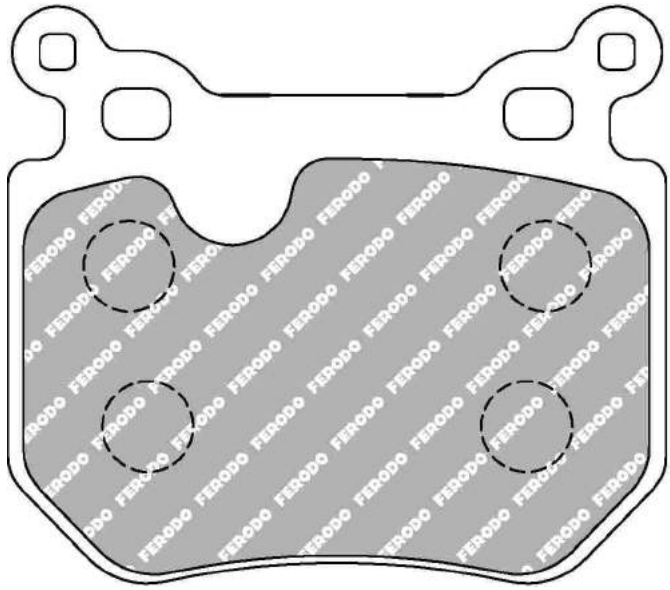

MATERIAL AVAILABILITY						
H	C	R	W	WB	Z	ZB
✔		✉			✉	

CROSS REFERENCE	
FMSI	D1372
HAWK	HB604x.598
MINTEX	MDB2828
OE BMW	34 216 784808
OE BMW	34 216 791421
PAGID	8085
PAGID	T1620
WVA	24315 17,10

FERODO RACING
Updated on November 2020

✔ Available
✖ Out of Range
In Introduction
Exhausting
✉ Make to order

FCP4218

WVA No: 24316 17,00
FMSI No: D1371



162.8mm = 6.409" | 73.1mm = 2.878" | 16.7mm = 0.657" | 61.0mm = 2.402"

BMW Front, MINI Front

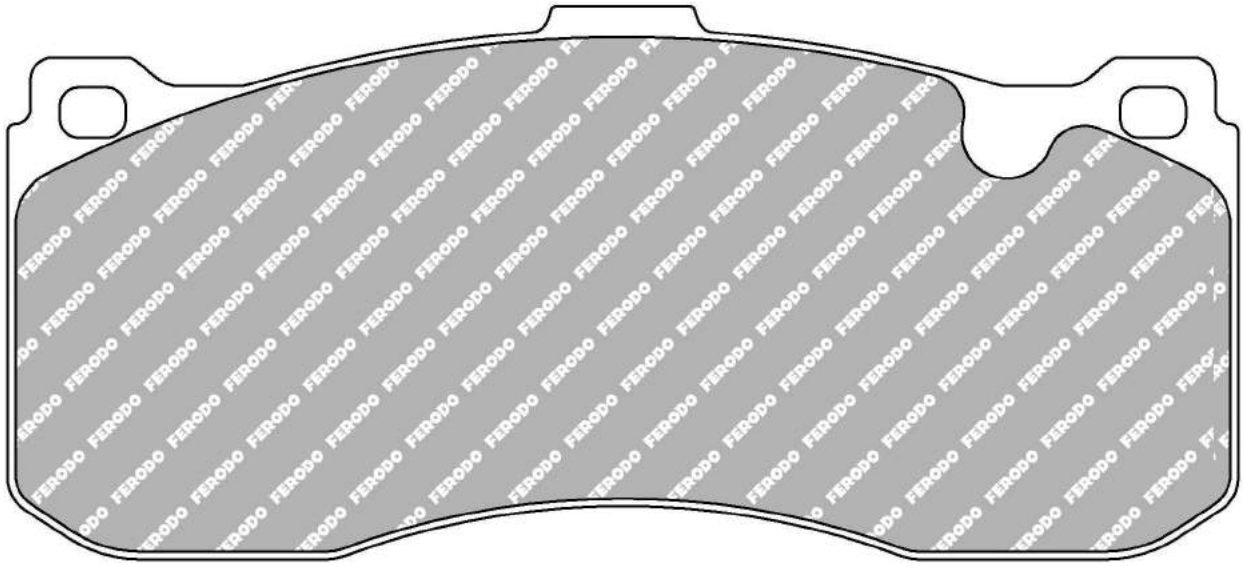

Back-plate design does not allow wear indicator fitment

MATERIAL AVAILABILITY						
H	C	R	W	WB	Z	ZB
✔		✉			✉	

CROSS REFERENCE	
EBC	DP21995-DP31995
FMSI	D1371
HAWK	HB603x.616
MINTEX	MDB2974
OE BMW	34116786044
PAGID	T1784
WVA	24316 17,00

FCP4223

WVA No: 23801



155.3mm = 6.114"
156.5mm = 6.161"

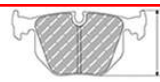

73.0mm = 2.874"
73.0mm = 2.874"



20.4mm = 0.803"
20.4mm = 0.803"



64.4mm = 2.535"
64.4mm = 2.535"

AUDI Front, SEAT Front, SKODA Front, VOLKSWAGEN Front

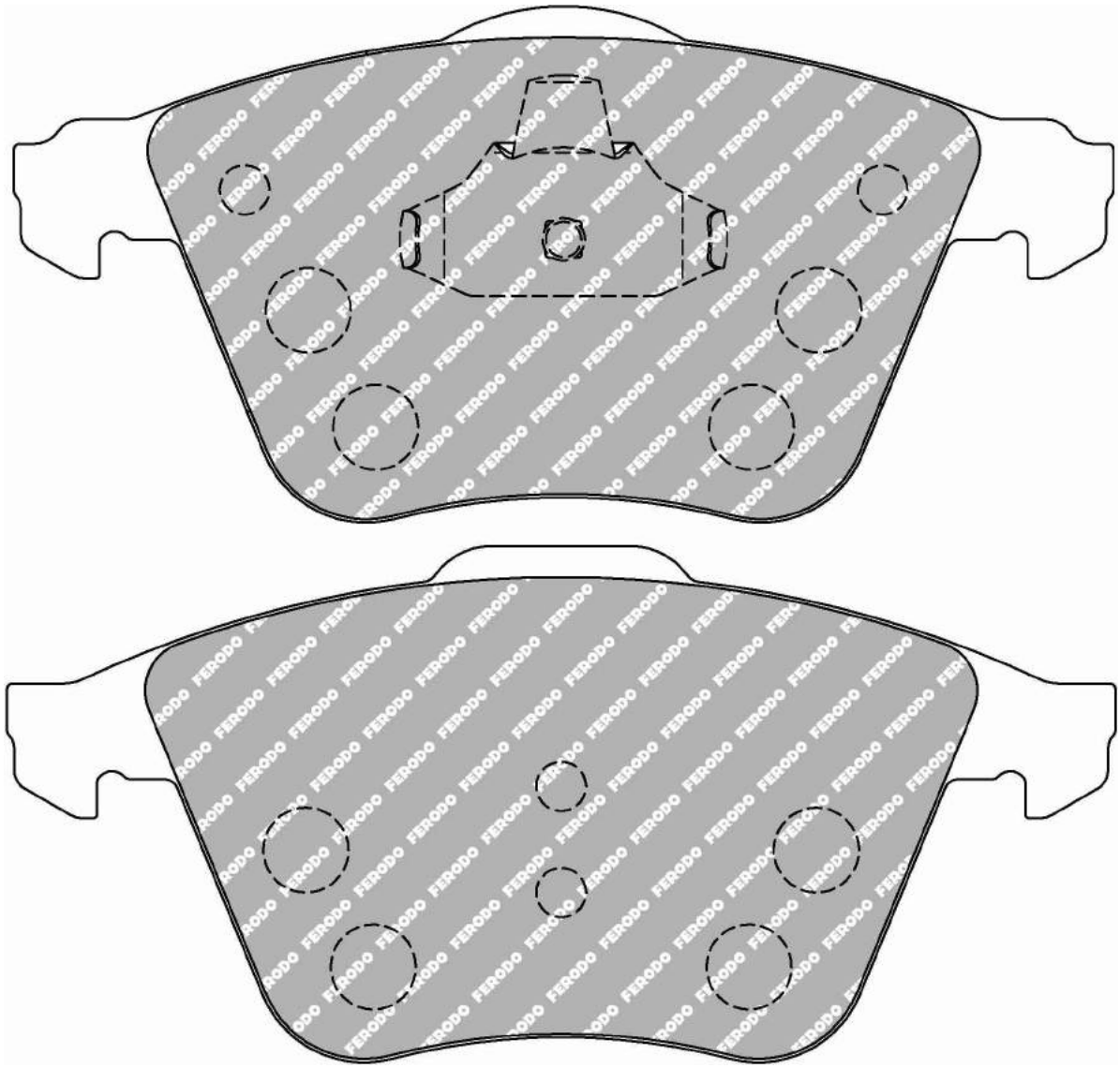

MATERIAL AVAILABILITY						
H	C	R	W	WB	Z	ZB
✔						

CROSS REFERENCE	
OE AUDI	8J0698151A
OE AUDI	8J0698151F
OE VOLKSWAGEN	8J0698151F
OE VOLKSWAGEN	8P0698151
PAGID	T1350
TRW	GDB1809
WVA	23801

FERODO RACING

Updated on November 2020

Available
Out of Range
In Introduction
Exhausting
Make to order

FCP4249

WVA No: 24709 18,00 - 24710 18,00



155.2mm = 6.110"
156.4mm = 6.157"

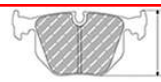

62.8mm = 2.472"
68.4mm = 2.693"



17.9mm = 0.705"
17.9mm = 0.705"



55.4mm = 2.181"
55.4mm = 2.181"

RENAULT Front

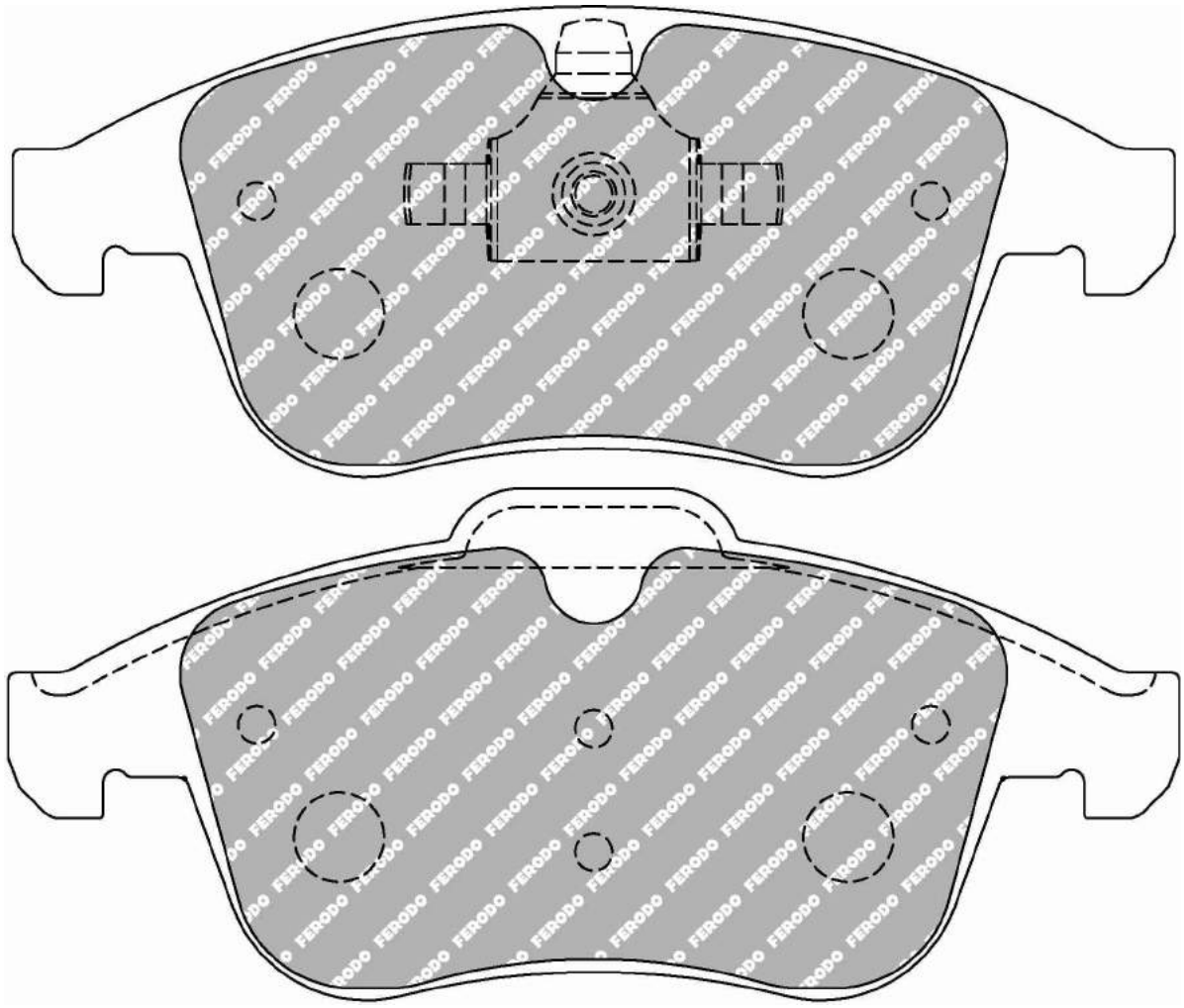

MATERIAL AVAILABILITY						
H	C	R	W	WB	Z	ZB
✔			✔		✉	

CROSS REFERENCE	
MINTEX	MDB3044
OE Renault	410605055R
OE Renault	440608746R
WVA	24709 18,00 - 24710 18,00

✔ Available
✖ Out of Range
In Introduction
Exhausting
Make to order

FERODO RACING

Updated on November 2020

FCP4262

WVA No: 25031


148.2mm = 5.835"

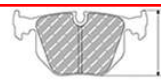
60.9mm = 2.398"


18.1mm = 0.713"


51mm = 2.008"

CHEVROLET Front, OPEL Front, VAUXHALL Front

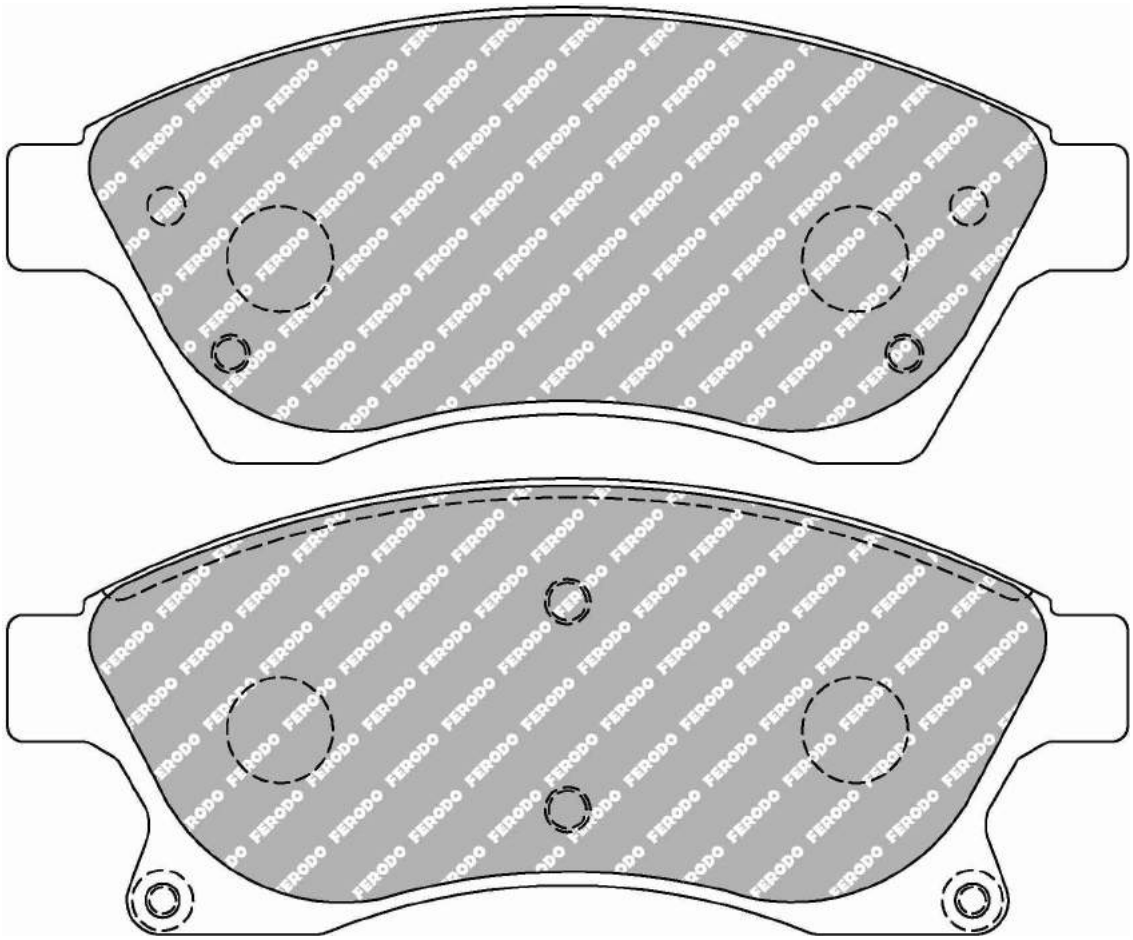

H available from May 2018

MATERIAL AVAILABILITY						
H	C	R	W	WB	Z	ZB
✔			✔			

CROSS REFERENCE	
WVA	25031

FERODO RACING

Updated on November 2020

Available
Out of Range
In Introduction
Exhausting
Make to order

FCP4308

WVA No: 25156, 25157


95.8mm = 3.772"

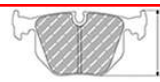
48.5mm = 1.909"


17.7mm = 0.697"


42.9mm = 1.689"

ALFA ROMEO Rear

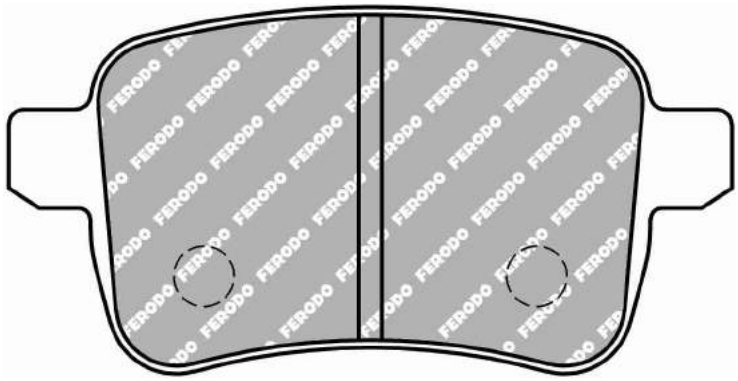

Available from May 2018

MATERIAL AVAILABILITY						
H	C	R	W	WB	Z	ZB
✔						

CROSS REFERENCE	
BREMBO	P23133
LUCAS/TRW	GDB1905
OE ALFA ROMEO	71770092
OE ALFA ROMEO	77365357
PAGID	T2011
WVA	25156, 25157

FCP4316


109.5mm = 4.311"

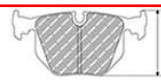
53.6mm = 2.110"


15.6mm = 0.614"

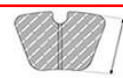
46.3mm = 1.823"

AUDI Rear, SEAT Rear, SKODA Rear, VOLKSWAGEN Rear

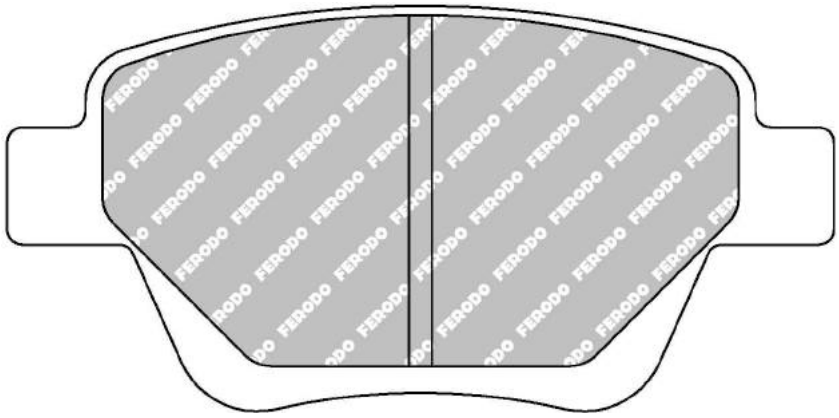

MATERIAL AVAILABILITY						
H	C	R	W	WB	Z	ZB
✔		✉				

CROSS REFERENCE	
MINTEX	MDB2972
PAGID	4936

FCP4327

WVA No: 24680


145.55mm = 5.730"

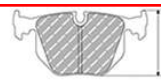
56.6mm = 2.228"


15.5mm = 0.610"


48mm = 1.890"

NISSAN Front, TOYOTA Front

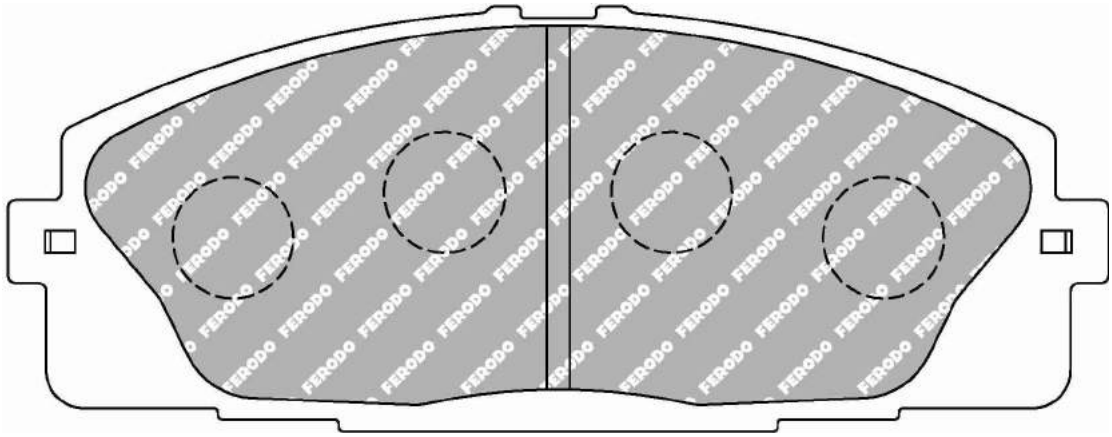

MATERIAL AVAILABILITY						
H	C	R	W	WB	Z	ZB
✔						

CROSS REFERENCE	
WVA	24680

FERODO RACING

Updated on November 2020

Available
Out of Range
In Introduction
Exhausting
Make to order

FCP4353


149.5mm = 5.886"

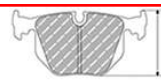
52.5mm = 2.067"


17.2mm = 0.677"


46.5mm = 1.831"

ABARTH Front

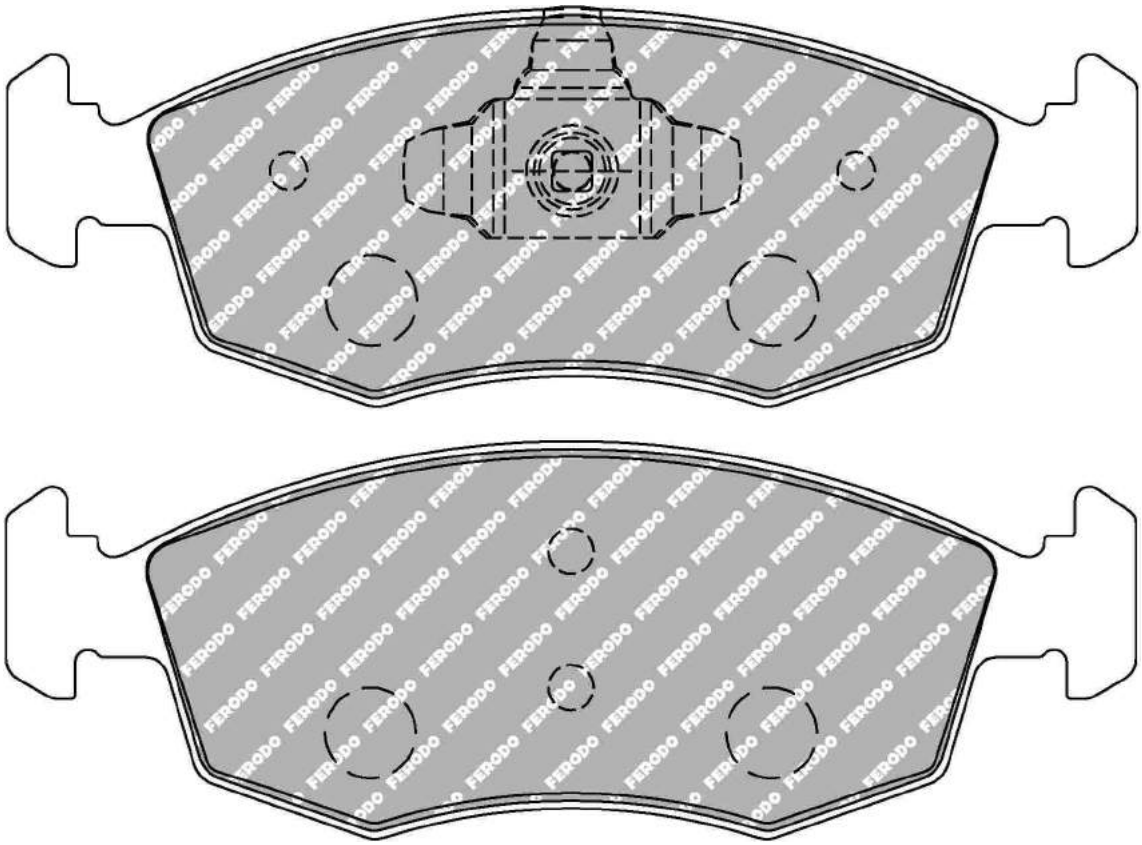

MATERIAL AVAILABILITY						
H	C	R	W	WB	Z	ZB
✉						

CROSS REFERENCE	
MINTEX	MDB3208
MINTEX	MDB3233

FCP4354


167.2mm = 6.583"

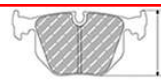
59.7mm = 2.350"


17.6mm = 0.693"


50.1mm = 1.972"

LEXUS Front, TOYOTA Front

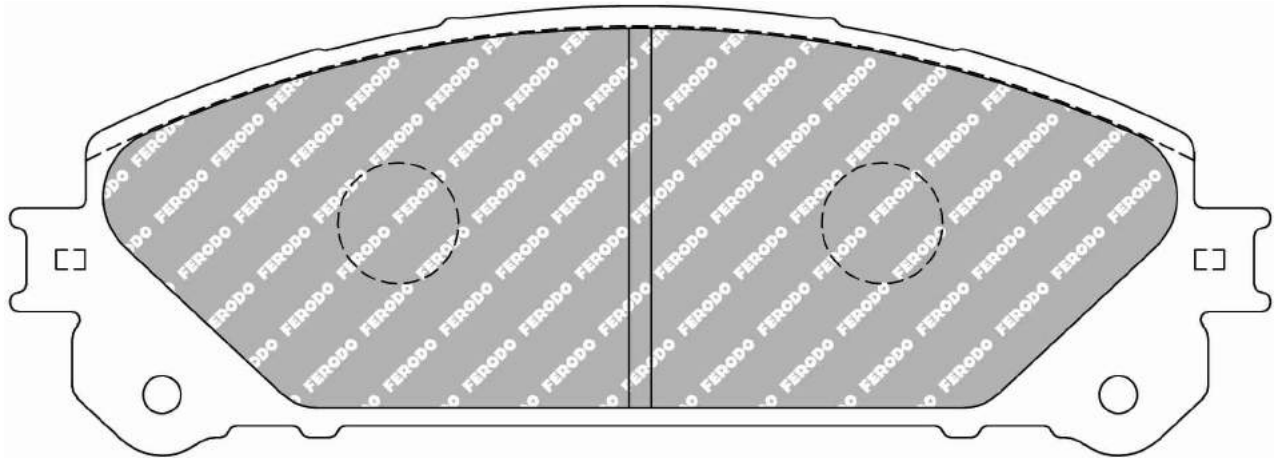

MATERIAL AVAILABILITY						
H	C	R	W	WB	Z	ZB
✔						

CROSS REFERENCE	
LUCAS/TRW	GDB3484
MINTEX	MDB3114
OE LEXUS	0446548150
OE LEXUS	0446548160
OE LEXUS	0446548190
PAGID	T1997

FERODO RACING

Updated on November 2020

Available
Out of Range
In Introduction
Exhausting
Make to order

FCP4379

WVA No: 24659


189.7mm = 7.469"

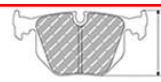
96.4mm = 3.795"


16.6mm = 0.654"


76mm = 2.992"

LAND ROVER Front

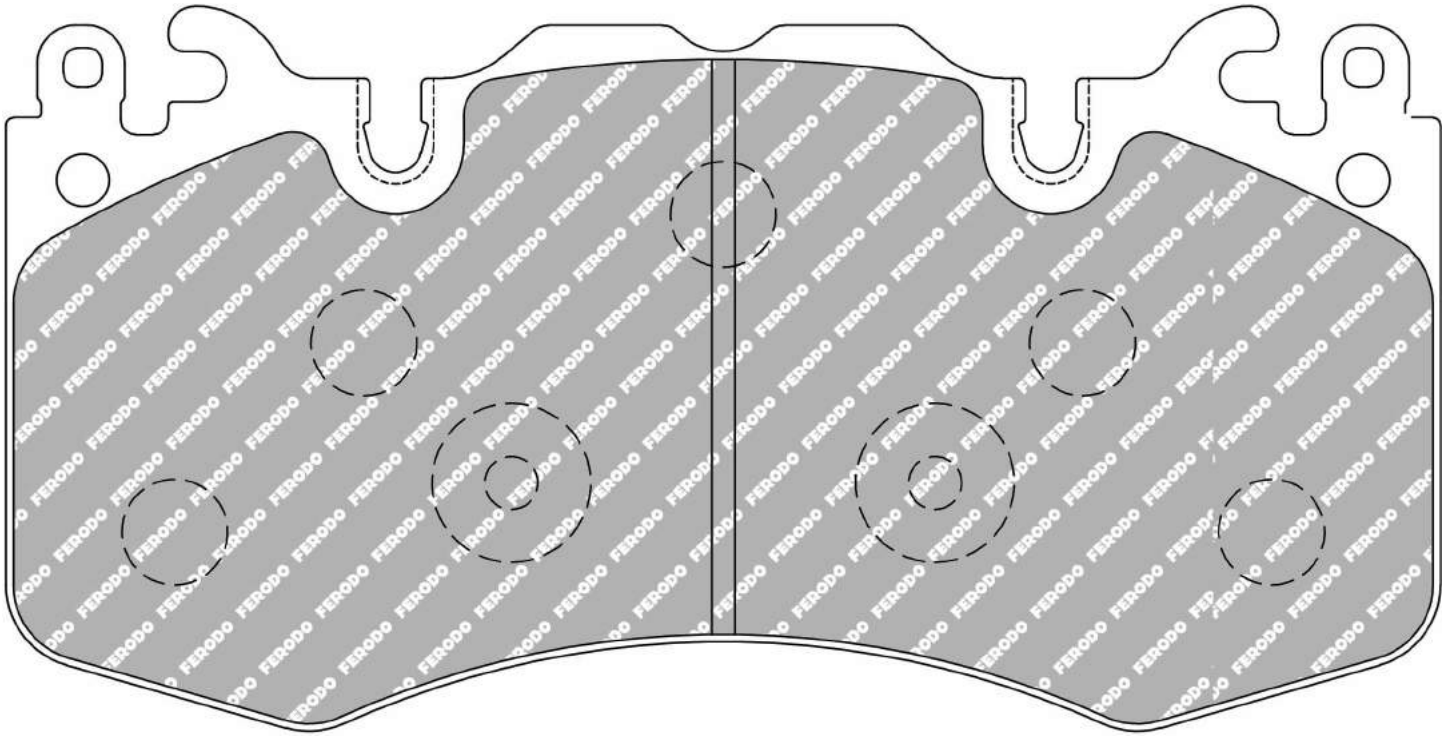

MATERIAL AVAILABILITY						
H	C	R	W	WB	Z	ZB
✔						

CROSS REFERENCE	
WVA	24659

✔ Available
✖ Out of Range
In Introduction
Exhausting
Make to order

FERODO RACING

Updated on November 2020

FCP4381

WVA No: 24703



116.2mm = 4.575"
116.2mm = 4.575"

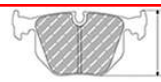

66.3mm = 2.610"
74.5mm = 2.933"



18mm = 0.709"
18mm = 0.709"



63.5mm = 2.500"
63.5mm = 2.500"

BMW Rear

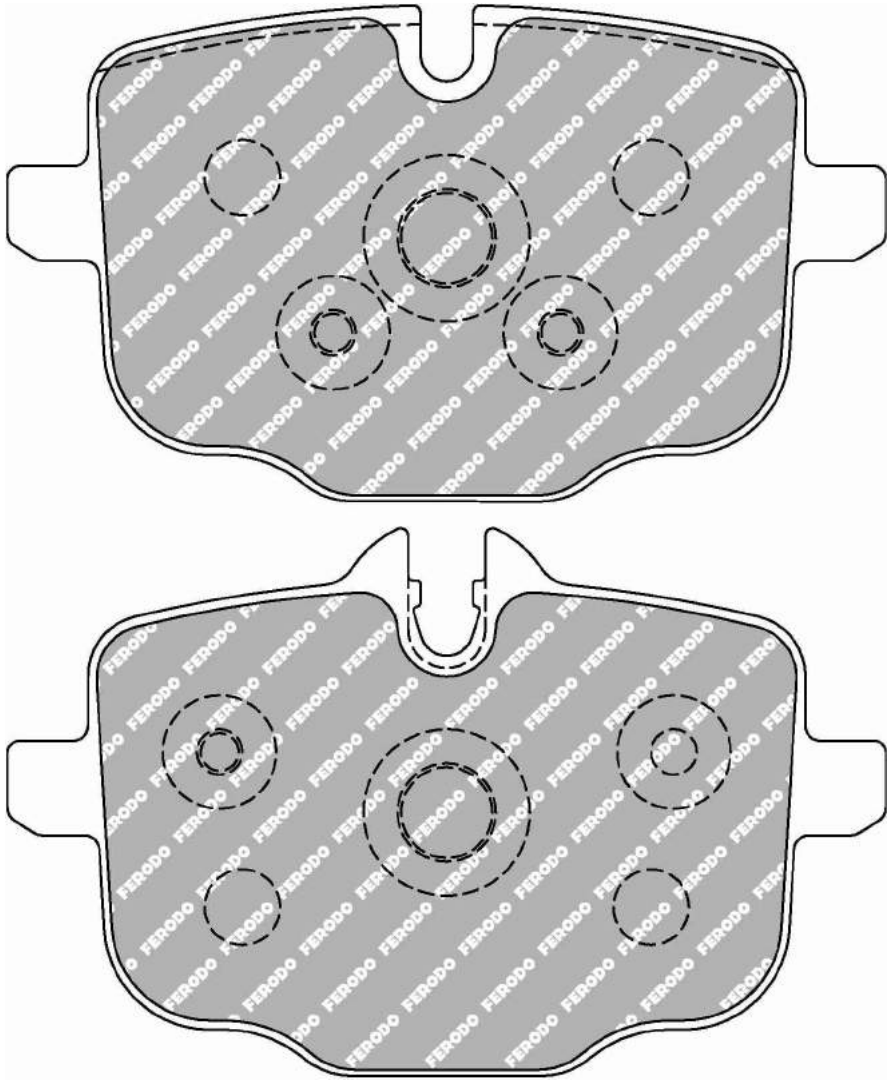

MATERIAL AVAILABILITY						
H	C	R	W	WB	Z	ZB
✔						

CROSS REFERENCE	
MINTEX	MDB3894
PAGID	4932
WVA	24703

FERODO RACING

Updated on November 2020

Available
Out of Range
In Introduction
Exhausting
Make to order

FCP4394

WVA No: 25199


148.45mm = 5.844"
148.45mm = 5.844"

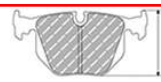
70mm = 2.756"
70mm = 2.756"


19.2mm = 0.756"
19.2mm = 0.756"


67.7mm = 2.665"
67.7mm = 2.665"

BMW Front

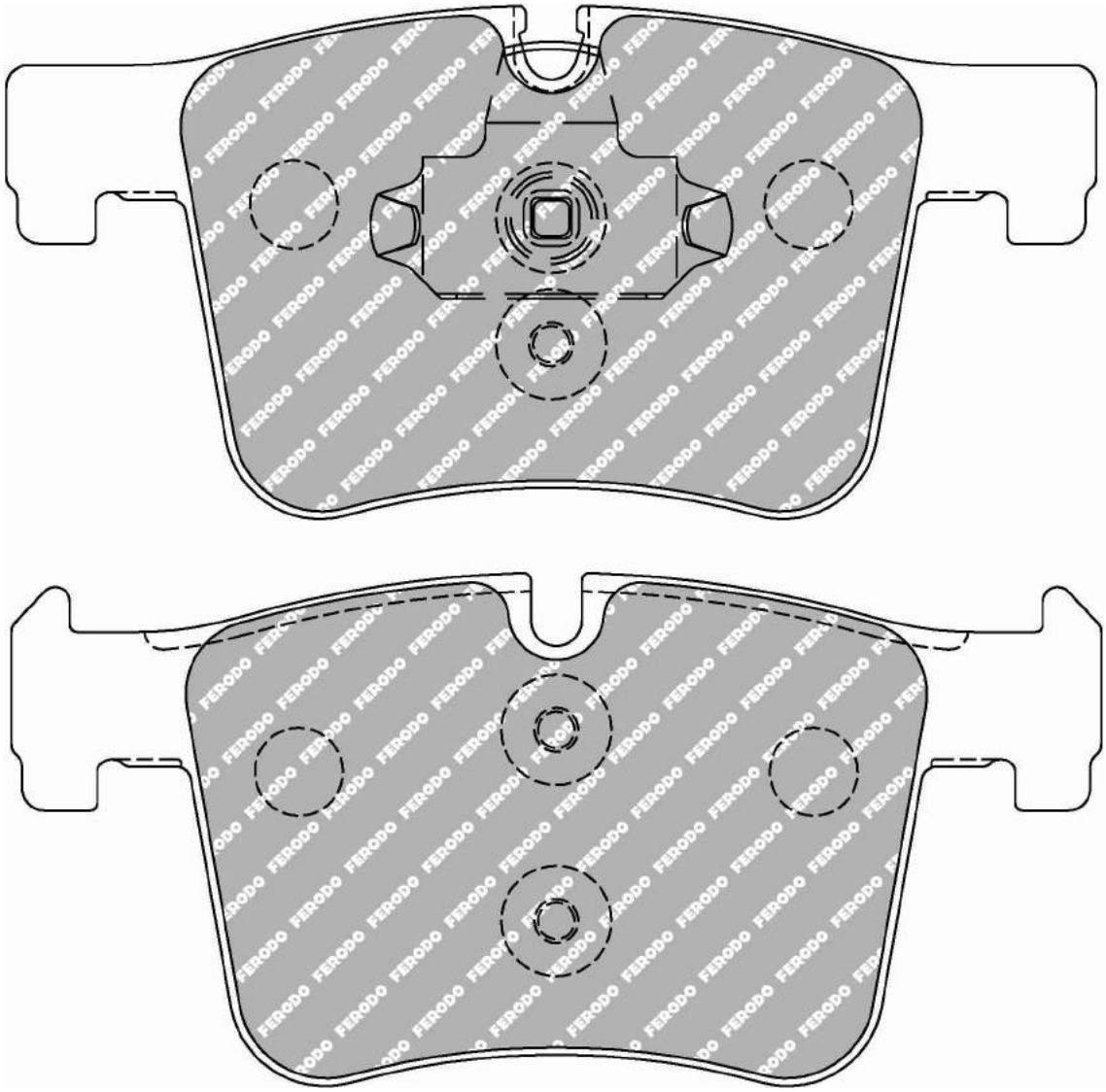

MATERIAL AVAILABILITY						
H	C	R	W	WB	Z	ZB
✔						

CROSS REFERENCE	
WVA	25199

✔ Available
✘ Out of Range
In Introduction
Exhausting
Make to order

FERODO RACING

Updated on November 2020

FCP4404

WVA No: 24979


136.55mm = 5.376"

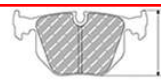
56.9mm = 2.240"


16.9mm = 0.665"


45.25mm = 1.781"

HONDA Front

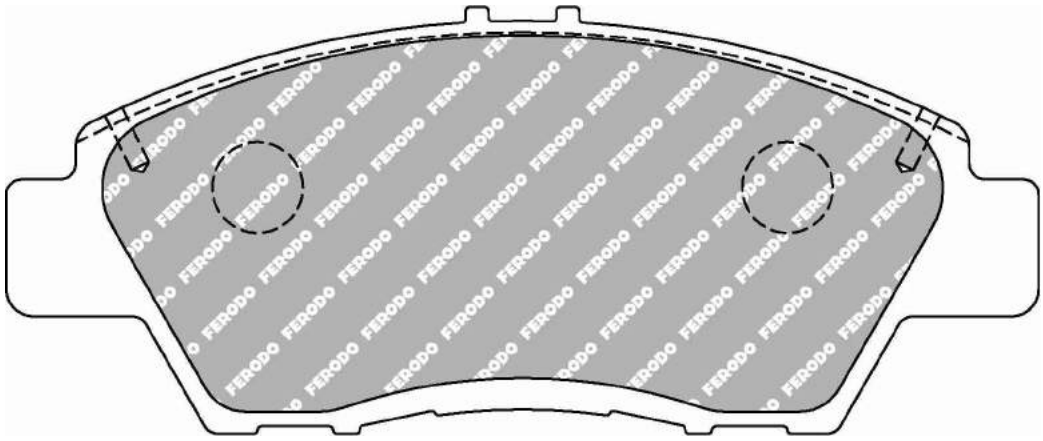

MATERIAL AVAILABILITY						
H	C	R	W	WB	Z	ZB
✔						

CROSS REFERENCE	
WVA	24979

FERODO RACING

Updated on November 2020

Available
Out of Range
In Introduction
Exhausting
Make to order

FCP4412

WVA No: 24205



138.7mm = 5.461"
138.7mm = 5.461"

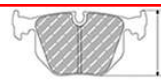

73.9mm = 2.909"
73.9mm = 2.909"



16.7mm = 0.657"
16.7mm = 0.657"



68.5mm = 2.697"
68.5mm = 2.697"

MERCEDES Front

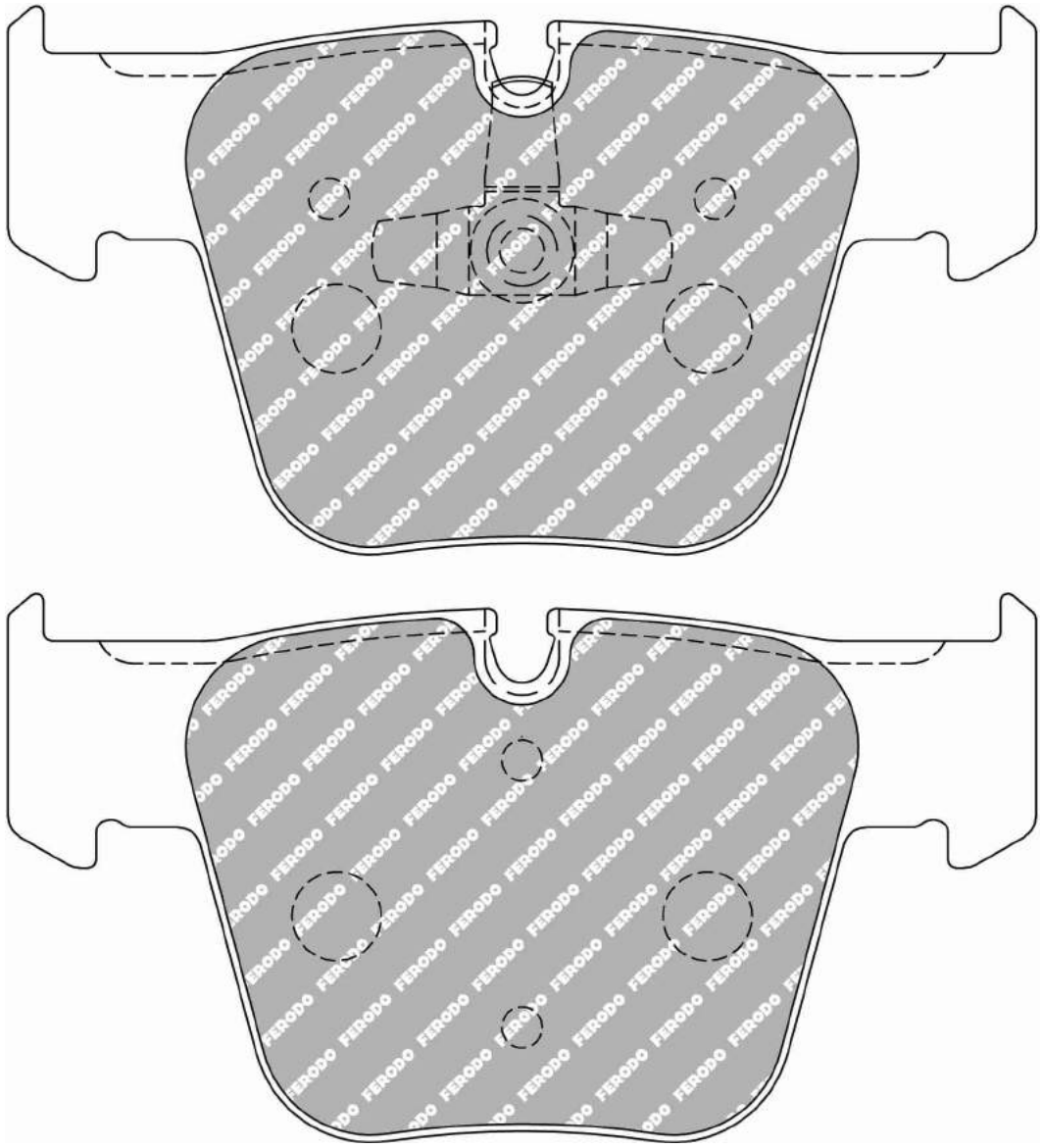

MATERIAL AVAILABILITY						
H	C	R	W	WB	Z	ZB
✔						

CROSS REFERENCE	
OE MERCEDES	0044207520
WVA	24205

✔ Available
✖ Out of Range
In Introduction
Exhausting
Make to order

FERODO RACING

Updated on November 2020

FCP4413

WVA No: 24180, 24181



141.25mm = 5.561"
141.25mm = 5.561"

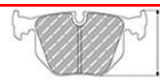

61.6mm = 2.425"
61.6mm = 2.425"



16.8mm = 0.661"
16.8mm = 0.661"



57.5mm = 2.264"
57.5mm = 2.264"

MERCEDES Rear

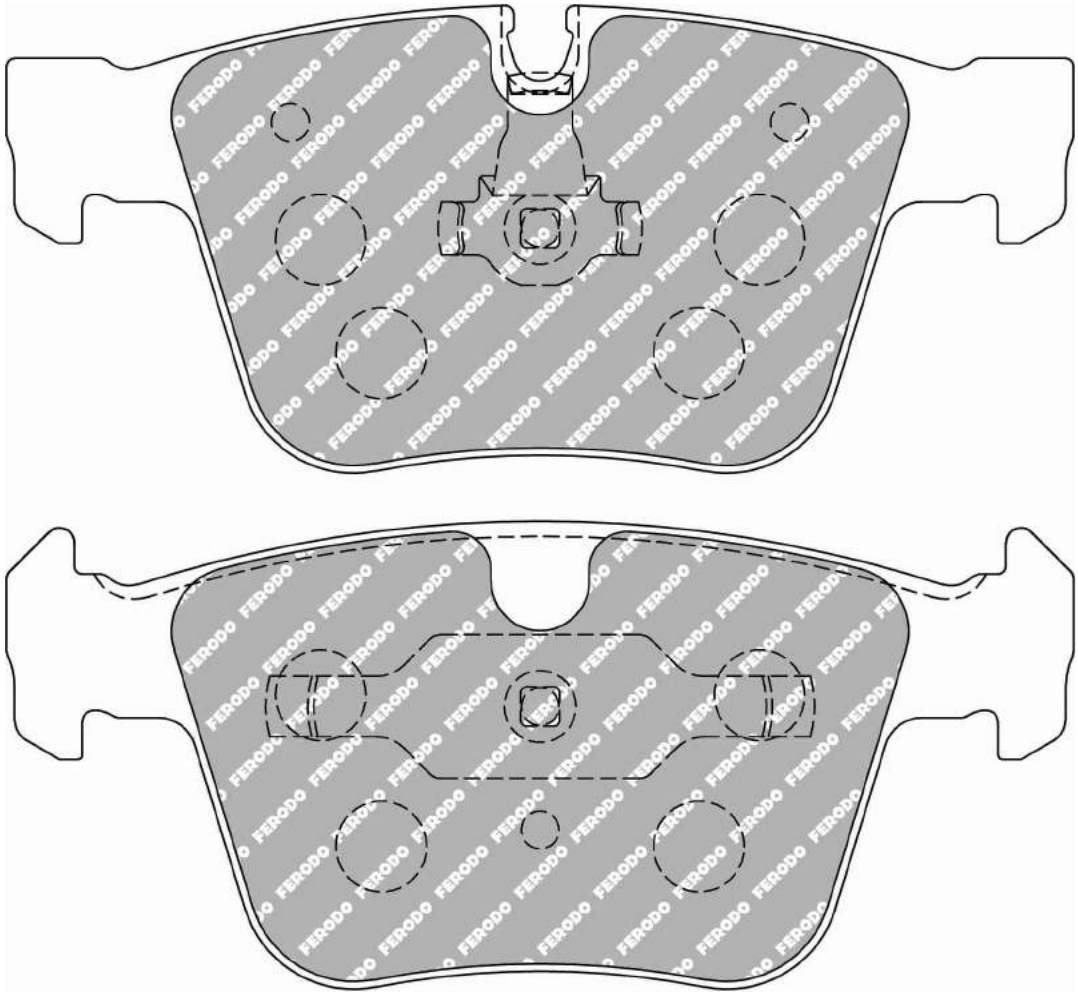

In Introduction - September 2018

MATERIAL AVAILABILITY						
H	C	R	W	WB	Z	ZB

CROSS REFERENCE	
OE MERCEDES	1644201020
OE MERCEDES	1644202420
PAGID	T1735
WVA	24180, 24181

FERODO RACING

Updated on November 2020

Available
Out of Range
In Introduction
Exhausting
Make to order

FCP4416

WVA No: 25737 17,40 - 25736 17,40


180.3mm = 7.098"

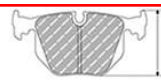
65.9mm = 2.594"

18.0mm = 0.709"


55.5mm = 2.185"



FORD Front

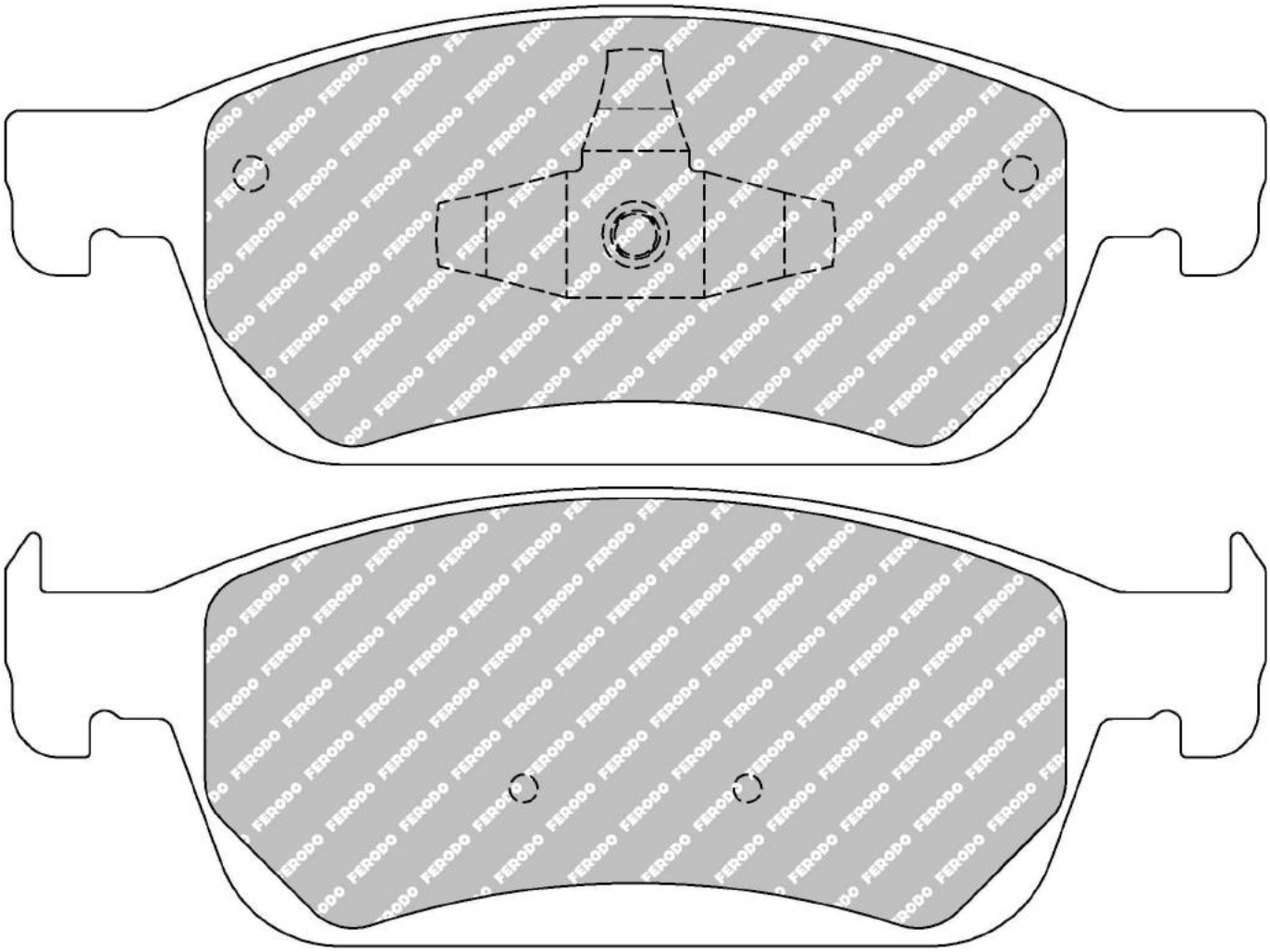

MATERIAL AVAILABILITY						
H	C	R	W	WB	Z	ZB
✔						

CROSS REFERENCE	
MINTEX	MDB3364
WVA	25737 17,40 - 25736 17,40

✔ Available
✖ Out of Range
In Introduction
Exhausting
Make to order

FERODO RACING

Updated on November 2020

FCP4425

WVA No: 24738 19,8


175.2mm = 6.898"

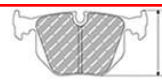
69.5mm = 2.736"


19.8mm = 0.780"


64.5mm = 2.539"

AUDI Front, SEAR Front, SEAT Front, SKODA Front, VOLKSWAGEN Front

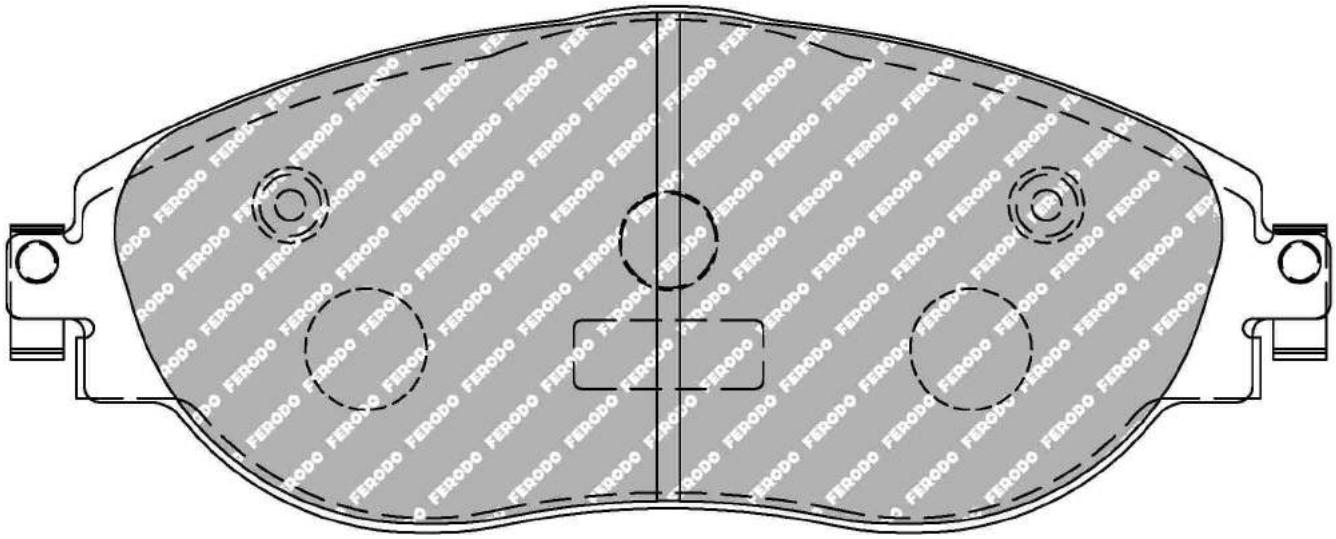

N.B. The two side clips must be opened in order to create a sufficient tension between pad and caliper to avoid pad movement

MATERIAL AVAILABILITY						
H	C	R	W	WB	Z	ZB
✔						

CROSS REFERENCE	
MINTEX	MDB3173
PAGID	8201
WVA	24738 19,8

FERODO RACING

Updated on November 2020

Available
Out of Range
In Introduction
Exhausting
Make to order

FCP4426

WVA No: 24283
FMSI No: D1454


125.7mm = 4.949"

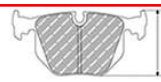
52.0mm = 2.047"


16.4mm = 0.646"


43.0mm = 1.693"

FORD Front, MAZDA Front, SUZUKI Front

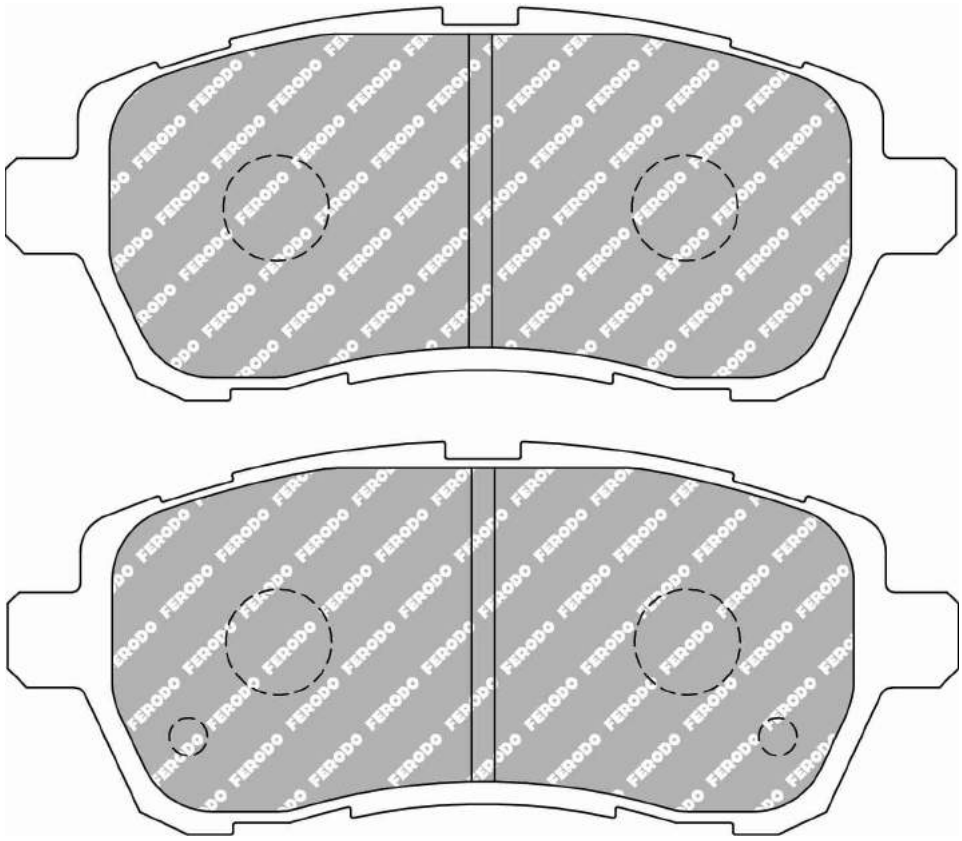

MATERIAL AVAILABILITY						
H	C	R	W	WB	Z	ZB
✔		✔			✔	

CROSS REFERENCE	
EBC	DPX2002
FMSI	D1454
HAWK	HB668
MINTEX	MDB2875
WVA	24283

FCP4430

WVA No: 25258

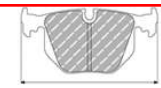
98.6mm = 3.882"

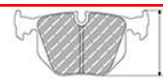
40.1mm = 1.579"


14.5mm = 0.571"


36.5mm = 1.437"

SUZUKI Rear

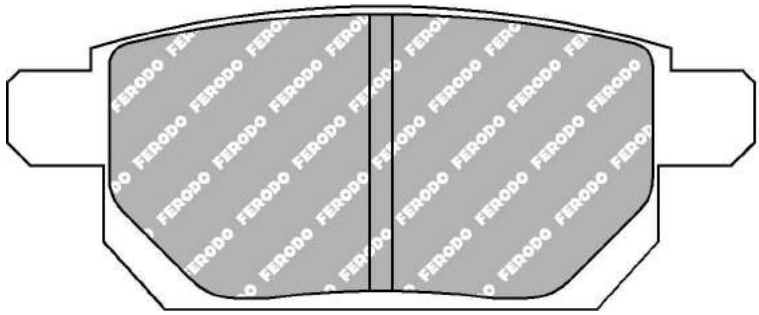

MATERIAL AVAILABILITY						
H	C	R	W	WB	Z	ZB
✔						

CROSS REFERENCE	
MINTEX	MDB3168
WVA	25258

FCP4433

WVA No: 25086 20,20 or 25683-25684 20,30


160.3mm = 6.311"

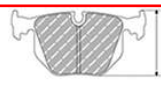
64.5mm = 2.539"


20.3mm = 0.799"

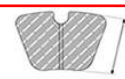
61.5mm = 2.421"

AUDI Front, SEAT Front, SKODA Front, VOLKSWAGEN Front

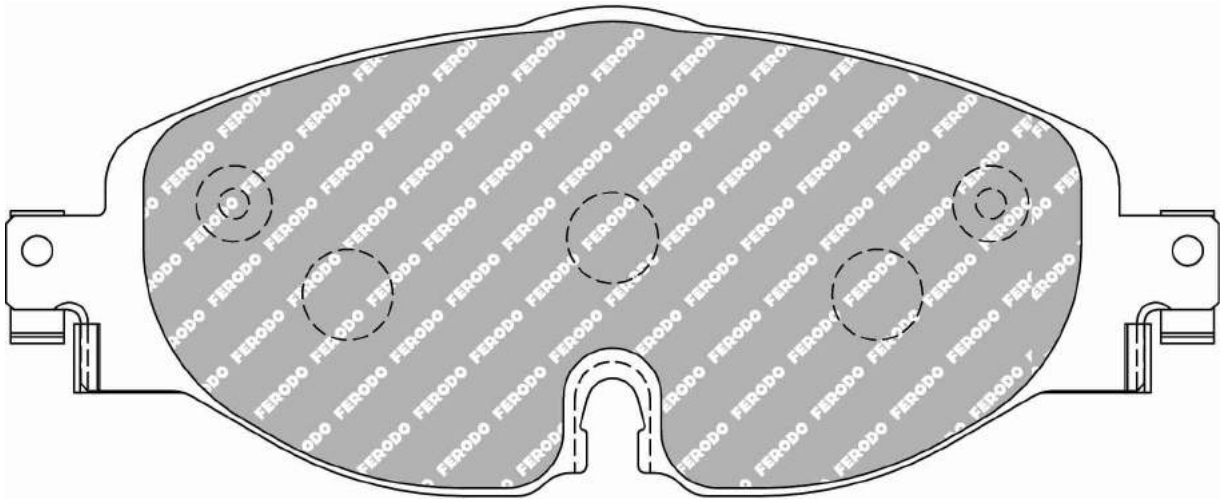

N.B. The two side clips must be opened in order to create a sufficient tension between pad and caliper to avoid pad movement

MATERIAL AVAILABILITY						
H	C	R	W	WB	Z	ZB
✔					✔	

CROSS REFERENCE	
MINTEX	MDB3340
OE AUDI	8V0698151
OE AUDI	8V0698151B
PAGID	T2239
WVA	25086 20,20 or 25683-25684 20,30

FERODO RACING

Updated on November 2020

✔ Available
✖ Out of Range
In Introduction
Exhausting
Make to order

FCP4434

WVA No: 25008, 25010



123.25mm = 4.852"
123.25mm = 4.852"

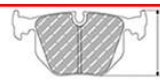

56.2mm = 2.213"
61.2mm = 2.409"



16.6mm = 0.654"
16.6mm = 0.654"



48.5mm = 1.909"
48.5mm = 1.909"

AUDI Rear, SEAT Rear, VOLKSWAGEN Rear

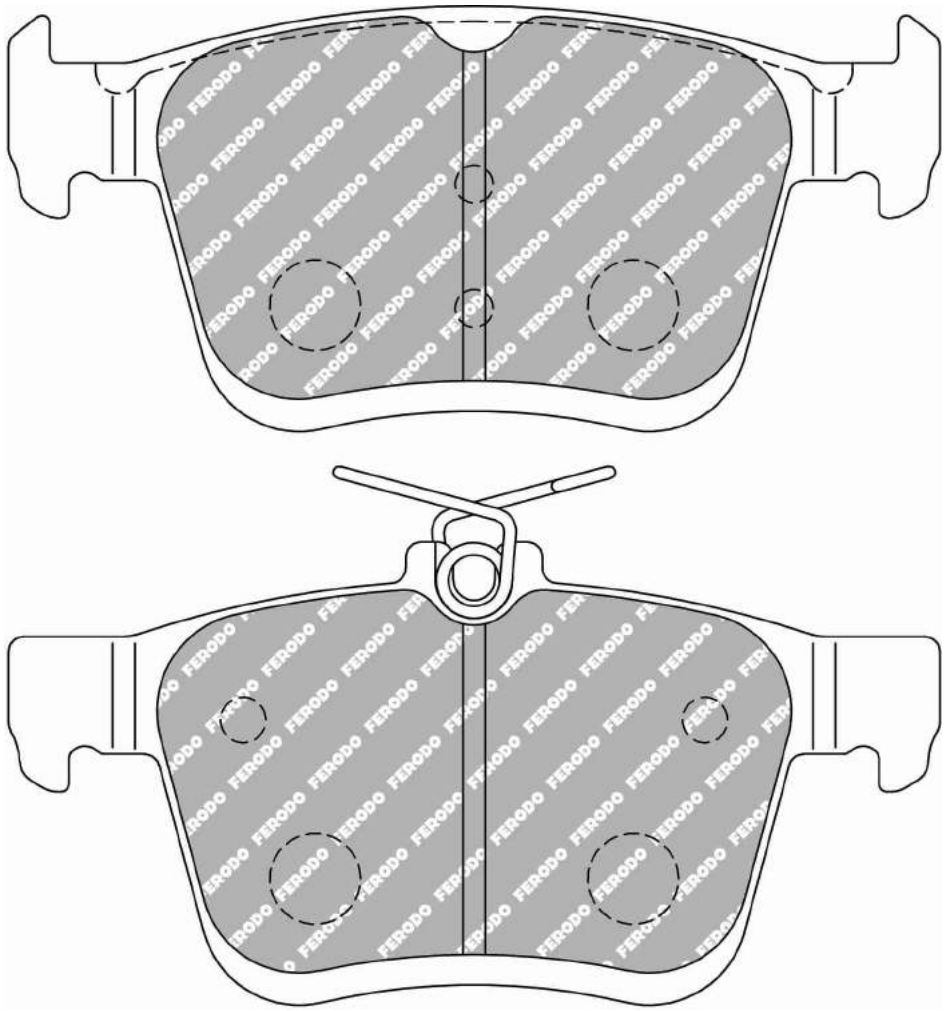

MATERIAL AVAILABILITY						
H	C	R	W	WB	Z	ZB
✔						

CROSS REFERENCE	
BOSCH	0986494659
OE AUDI	5Q0698451
OE AUDI	8V0698451
OE VOLKSWAGEN	5Q0698451
OE VOLKSWAGEN	8V0698451
PAGID	T1976
TRW	GDB1957
WVA	25008, 25010

FCP4466


189.8mm = 7.472"

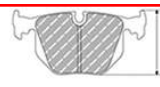
101.6mm = 4.000"


17.2mm = 0.677"


83.5mm = 3.287"

AUDI Front

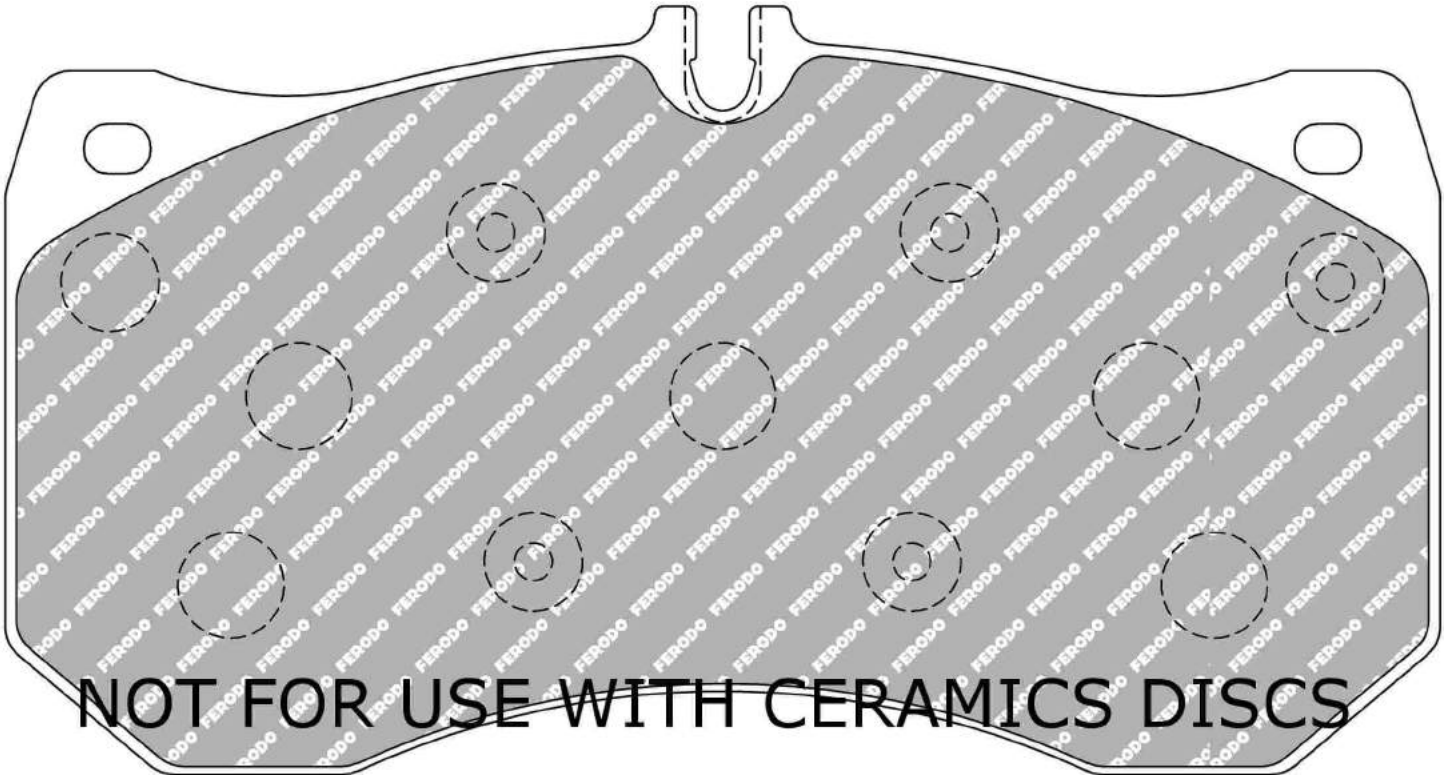

NOT FOR USE WITH CERAMICS DISCS

MATERIAL AVAILABILITY						
H	C	R	W	WB	Z	ZB
✔						

FERODO RACING

Updated on November 2020

✔ Available
✖ Out of Range
In Introduction
Exhausting
Make to order

FCP4467


176mm = 6.929"

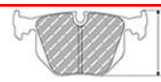
109.5mm = 4.311"


16.7mm = 0.657"


79.5mm = 3.130"

AUDI Front, PORSCHE Front

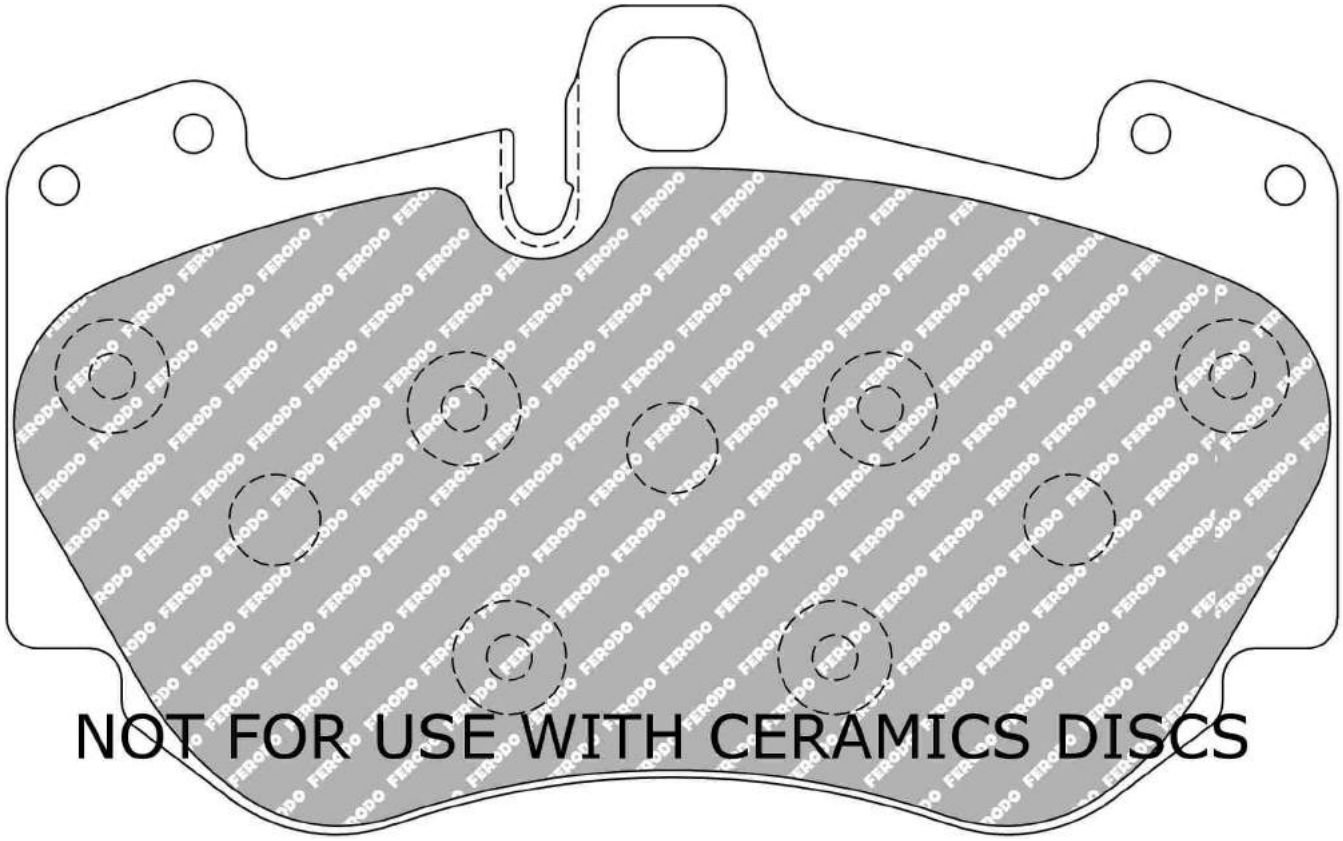

NOT FOR USE WITH CERAMICS DISCS

MATERIAL AVAILABILITY						
H	C	R	W	WB	Z	ZB
✔						

CROSS REFERENCE	
PAGID	4907

✔ Available
✖ Out of Range
In Introduction
Exhausting
Make to order

FERODO RACING

Updated on November 2020

FCP4468

WVA No: 24847
FMSI No: D1291


187.7mm = 7.390"

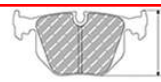
93.2mm = 3.669"


16.8mm = 0.661"


69mm = 2.717"

AUDI Front

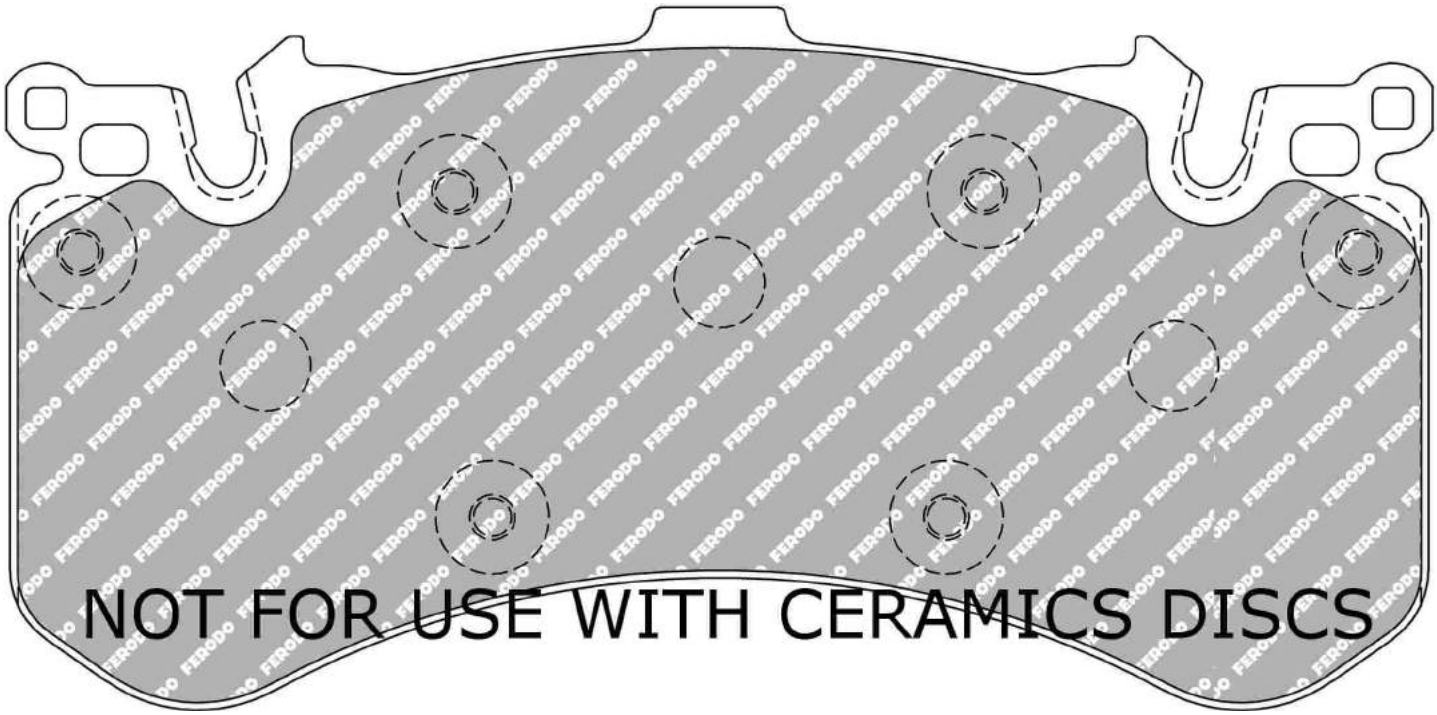

NOT FOR USE WITH CERAMICS DISCS

MATERIAL AVAILABILITY						
H	C	R	W	WB	Z	ZB
✔						

CROSS REFERENCE	
FMSI	D1291
HAWK	HB731
Raybestos	DR1291
WVA	24847

FERODO RACING
Updated on November 2020

Available
Out of Range
In Introduction
Exhausting
Make to order

FCP4489

WVA No: 24912-24913



156.95mm = 6.179"
155.95mm = 6.140"

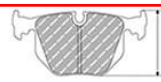

62.2mm = 2.449"
62.2mm = 2.449"



18.4mm = 0.724"
18.4mm = 0.724"



55.3mm = 2.177"
55.3mm = 2.177"

BMW Front, OPEL Front

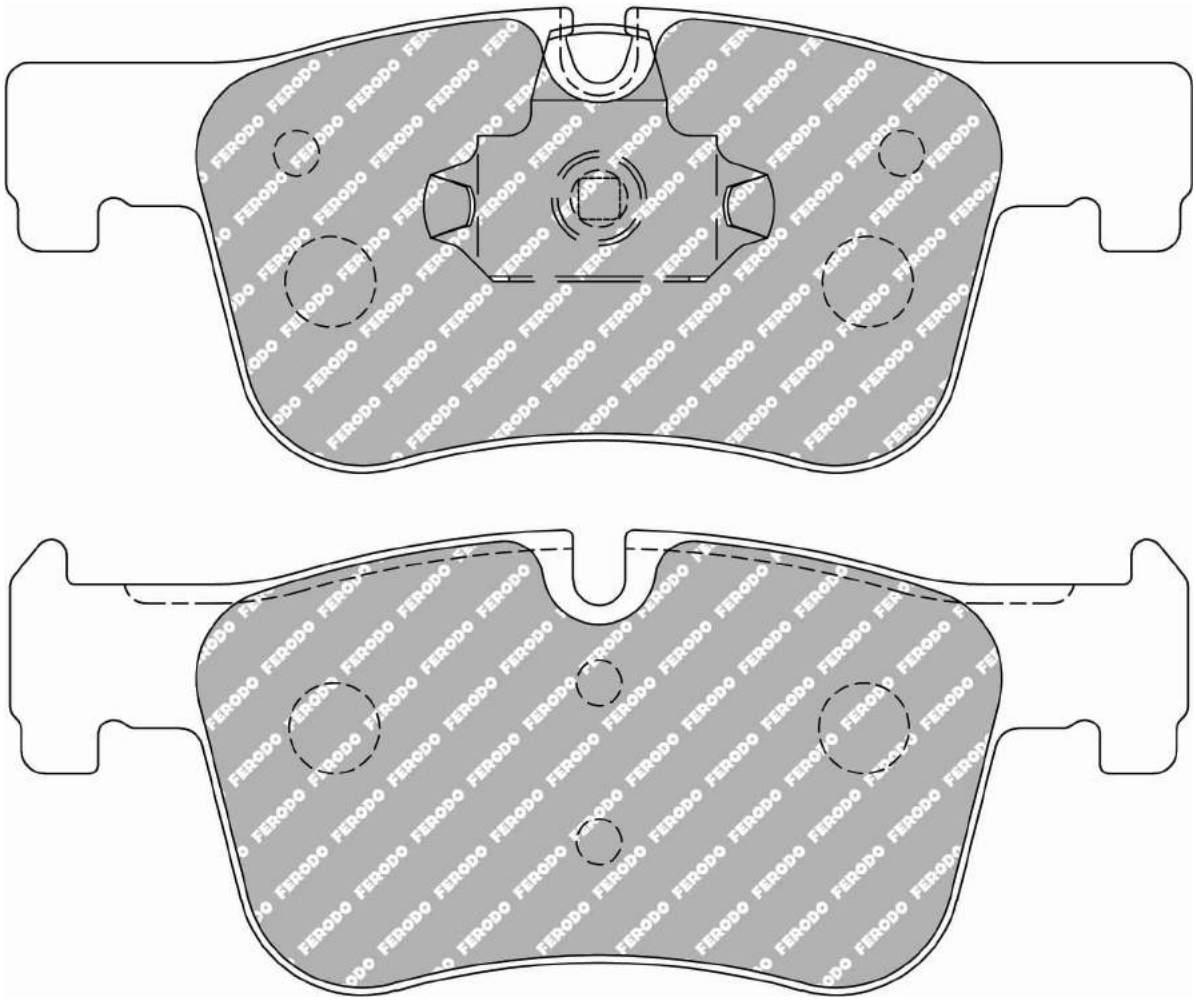

MATERIAL AVAILABILITY						
H	C	R	W	WB	Z	ZB
✔					✉	

CROSS REFERENCE	
OE BMW	34 11 6 850 568
WVA	24912-24913

✔ Available
✖ Out of Range
In Introduction
Exhausting
Make to order

FERODO RACING

Updated on November 2020

FCP4587

WVA No: 25216, 25215



116.4mm = 4.583"
116.4mm = 4.583"

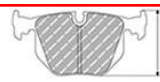

59.6mm = 2.346"
49.8mm = 1.961"



16.5mm = 0.650"
16.5mm = 0.650"



44mm = 1.732"
44mm = 1.732"

MERCEDES Rear

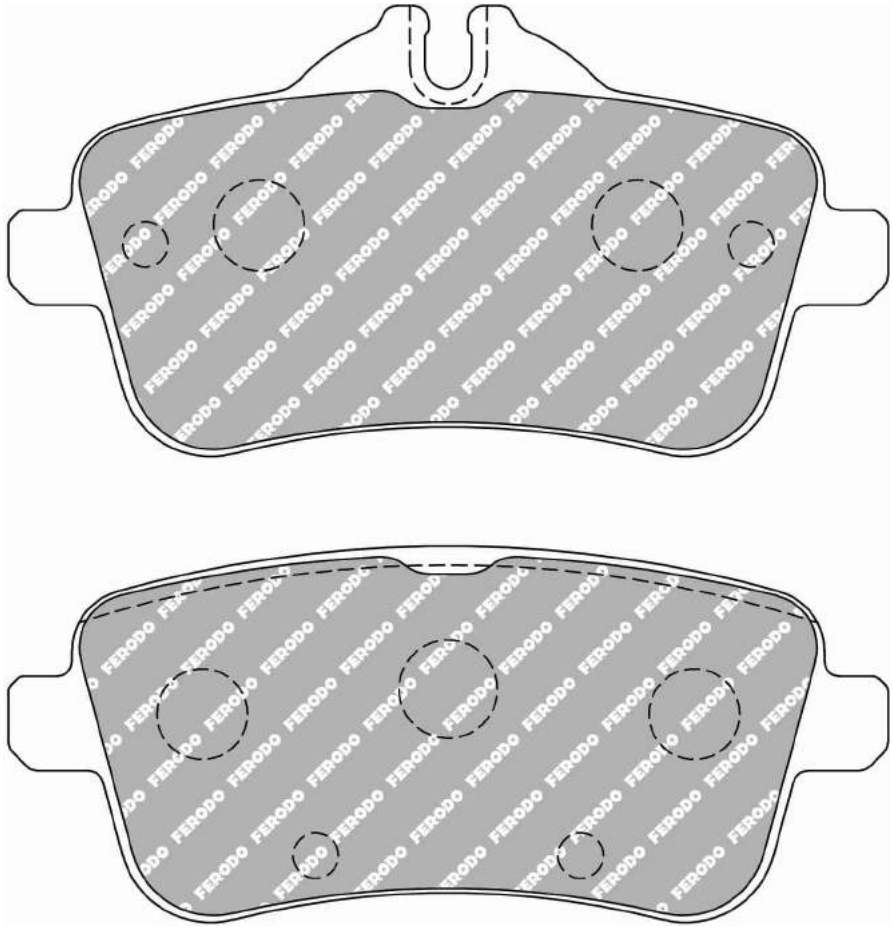

MATERIAL AVAILABILITY						
H	C	R	W	WB	Z	ZB
✔						

CROSS REFERENCE	
MINTEX	MDB3315
OE MERCEDES	0064203520
OE MERCEDES	0064206320
PAGID	T2151
PAGID	T2214
WVA	25216, 25215

FERODO RACING

Updated on November 2020

✔ Available
✖ Out of Range
In Introduction
Exhausting
Make to order

FCP4611

WVA No: 25028 18,30
FMSI No: D1609


114.74mm = 4.517"

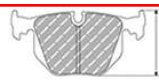
91.2mm = 3.591"


18.1mm = 0.713"


71.3mm = 2.807"

BMW Front

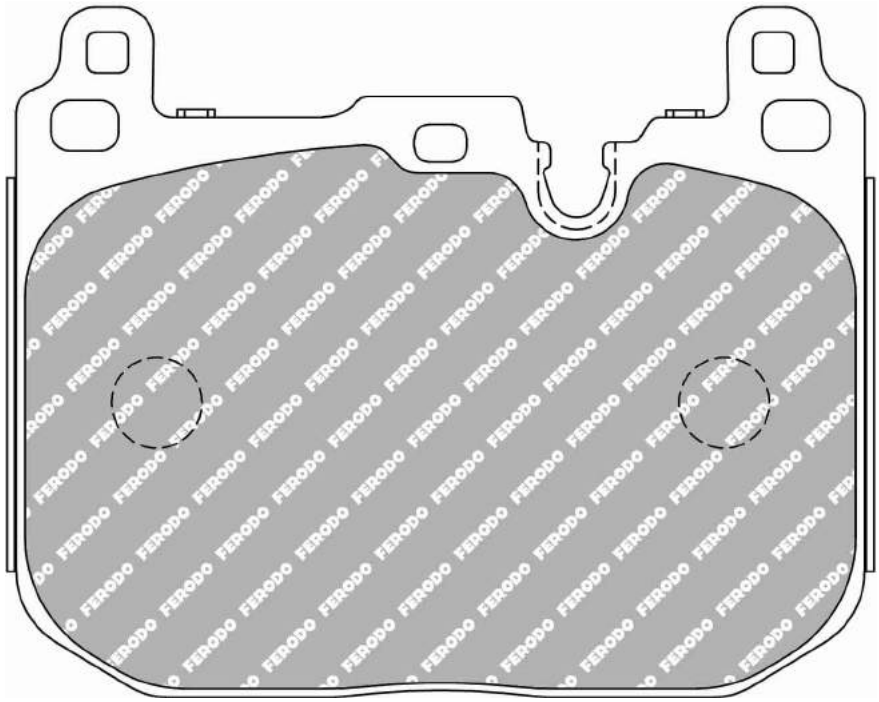

length for W & Z = 114.5 - (shim only on H compound)

ALSO AVAILABLE		
SHAPE	TH. MM	NOTES
FCP4872	15	

MATERIAL AVAILABILITY						
H	C	R	W	WB	Z	ZB
✔			✔		✔	

CROSS REFERENCE	
FMSI	D1609
OE BMW	34106799805
OE BMW	34116850850
OE BMW	34116857968
OE BMW	34116859066
OE BMW	34116859282
PAGID	T2440
WVA	25028 18,30

FCP4612

WVA No: 25134 16,70


131.8mm = 5.189"

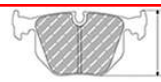
60.5mm = 2.382"


17.5mm = 0.689"


48.1mm = 1.894"

FORD Front

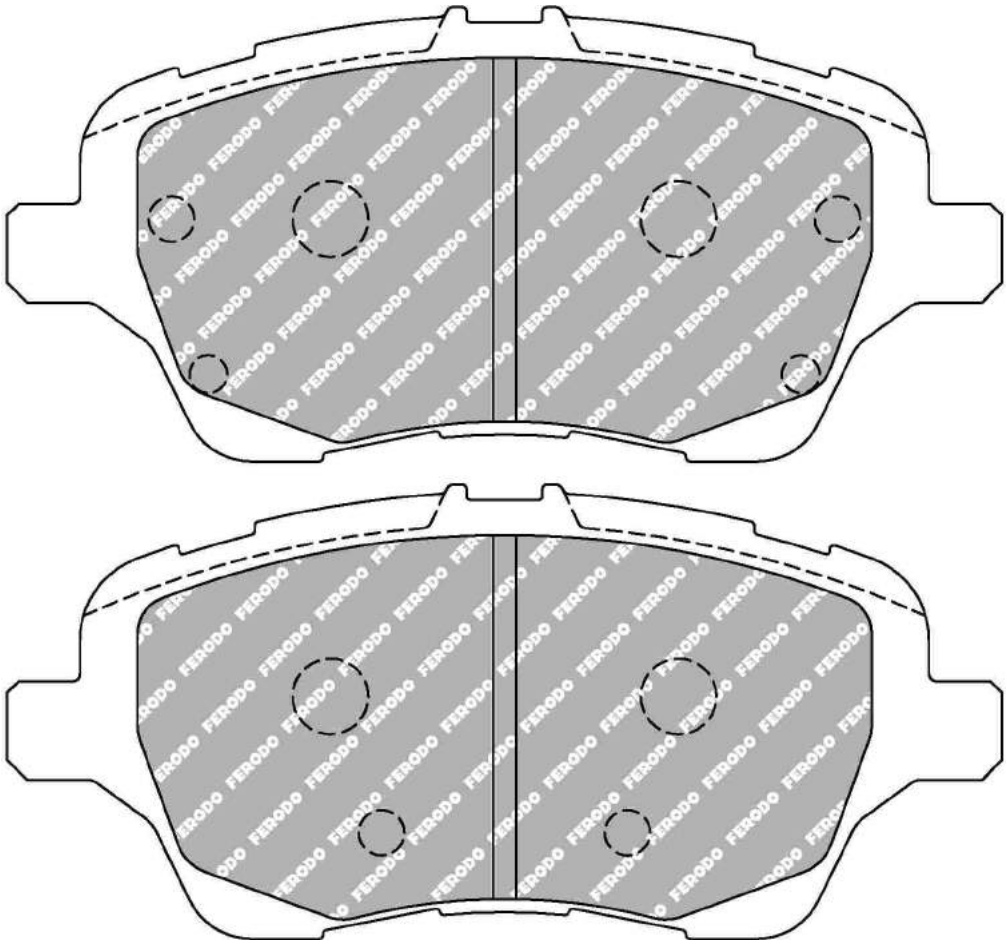

MATERIAL AVAILABILITY						
H	C	R	W	WB	Z	ZB
✔			✔			

CROSS REFERENCE	
MINTEX	MDB3322
WVA	25134 16,70

FERODO RACING

Updated on November 2020

Available
Out of Range
In Introduction
Exhausting
Make to order

FCP4663

WVA No: 25029 17,80
FMSI No: D1656


73.6mm = 2.898"

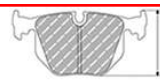
88.0mm = 3.465"


17.0mm = 0.669"


62.5mm = 2.461"

BMW Rear

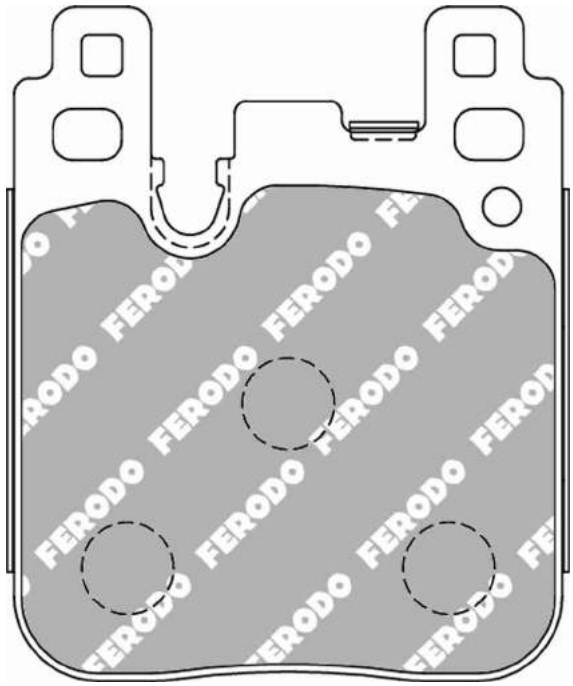

Shim available only for H material

MATERIAL AVAILABILITY						
H	C	R	W	WB	Z	ZB
✔			✉		✔	

CROSS REFERENCE	
FMSI	D1656
MINTEX	MDB3269
OE BMW	34216855474
PAGID	4933
PAGID	T2423
WVA	25029 17,80

✔ Available
✖ Out of Range
In Introduction
Exhausting
Make to order

FERODO RACING

Updated on November 2020

FCP4664


198.3mm = 7.807"

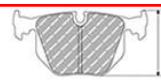
80.0mm = 3.150"


16.6mm = 0.654"


62.0mm = 2.441"

FMSI No: D1741

PORSCHE Front

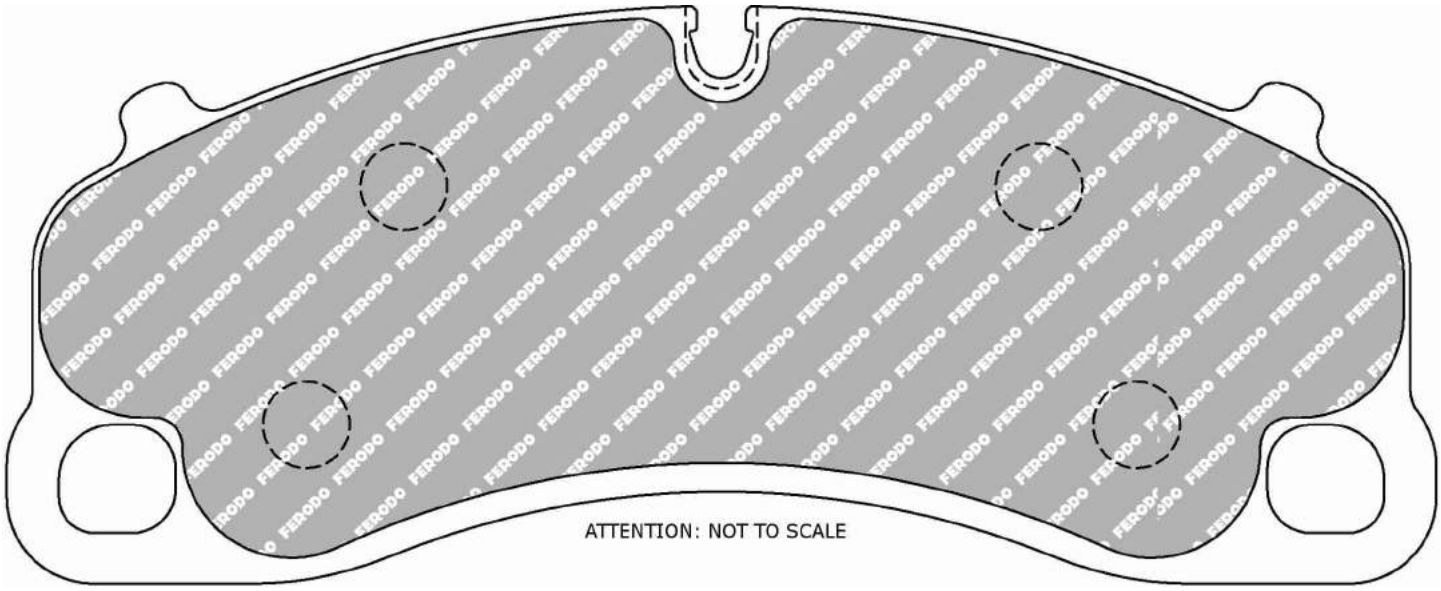

MATERIAL AVAILABILITY						
H	C	R	W	WB	Z	ZB
✔			✔		✖	✔

CROSS REFERENCE	
FMSI	D1741
PAGID	4924
PAGID	8235
Raybestos	DR1741

FERODO RACING

Updated on November 2020

✔ Available
✖ Out of Range
In Introduction
Exhausting
Make to order

FCP4665


187.7mm = 7.390"

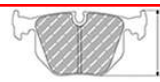
75.3mm = 2.965"


17.0mm = 0.669"


66.0mm = 2.598"

FMSI No: D1740

PORSCHE Rear

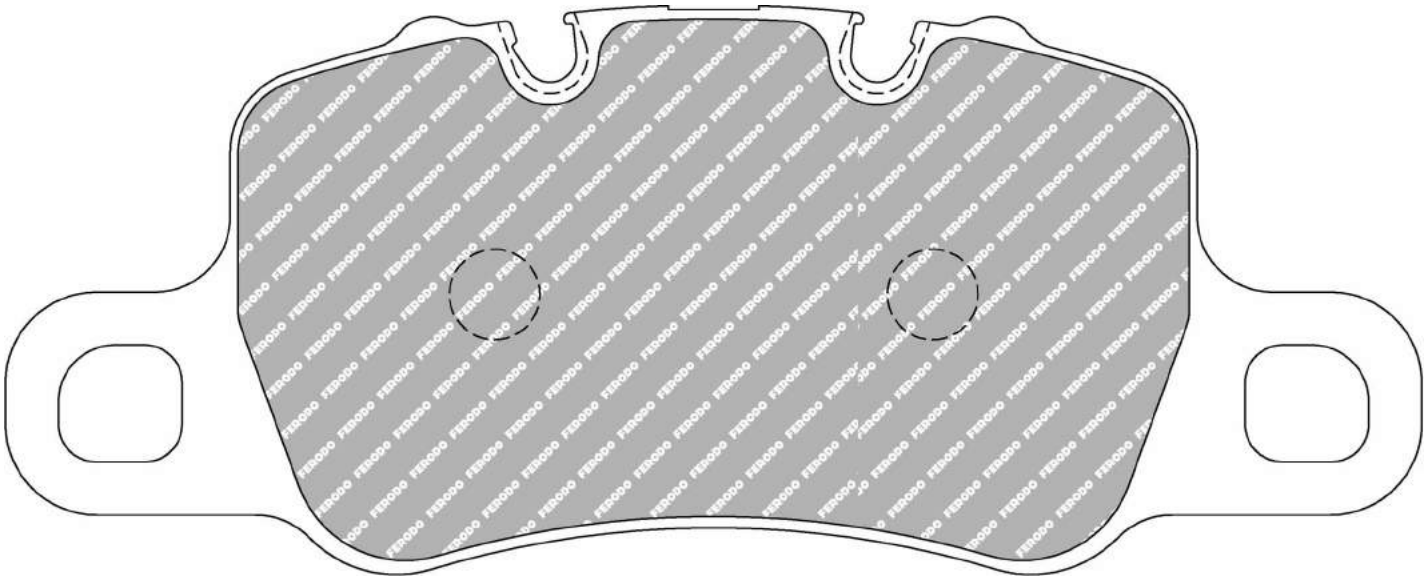

MATERIAL AVAILABILITY						
H	C	R	W	WB	Z	ZB
✔			✔		✖	✔

CROSS REFERENCE	
FMSI	D1740
OE PORSCHE	99135294881
PAGID	4925
Raybestos	DR1740

✔ Available
✖ Out of Range
In Introduction
Exhausting
Make to order

FERODO RACING

Updated on November 2020

FCP4671


126.7mm = 4.988"

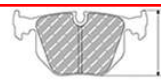
77.5mm = 3.051"


17.6mm = 0.693"


57.7mm = 2.272"

FMSI No: D1576

HYUNDAI Front

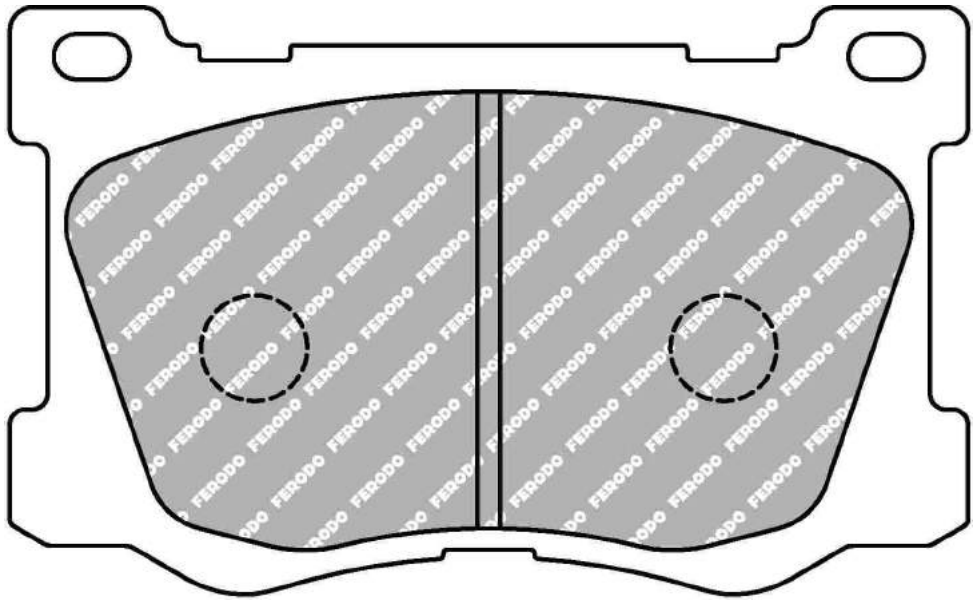

MATERIAL AVAILABILITY						
H	C	R	W	WB	Z	ZB
✔						

CROSS REFERENCE	
EBC	DP21882
FMSI	D1576

FERODO RACING

Updated on November 2020

Available
Out of Range
In Introduction
Exhausting
Make to order

FCP4697

WVA No: 25009 - 25011


123.2mm = 4.850"
123.2mm = 4.850"

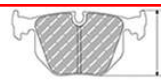
61.2mm = 2.409"
56.2mm = 2.213"


16.6mm = 0.654"
16.6mm = 0.654"


51.4mm = 2.024"
51.4mm = 2.024"

AUDI Rear, SKODA Rear, VOLKSWAGEN Front / Rear

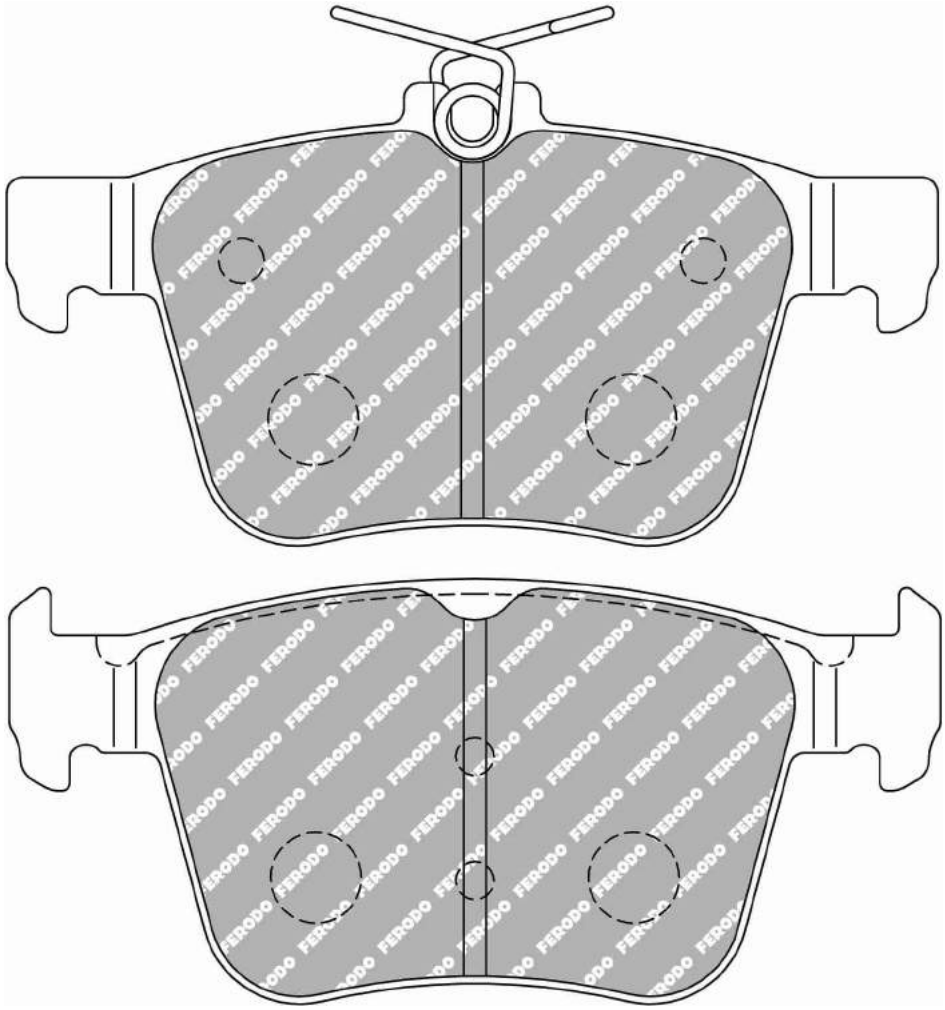

MATERIAL AVAILABILITY						
H	C	R	W	WB	Z	ZB
✔			✔			

CROSS REFERENCE	
BREMBO	P85124
MINTEX	MDB3100
MINTEX	MDB3101
PAGID	1976
PAGID	1977
WVA	25009 - 25011

✔ Available
✖ Out of Range
In Introduction
Exhausting
Make to order

FERODO RACING

Updated on November 2020

FCP4711

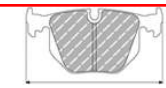
189.8mm = 7.472"

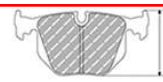
85.0mm = 3.346"


15.8mm = 0.622"


65.0mm = 2.559"

AUDI Front, FORD Front, MERCEDES Front

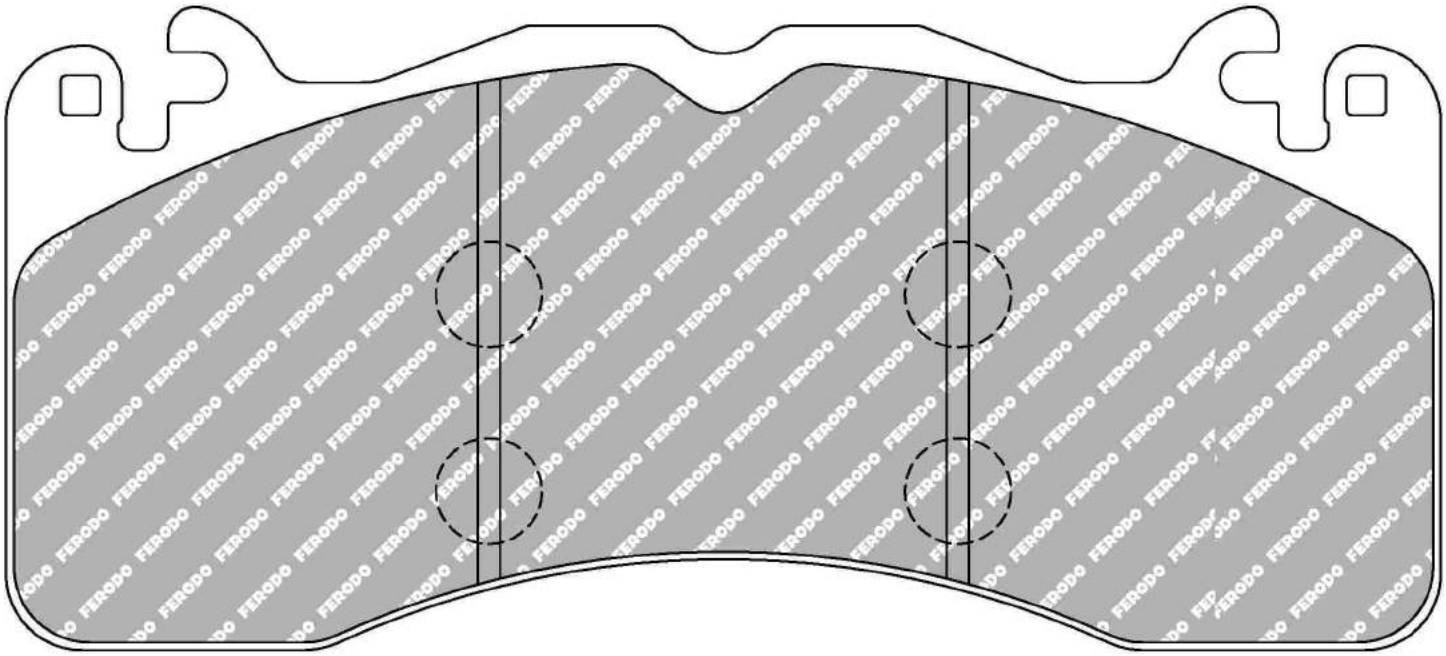

MATERIAL AVAILABILITY						
H	C	R	W	WB	Z	ZB
✔			✉		✉	

FERODO RACING

Updated on November 2020

Available
Out of Range
In Introduction
Exhausting
Make to order

FCP4712


209.8mm = 8.260"

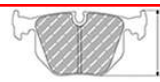
86.8mm = 3.417"


20.4mm = 0.803"


77.0mm = 3.031"

BMW Front

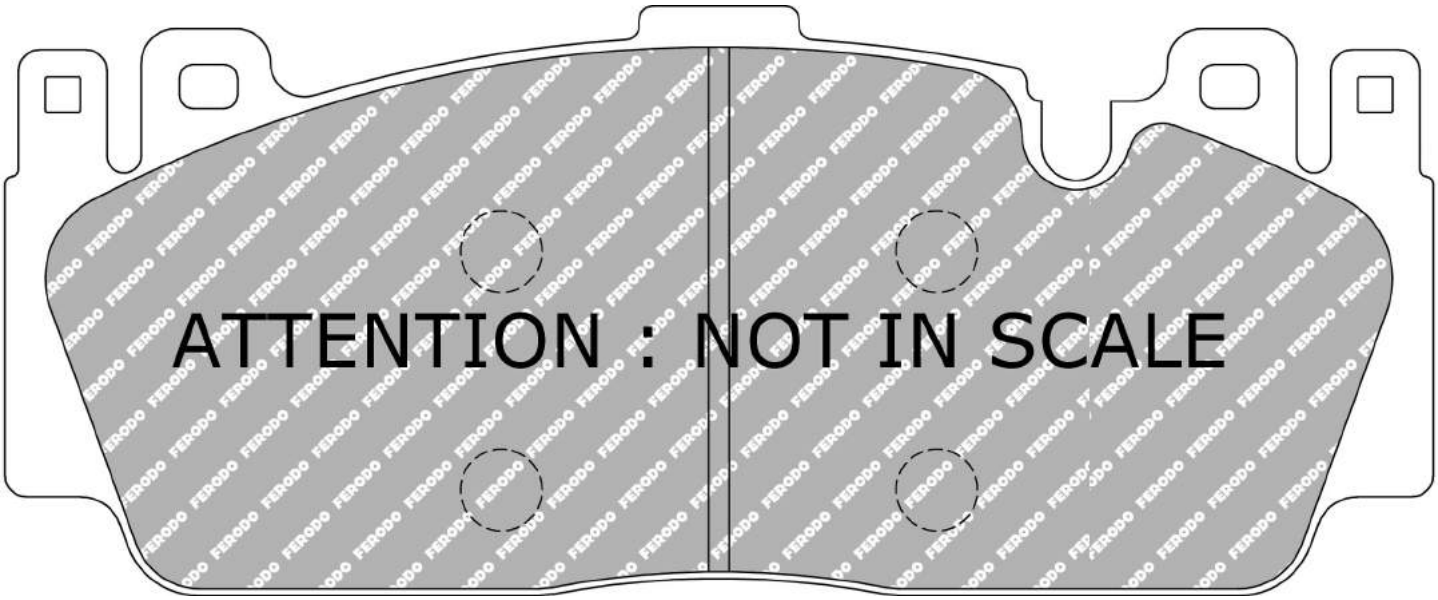

Back-plate design does not allow wear indicator fitment

MATERIAL AVAILABILITY						
H	C	R	W	WB	Z	ZB
✔			✔		✔	

CROSS REFERENCE	
OE BMW	34112284369
PAGID	4934

✔ Available
✖ Out of Range
In Introduction
Exhausting
Make to order

FERODO RACING

Updated on November 2020

FCP4713

WVA No: 24554, 25691


187.7mm = 7.390"

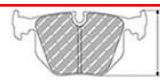
70.6mm = 2.780"


16mm = 0.630"


59mm = 2.323"

PORSCHE Rear

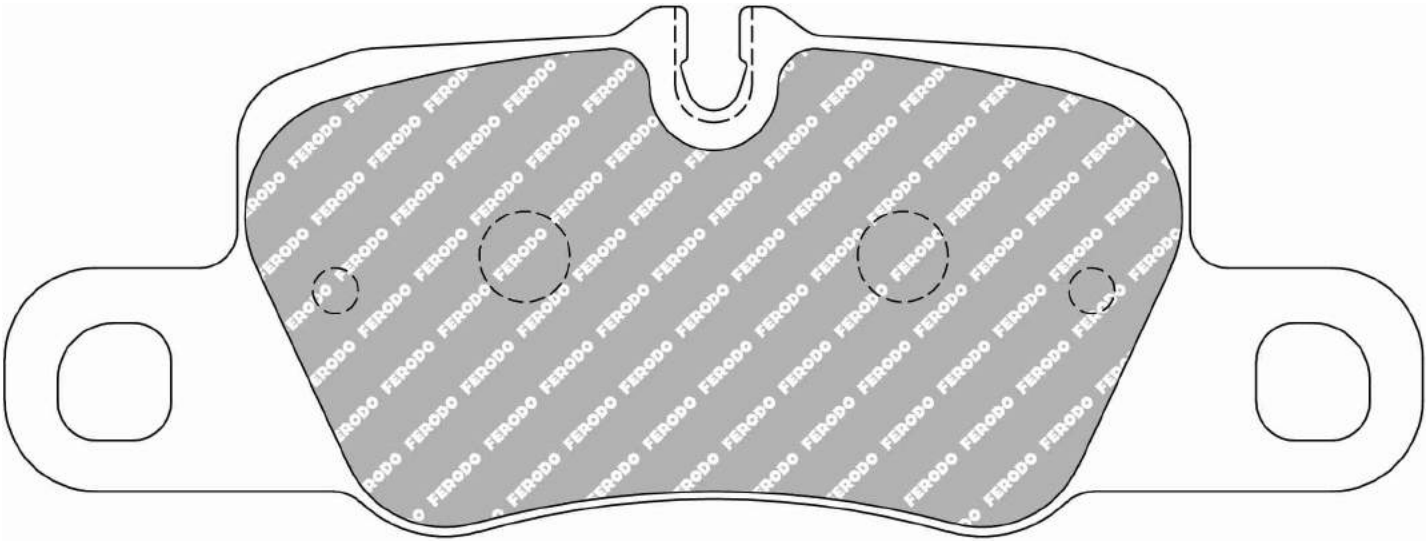

MATERIAL AVAILABILITY						
H	C	R	W	WB	Z	ZB
✔			✔			

CROSS REFERENCE	
MINTEX	MDB2975
OE PORSCHE	97035194905
OE PORSCHE	97035294902
OE PORSCHE	97035294904
OE PORSCHE	97035294905
OE PORSCHE	99135294803
PAGID	4909
PAGID	T1785
PAGID	T2309
WVA	24554, 25691

FERODO RACING

Updated on November 2020

Available
Out of Range
In Introduction
Exhausting
Make to order

FCP4805


199.7mm = 7.862"

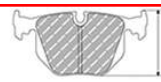
74.6mm = 2.937"


18.5mm = 0.728"


59.8mm = 2.354"

FMSI No: D1389

PORSCHE Front

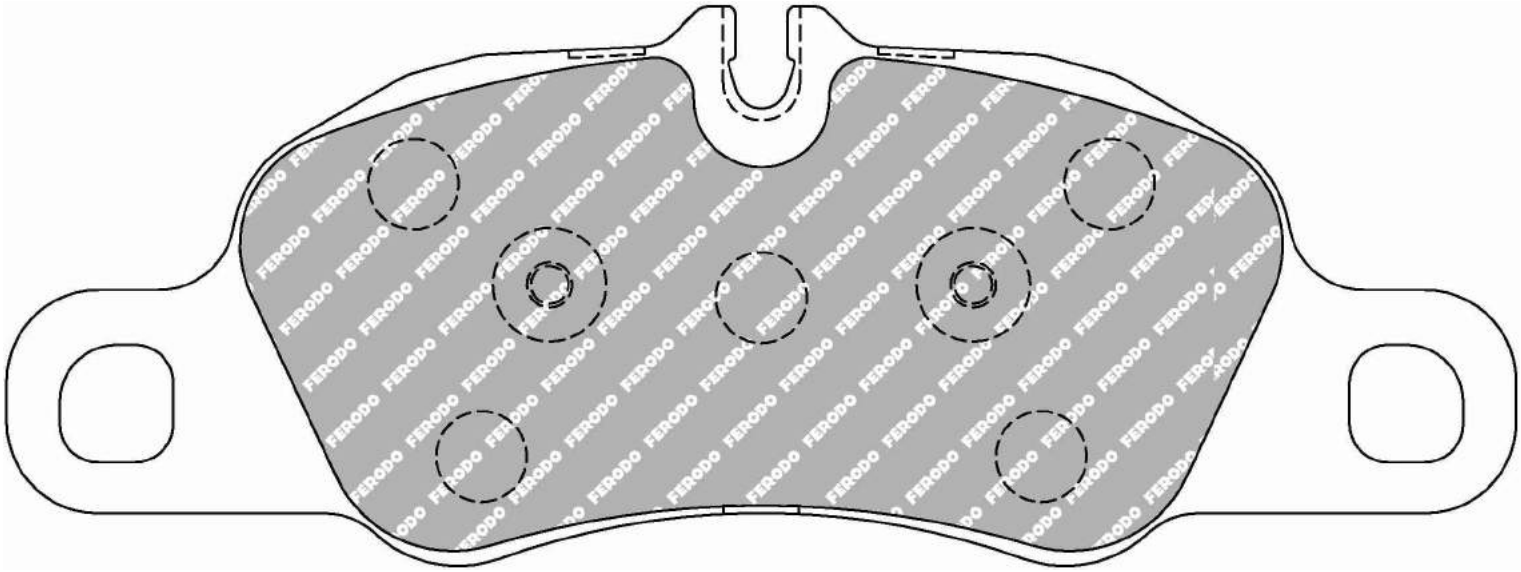

MATERIAL AVAILABILITY						
H	C	R	W	WB	Z	ZB
✔			✉		✉	

CROSS REFERENCE	
FMSI	D1389
PAGID	8074
PAGID	T1753
Raybestos	DR1389

✔ Available
✖ Out of Range
In Introduction
Exhausting
✉ Make to order

FERODO RACING

Updated on November 2020

FCP4806

WVA No: 25219


154.6mm = 6.087"

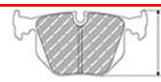
92.6mm = 3.646"


16.7mm = 0.657"


68.7mm = 2.705"

MERCEDES Front

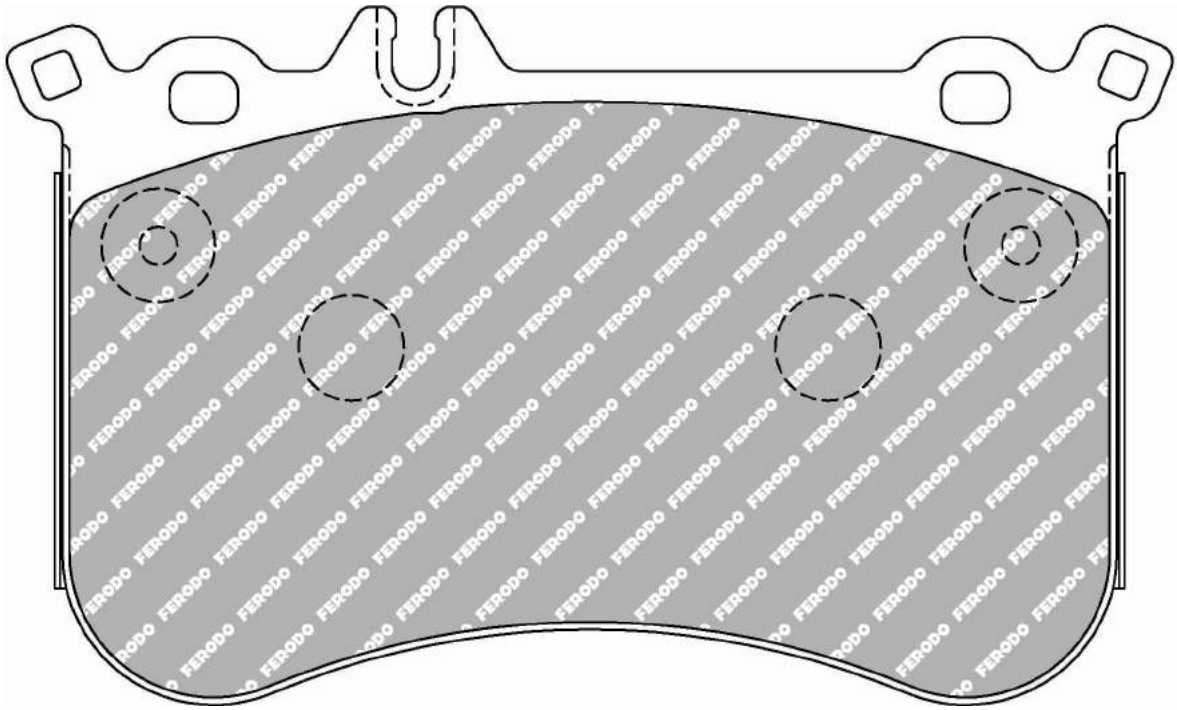

MATERIAL AVAILABILITY						
H	C	R	W	WB	Z	ZB
✔		✉				

CROSS REFERENCE	
PAGID	8188
PAGID	T2102
PAGID	T2419
WVA	25219

FERODO RACING

Updated on November 2020

✔ Available
✖ Out of Range
In Introduction
Exhausting
Make to order

FCP4816



155.3mm = 6.114"
155.3mm = 6.114"

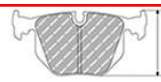

56.6mm = 2.228"
55.6mm = 2.189"



16.4mm = 0.646"
16.4mm = 0.646"



49mm = 1.929"
49mm = 1.929"

FORD Front

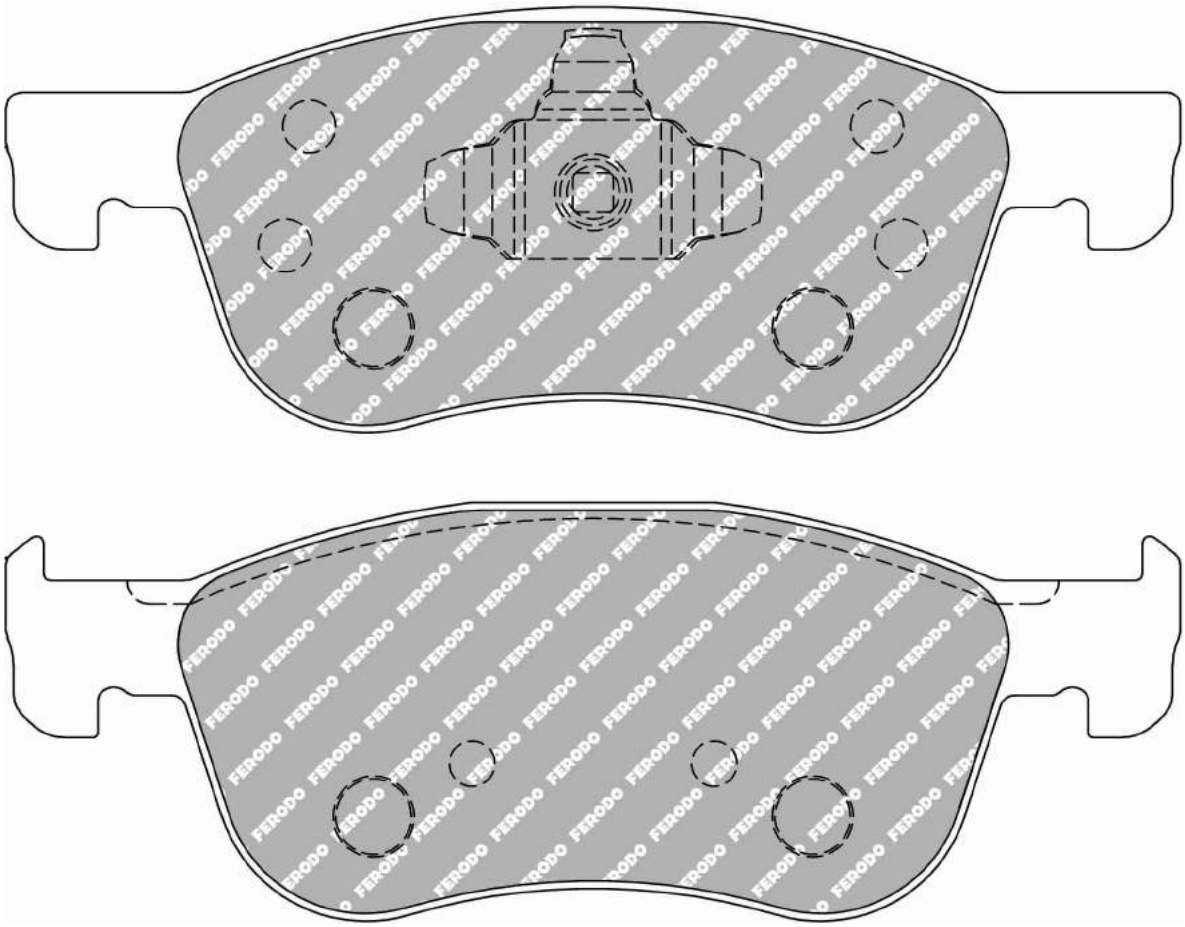

MATERIAL AVAILABILITY						
H	C	R	W	WB	Z	ZB
✔			✉			

✔ Available
✖ Out of Range
In Introduction
⚠ Exhausting
✉ Make to order

FERODO RACING

Updated on November 2020

FCP4821


124.8mm = 4.913"

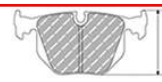
70.7mm = 2.783"


13.8mm = 0.543"


52.1mm = 2.051"

ABARTH Front, FIAT Front, MAZDA Front

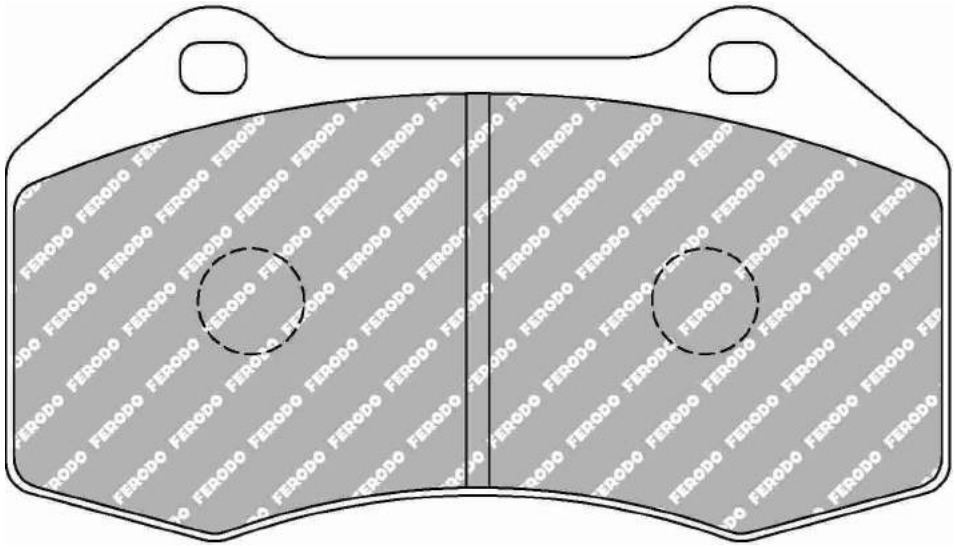

ALSO AVAILABLE		
SHAPE	TH. MM	NOTES
FCP1667	15.5	

MATERIAL AVAILABILITY						
H	C	R	W	WB	Z	ZB
✔						

FERODO RACING

Updated on November 2020

✔ Available
✖ Out of Range
In Introduction
Exhausting
Make to order

FCP4830

WVA No: 22569-22570-22571



137.8mm = 5.425" 77.9mm = 3.067" 15.1mm = 0.594" 60.0mm = 2.362"

FORD Front

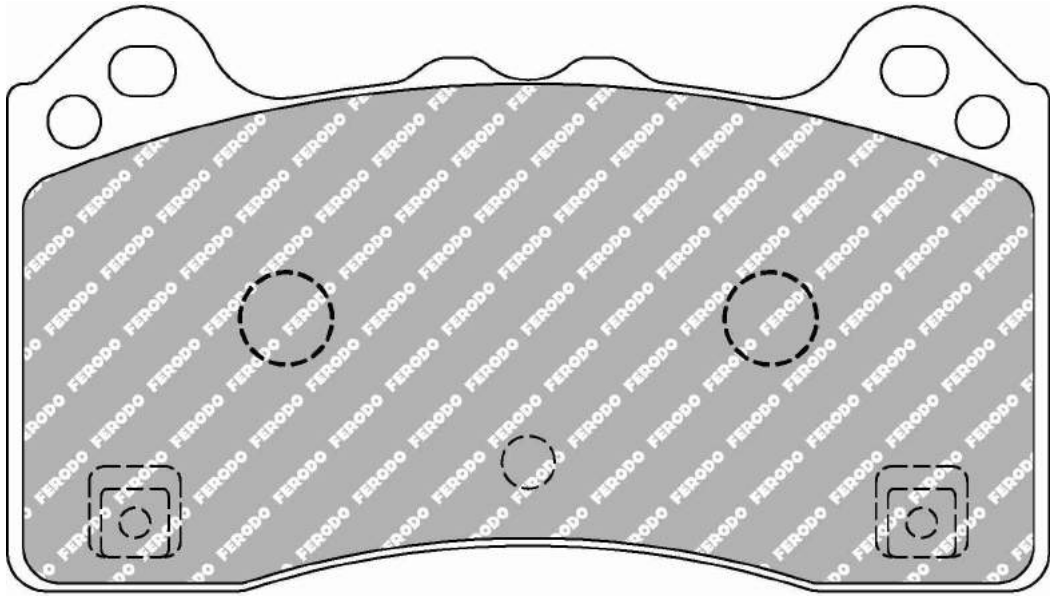

MATERIAL AVAILABILITY						
H	C	R	W	WB	Z	ZB
✔			✔		✉	

CROSS REFERENCE	
OE FORD	2003984
WVA	22569-22570-22571

✔ Available ✖ Out of Range In Introduction ⚠ Exhausting ✉ Make to order

FERODO RACING

Updated on November 2020

FCP4835


189.2mm = 7.449"

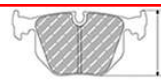
92.7mm = 3.650"


16.3mm = 0.642"


77.5mm = 3.051"

FORD Front

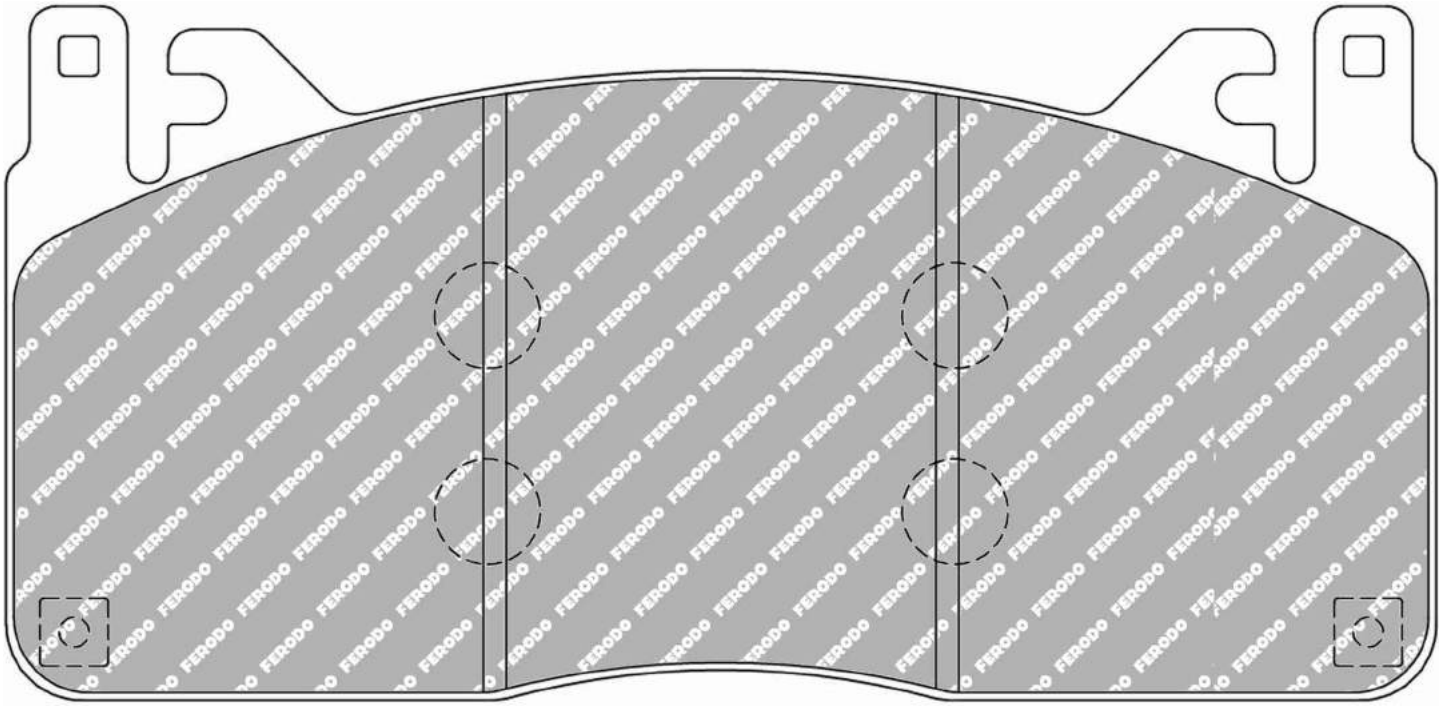

MATERIAL AVAILABILITY						
H	C	R	W	WB	Z	ZB
✔					✔	

FERODO RACING

Updated on November 2020

Available
Out of Range
In Introduction
Exhausting
Make to order

FCP4872

WVA No: 22344


114.5mm = 4.508"

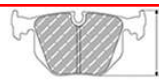
91.2mm = 3.591"


15mm = 0.591"


71.3mm = 2.807"

MINI Front

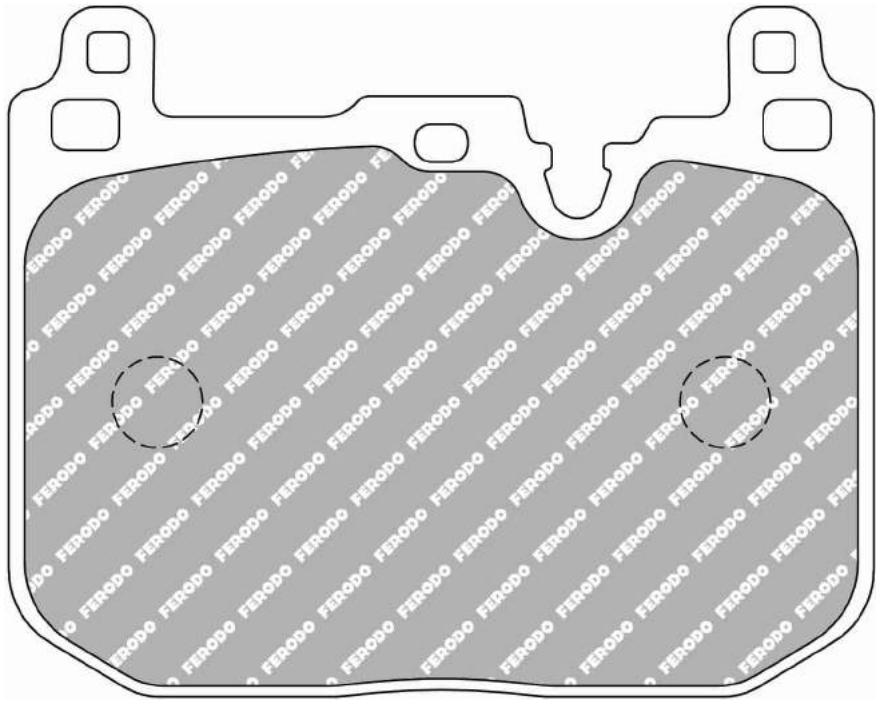

Wear indicator lead cannot be fitted; Replacement piston rubber caps not provided

ALSO AVAILABLE		
SHAPE	TH. MM	NOTES
FCP4611	18.1	

CROSS REFERENCE	
OE BMW	34106860020
WVA	22344

MATERIAL AVAILABILITY						
H	C	R	W	WB	Z	ZB
✔			✉		✉	

✔ Available
✖ Out of Range
In Introduction
Exhausting
Make to order

FERODO RACING

Updated on November 2020

FCP4873

WVA No: 22271


122.65mm = 4.829"

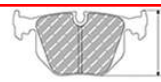
53.9mm = 2.122"


14.6mm = 0.575"


46.5mm = 1.831"

MAZDA Front

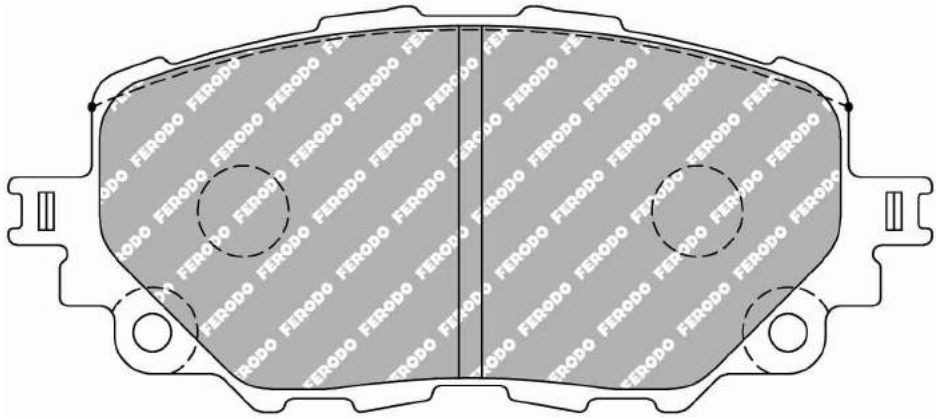

MATERIAL AVAILABILITY						
H	C	R	W	WB	Z	ZB
✔						

CROSS REFERENCE	
WVA	22271

FCP4955

WVA No: 25003


198.7mm = 7.823"

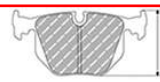
75.8mm = 2.984"


17.3mm = 0.681"

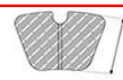
56.5mm = 2.224"

PORSCHE Front

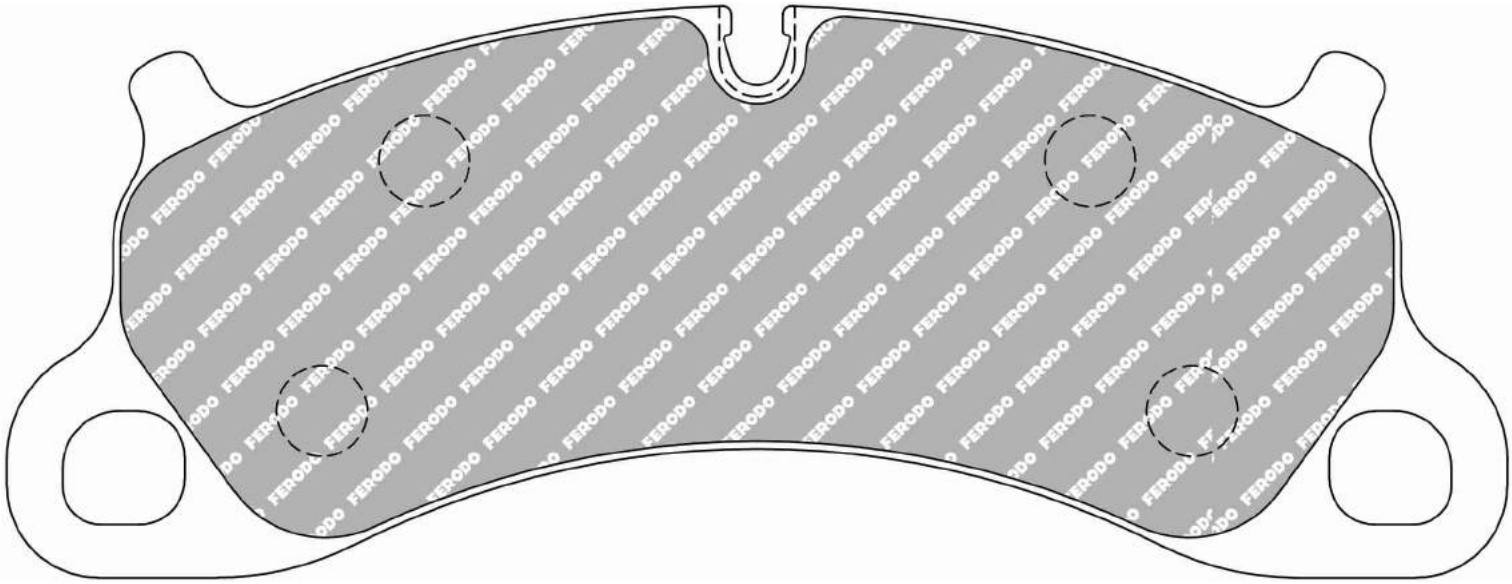

The H (DS2500) version is capable of taking an electronic wear indicator plug. The W (DS1.11) version cannot take a plug

MATERIAL AVAILABILITY						
H	C	R	W	WB	Z	ZB
✔			✔			

CROSS REFERENCE	
MINTEX	MDB3243
OE PORSCHE	99135194902
PAGID	4922
PAGID	T2150
WVA	25003

FERODO RACING

Updated on November 2020

✔ Available
✖ Out of Range
In Introduction
Exhausting
Make to order

FCP4972


113.8mm = 4.480"

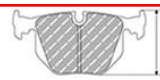
59mm = 2.323"


14.5mm = 0.571"


46.1mm = 1.815"

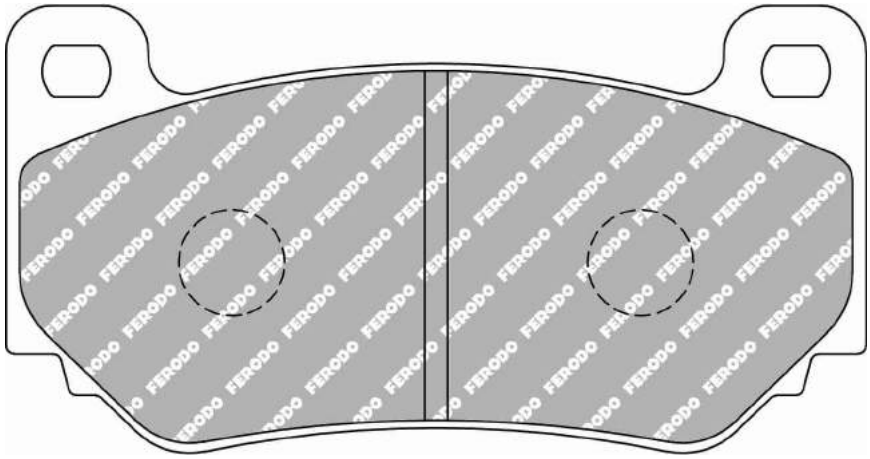

ALSO AVAILABLE		
SHAPE	TH. MM	NOTES
FRP3085	16.2	

CROSS REFERENCE	
PAGID	8076

MATERIAL AVAILABILITY						
H	C	R	W	WB	Z	ZB
✔						

✔ Available
✖ Out of Range
In Introduction
Exhausting
Make to order

FERODO RACING

Updated on November 2020

FCP5030


189.9mm = 7.476"

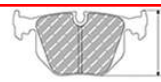
96.6mm = 3.803"


16.1mm = 0.634"


81mm = 3.189"

FMSI No: D1395

CHEVROLET Front

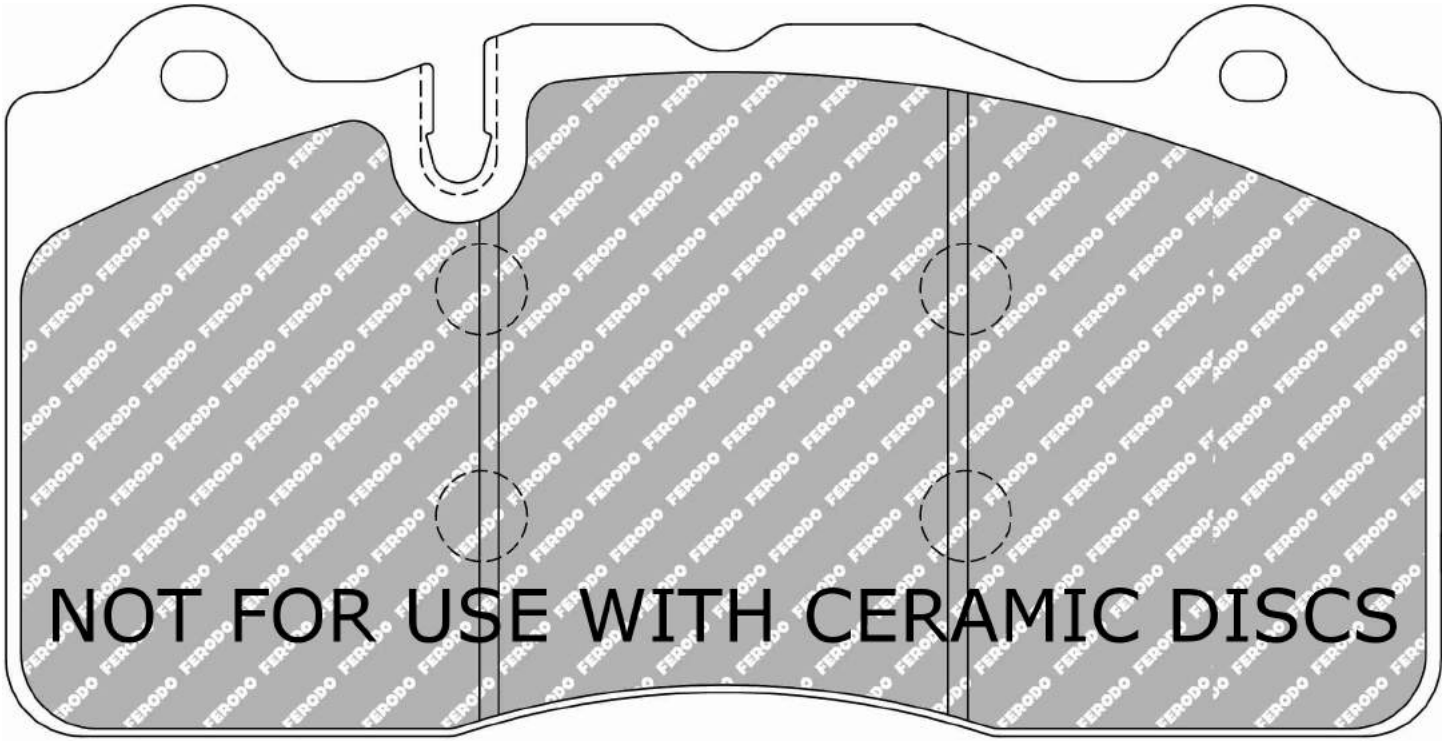

Not for use with ceramic discs

MATERIAL AVAILABILITY						
H	C	R	W	WB	Z	ZB
✔			✔			

CROSS REFERENCE	
FMSI	D1395
HAWK	HB631

FERODO RACING

Updated on November 2020

✔ Available
✖ Out of Range
In Introduction
Exhausting
Make to order

FCP5037

WVA No: 22904, 22905, 22906


121.6mm = 4.787"

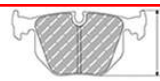
55.5mm = 2.185"


17mm = 0.669"


48.1mm = 1.894"

KIA Front

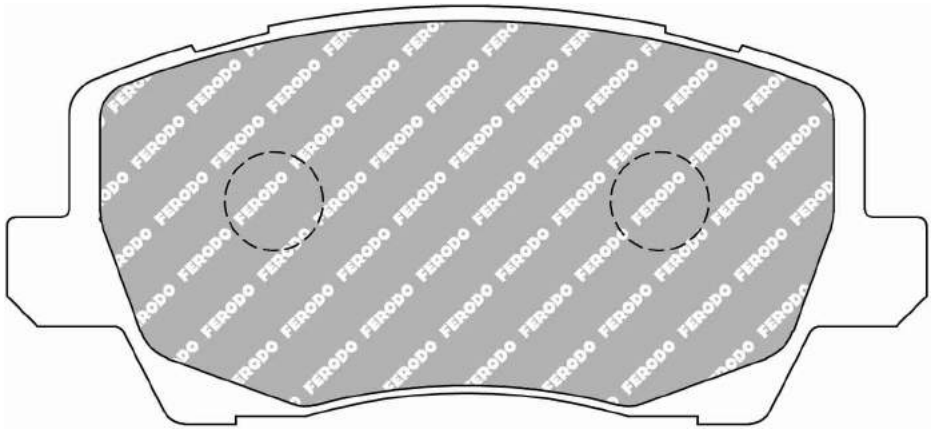

MATERIAL AVAILABILITY						
H	C	R	W	WB	Z	ZB
✔		✉				

CROSS REFERENCE	
OE - KIA	58101G6A30
OE - KIA	58101G6A40
WVA	22904, 22905, 22906

FCP5055

WVA No: 22425


126.42mm = 4.977"

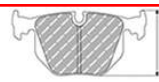
95.2mm = 3.748"


20.1mm = 0.791"


75.2mm = 2.961"

BMW Front, TOYOTA Front

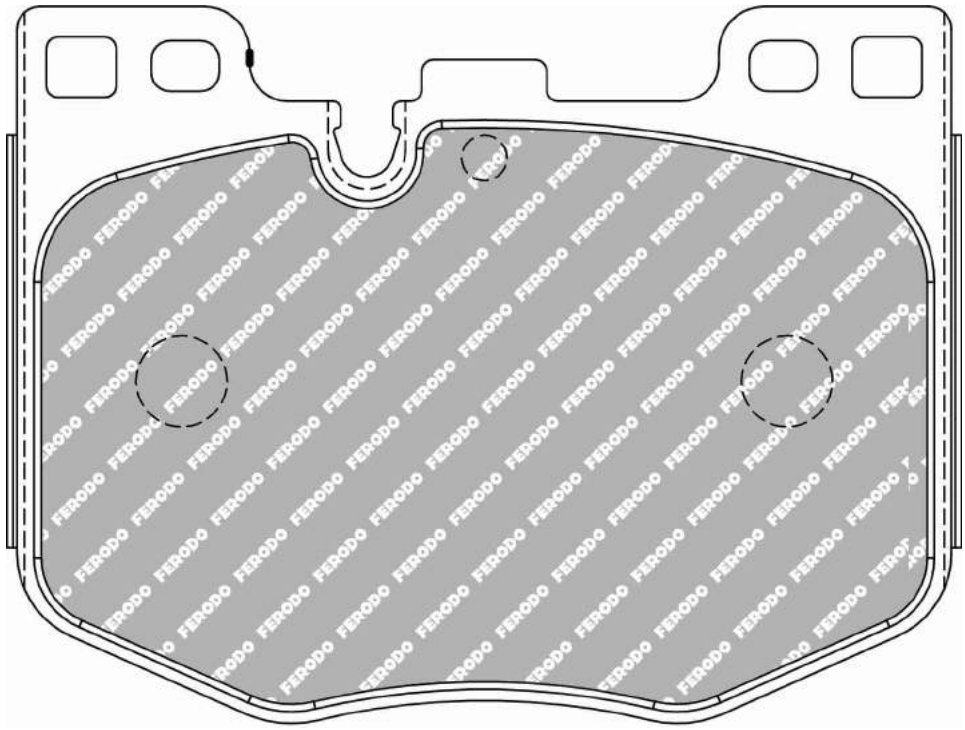

MATERIAL AVAILABILITY						
H	C	R	W	WB	Z	ZB
✔						

CROSS REFERENCE	
MINTEX	MDB3869
OE BMW	34116872750
OE BMW	34116874430
OE BMW	34116880734
OE BMW	34116880735
OE BMW	34116888457
OE BMW	34116888458
OE BMW	34116889570
OE TOYOTA	04465-WAA01
WVA	22425

FERODO RACING

Updated on November 2020

Available
Out of Range
In Introduction
Exhausting
Make to order

FCP5086

WVA No: 22429, 22430



122.6mm = 4.827"
122.6mm = 4.827"

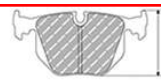

53.2mm = 2.094"
48.3mm = 1.902"



15mm = 0.591"
15mm = 0.591"



43.3mm = 1.705"
43.3mm = 1.705"

HONDA Rear

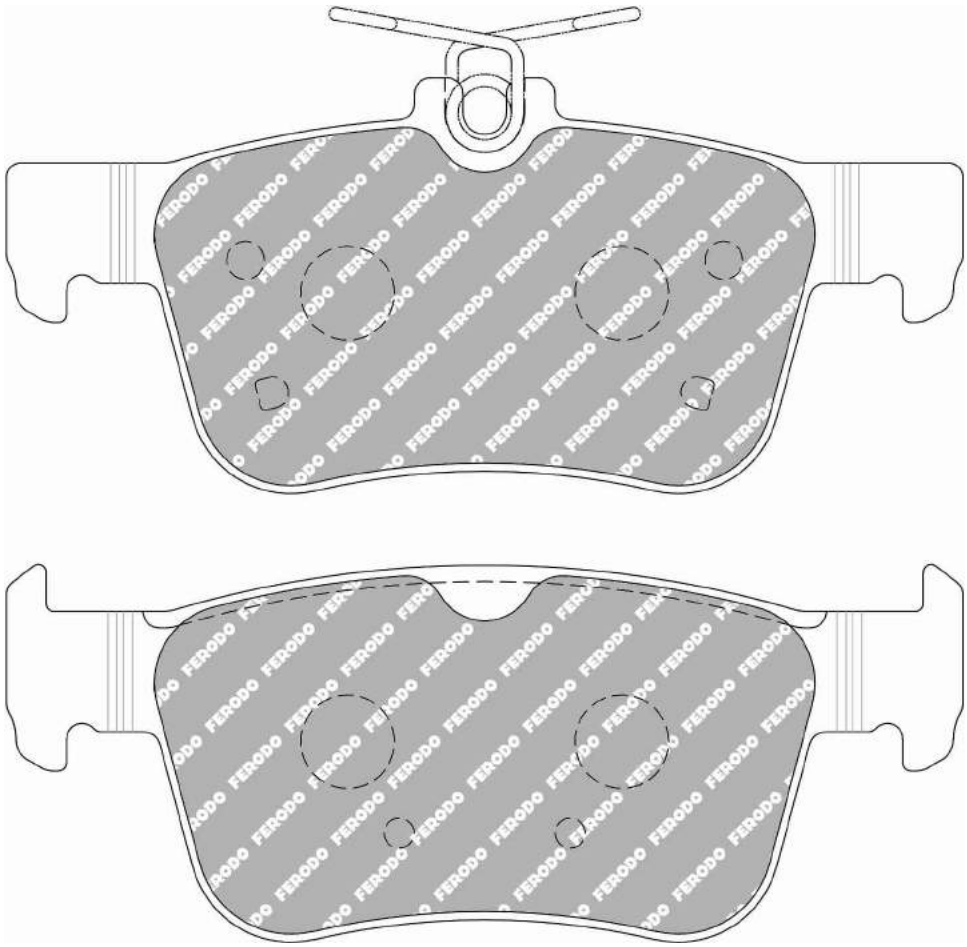

MATERIAL AVAILABILITY						
H	C	R	W	WB	Z	ZB
✔			✔			

CROSS REFERENCE	
BREMBO	P 28 089
OE HONDA	43022TBAA02
OE HONDA	43022TGHA01
OE HONDA	43022TGNG02
PAGID	T2585
WVA	22429, 22430

✔ Available
✘ Out of Range
In Introduction
Exhausting
Make to order

FERODO RACING

Updated on November 2020

FCP5099


140.7mm = 5.539"

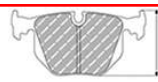
61mm = 2.402"


20.1mm = 0.791"


57.5mm = 2.264"

HYUNDAI Front

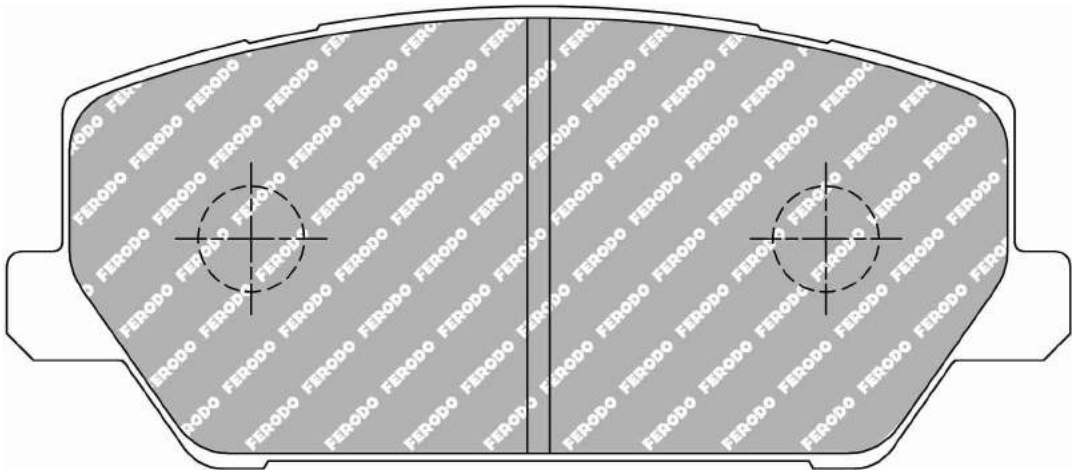

In introduction

MATERIAL AVAILABILITY						
H	C	R	W	WB	Z	ZB
✔						

CROSS REFERENCE	
OE HYUNDAI	58101-G4A00
OE HYUNDAI	58101-G4A10

FERODO RACING

Updated on November 2020

✔ Available
✖ Out of Range
In Introduction
Exhausting
Make to order

FCP5108

WVA No: 25163, 25164



146.2mm = 5.756"
146.2mm = 5.756"

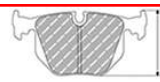

68.5mm = 2.697"
58.9mm = 2.319"



18.8mm = 0.740"
18.8mm = 0.740"



47.8mm = 1.882"
47.5mm = 1.870"

MERCEDES Rear

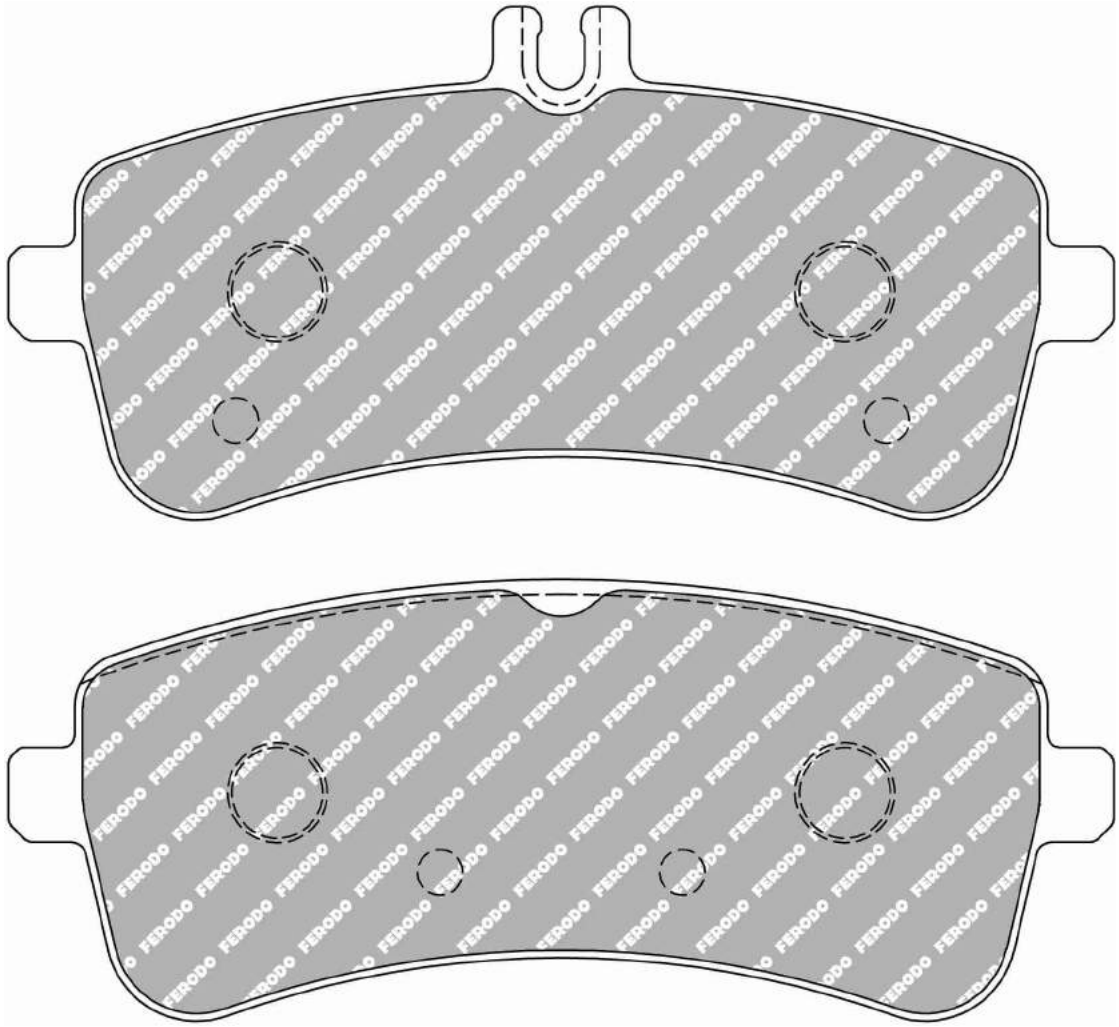

MATERIAL AVAILABILITY						
H	C	R	W	WB	Z	ZB

CROSS REFERENCE	
PAGID	T2424
WVA	25163, 25164

Available
Out of Range
In Introduction
Exhausting
Make to order

FERODO RACING

Updated on November 2020

FCP5130


123.25mm = 4.852"
123.25mm = 4.852"

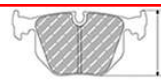
46.8mm = 1.843"
42.8mm = 1.685"


14.2mm = 0.559"
14.2mm = 0.559"


34.85mm = 1.372"
34.85mm = 1.372"

FORD Rear

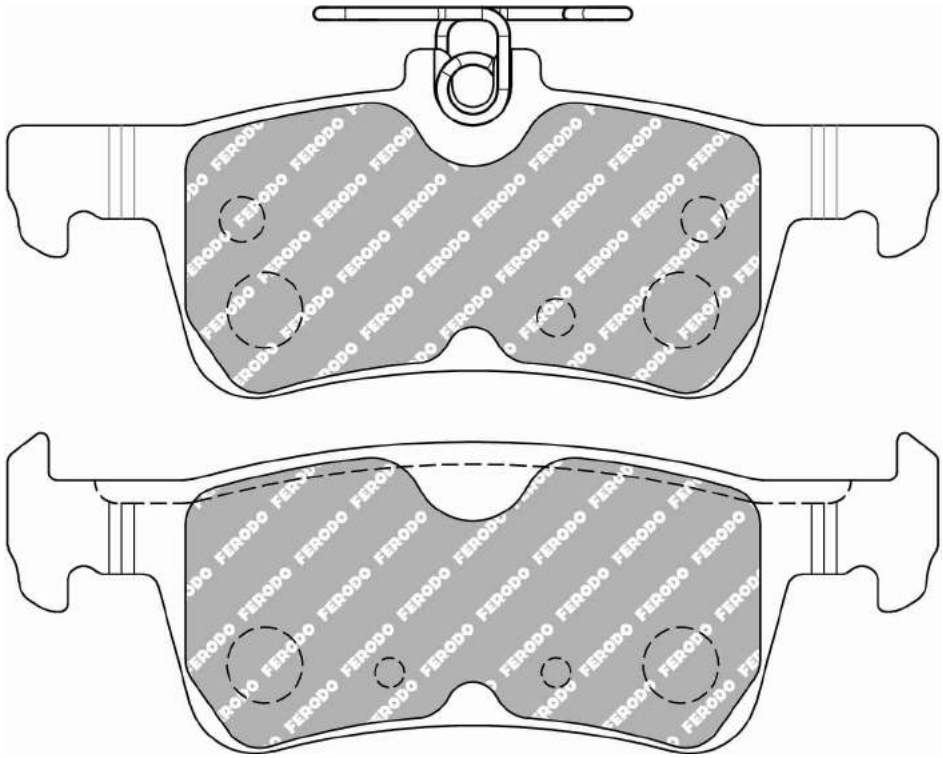

MATERIAL AVAILABILITY						
H	C	R	W	WB	Z	ZB

FERODO RACING

Updated on November 2020

Available
Out of Range
In Introduction
Exhausting
Make to order

FRP101


100.0mm = 3.937"

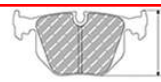
53.0mm = 2.087"


16.0mm = 0.630"


49.3mm = 1.941"

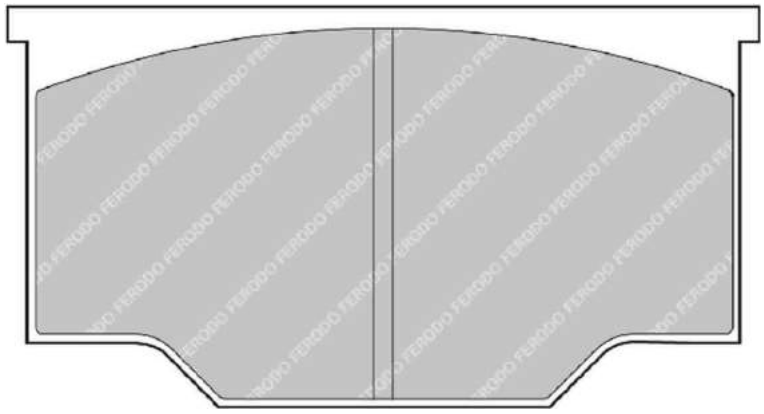

MATERIAL AVAILABILITY						
H	C	R	W	WB	Z	ZB
		✔			✉	

CROSS REFERENCE	
ALCON	3435
PAGID	1192
PFC	7710

FRP201


113.5mm = 4.469"


52.0mm = 2.047"


15.7mm = 0.618"


48.0mm = 1.890"

CATERHAM Front

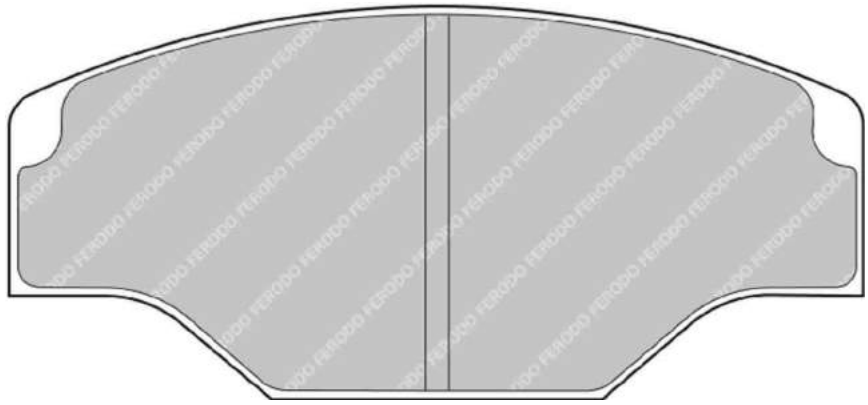

MATERIAL AVAILABILITY						
H	C	R	W	WB	Z	ZB
✔	✉	✔	✔		✔	

CROSS REFERENCE	
ALCON	PNF0084X264.4
ALCON	PNF4463X554
ALCON	PNF4463X554.4
ALCON	PNF4463X581.4
AP RACING	CP2340D51
PAGID	1265

FRP202


81.9mm = 3.224"

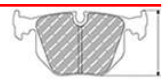
58.0mm = 2.283"


15.8mm = 0.622"


51.0mm = 2.008"

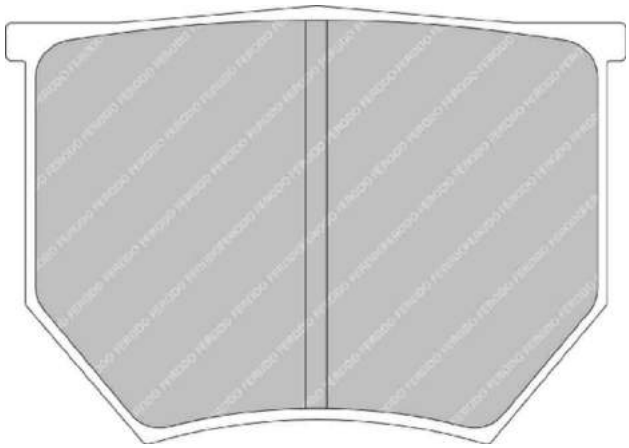

MATERIAL AVAILABILITY						
H	C	R	W	WB	Z	ZB
✔	✔	✔				

CROSS REFERENCE	
AP RACING	CP2373
AP RACING	CP2382
AP RACING	CP2383
AP RACING	CP2384
PAGID	8040

FRP203


127.0mm = 5.000"

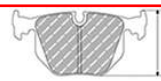
56.0mm = 2.205"


16.5mm = 0.650"


50.3mm = 1.980"

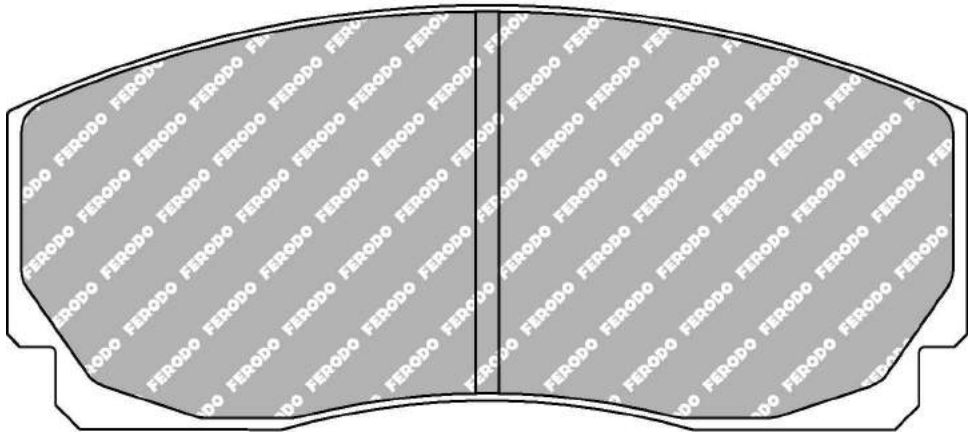

MATERIAL AVAILABILITY						
H	C	R	W	WB	Z	ZB
✔		✔			✔	

CROSS REFERENCE	
AP RACING	CP2270D50
PAGID	1269

FERODO RACING

Updated on November 2020

✔ Available
✖ Out of Range
In Introduction
Exhausting
Make to order

FRP212


132.4mm = 5.213"

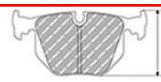
56.0mm = 2.205"


20.3mm = 0.799"


50.3mm = 1.980"

CHEVROLET Rear, OPEL Front

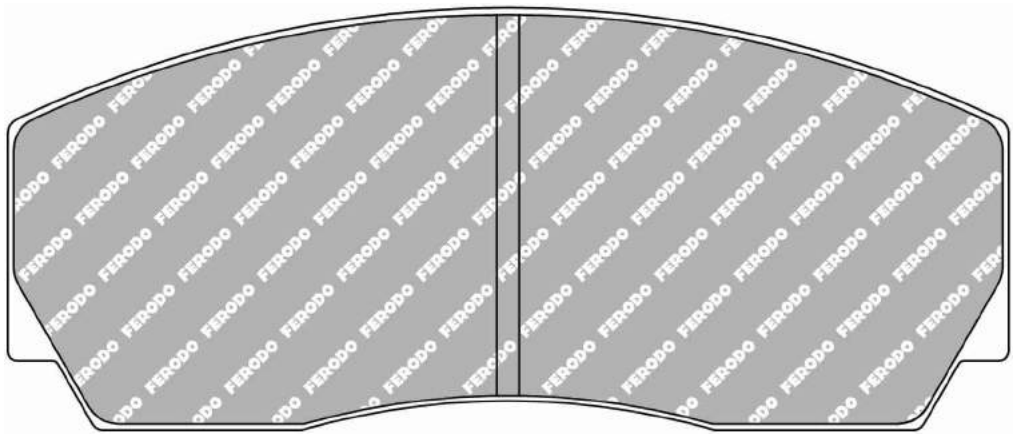

ALSO AVAILABLE		
SHAPE	TH. MM	NOTES
FRP216	17	

MATERIAL AVAILABILITY						
H	C	R	W	WB	Z	ZB
✔		✔	✔		✔	

CROSS REFERENCE	
AP RACING	CP2279D50
BREMBO	B5220
PAGID	1270
PFC	7767
PFC	7767.XX.20

✔ Available
✖ Out of Range
In Introduction
Exhausting
Make to order

FERODO RACING

Updated on November 2020

FRP216


132.4mm = 5.213"

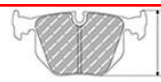
56.0mm = 2.205"


17.0mm = 0.669"


50.3mm = 1.980"

AC Front, ASTON MARTIN Front, RENAULT Front, SUBARU Front

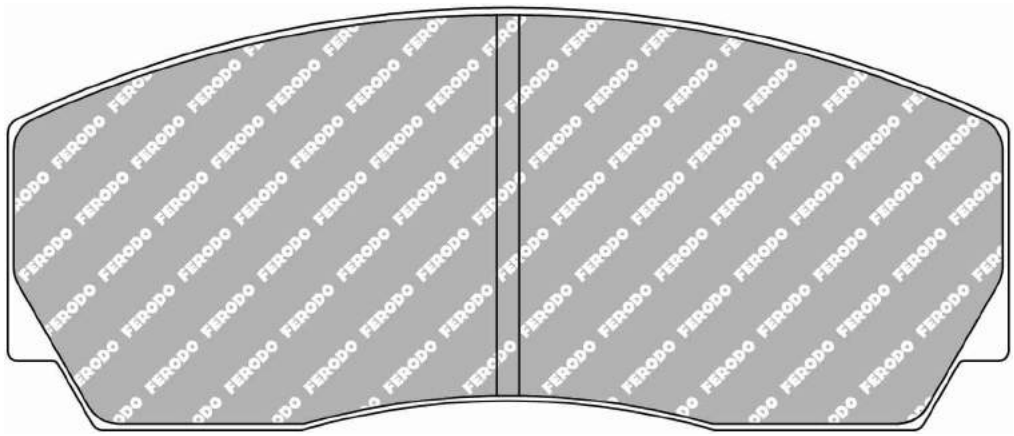

ALSO AVAILABLE		
SHAPE	TH. MM	NOTES
FRP212	20.3	

MATERIAL AVAILABILITY						
H	C	R	W	WB	Z	ZB
✓	✉	✓	✓		✓	

CROSS REFERENCE	
ALCON	PNF0084X245.4
ALCON	PNF0084X331
ALCON	PNF0084X331.4
AP RACING	CP3215D50
BREMBO	7767.XX.17
BREMBO	B5217
EBC	DP4002
HAWK	HB110
MINTEX	1289
PAGID	1361
PFC	7767
Raybestos	DR767
Wilwood	8517

FERODO RACING

Updated on November 2020

✓ Available
✗ Out of Range
In Introduction
Exhausting
Make to order

FRP217


130.2mm = 5.126"

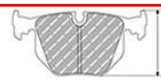
76.0mm = 2.992"


25.0mm = 0.984"


54.0mm = 2.126"

ASTON MARTIN Front

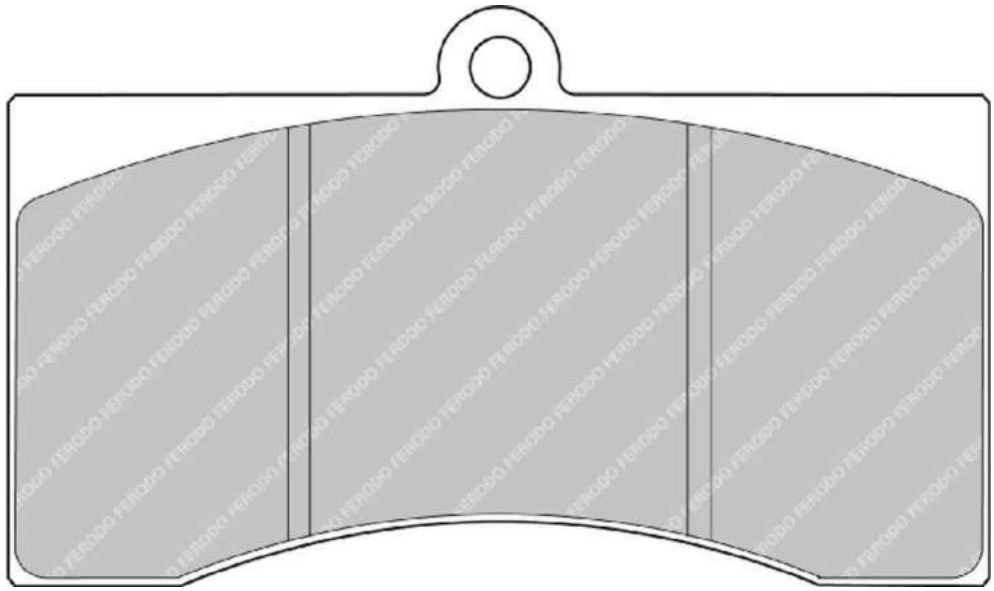

MATERIAL AVAILABILITY						
H	C	R	W	WB	Z	ZB
		✓	✉		✓	

CROSS REFERENCE	
AP RACING	CP3714D54
PAGID	1267
PFC	7714

FRP218


113.6mm = 4.472"

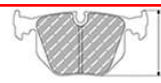
47.0mm = 1.850"


16.0mm = 0.630"


40.6mm = 1.598"

FMSI No: DR84

CITROEN Front

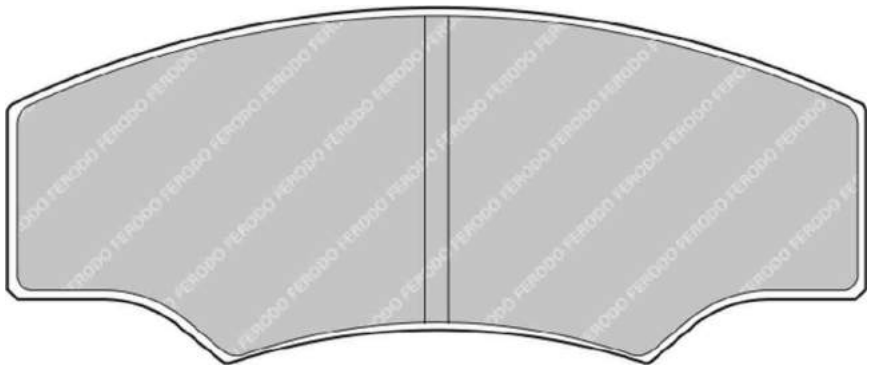

MATERIAL AVAILABILITY						
H	C	R	W	WB	Z	ZB
✓	✓	✓	✓			

CROSS REFERENCE	
ALCON	PNF4463X551
ALCON	PNF4463X551.4
AP RACING	CP2340D43
FMSI	DR84
HAWK	HB107
PAGID	1749
PFC	7740
Raybestos	DR805
Wilwood	5616

FRP219


113.6mm = 4.472"

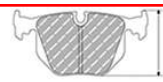
52.4mm = 2.063"


16.0mm = 0.630"


44.1mm = 1.736"

PEUGEOT Front, SUBARU Rear

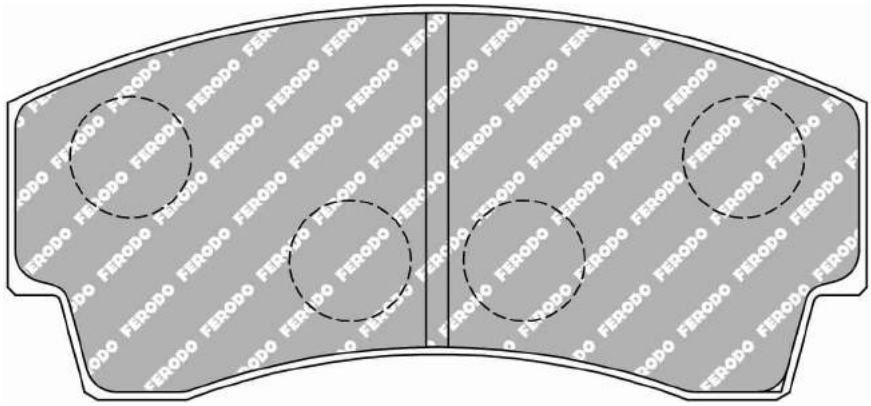

MATERIAL AVAILABILITY						
H	C	R	W	WB	Z	ZB
✔	✔	✔	✔		✔	

CROSS REFERENCE	
ALCON	PNF4463X529
ALCON	PNF4463X529.4
ALCON	PNF4463X572
AP RACING	CP3345D44
HAWK	HB192
PAGID	2127
PFC	7745
Raybestos	DR804
SBS	3059
Wilwood	8716

FERODO RACING

Updated on November 2020

✔ Available
✖ Out of Range
In Introduction
Exhausting
Make to order

FRP302


131.8mm = 5.189"

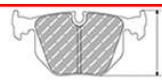
62.2mm = 2.449"


20.0mm = 0.787"


49.0mm = 1.929"

ASTON MARTIN Rear, CITROEN Front, PORSCHE Rear

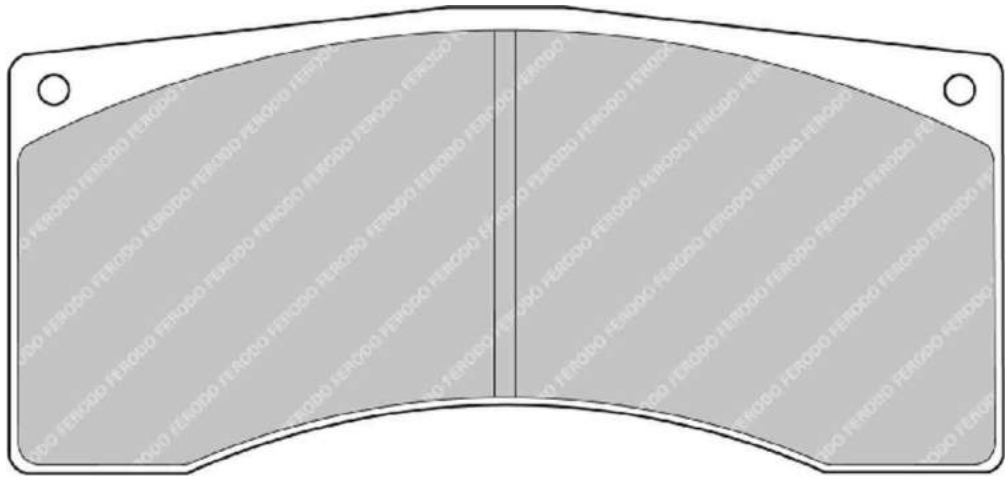

ALSO AVAILABLE		
SHAPE	TH. MM	NOTES
FRP1077	16	
FRP1078	25	
FRP3007	18	
FRP3156	26.5	

MATERIAL AVAILABILITY						
H	C	R	W	WB	Z	ZB
✓	✗	✓	✉		✗	✓

CROSS REFERENCE	
ALCON	PNF4441X728
ALCON	PNF4441X728.4
ALCON	PNF4441X754
ALCON	PNF4441X754.4
ALCON	PNF4441X757.4
BREMBO	07.5139.6
BREMBO	07.5139.65
BREMBO	07.5139.69
HAWK	HB208
PAGID	1607
PFC	7700.XX.20
Raybestos	DR2000 0.78
Wilwood	9220

FRP308


99.8mm = 3.929"

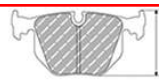
46.0mm = 1.811"


20.0mm = 0.787"


43.6mm = 1.717"

MITSUBISHI Rear

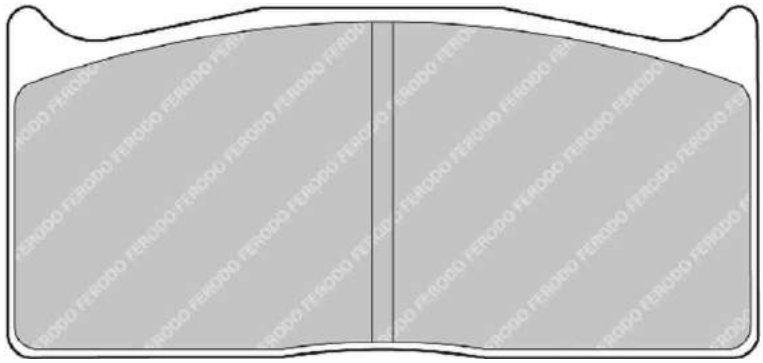

ALSO AVAILABLE		
SHAPE	TH. MM	NOTES
FRP1079	16	

MATERIAL AVAILABILITY						
H	C	R	W	WB	Z	ZB
✔	✉	✔	✔		✔	

CROSS REFERENCE	
BREMBO	07.5064.27
BREMBO	07.5064.7
BREMBO	07.5064.72
BREMBO	07.5064.73
BREMBO	B0920
PAGID	1283
PFC	7735.XX.20

FERODO RACING

Updated on November 2020

✔ Available
✖ Out of Range
In Introduction
⚠ Exhausting
✉ Make to order

FRP501


133.0mm = 5.236"

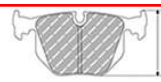
71.0mm = 2.795"


20.0mm = 0.787"


43.0mm = 1.693"

FMSI No: DR2

OPEL Front

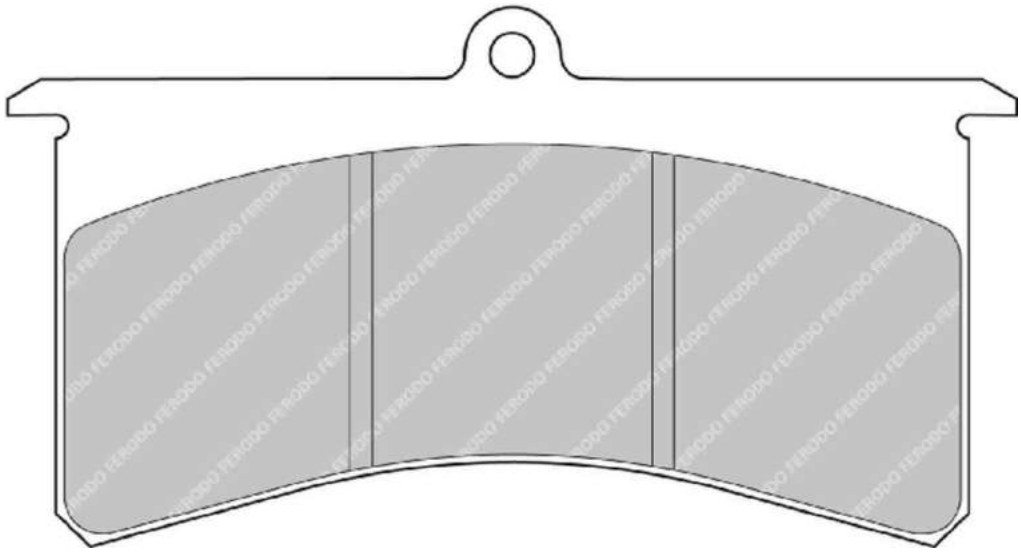

Same as FRP3097 but NON-fixed bridge caliper

ALSO AVAILABLE		
SHAPE	**TH. MM**	**NOTES**
FRP3097	**none**	**Fixed Bridge Caliper**

MATERIAL AVAILABILITY						
H	**C**	**R**	**W**	**WB**	**Z**	**ZB**
✔		✔	✔		✉	

CROSS REFERENCE	
AP RACING	CP4751D43
FMSI	DR2
HAWK	HB101
MINTEX	1795
PAGID	2555
PFC	7751
Raybestos	DR700
Wilwood	7320

FRP502


100.7mm = 3.965"

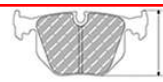
60.0mm = 2.362"


12.5mm = 0.492"


46.4mm = 1.827"

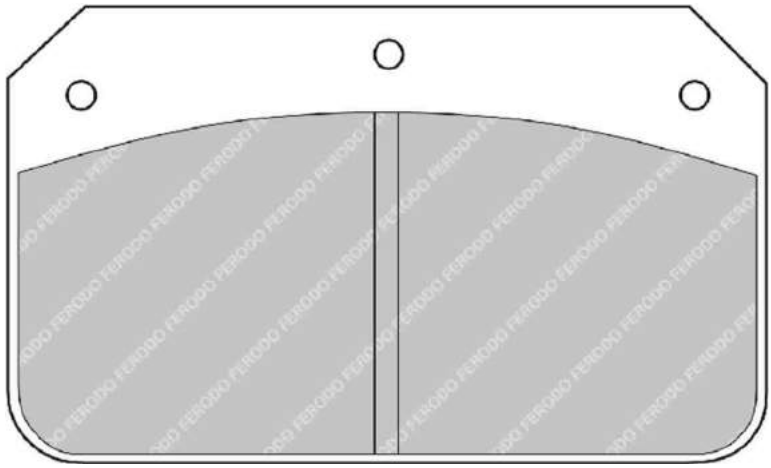

MATERIAL AVAILABILITY						
H	C	R	W	WB	Z	ZB
✔	✔	✔	✔			

CROSS REFERENCE	
ALCON	PNF0084X284
ALCON	PNF0084X284.4
PAGID	1796
PFC	7752

FRP503

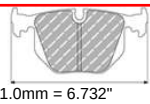
171.0mm = 6.732"

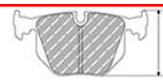
75.0mm = 2.953"


20.5mm = 0.807"


47.0mm = 1.850"

FMSI No: DR3

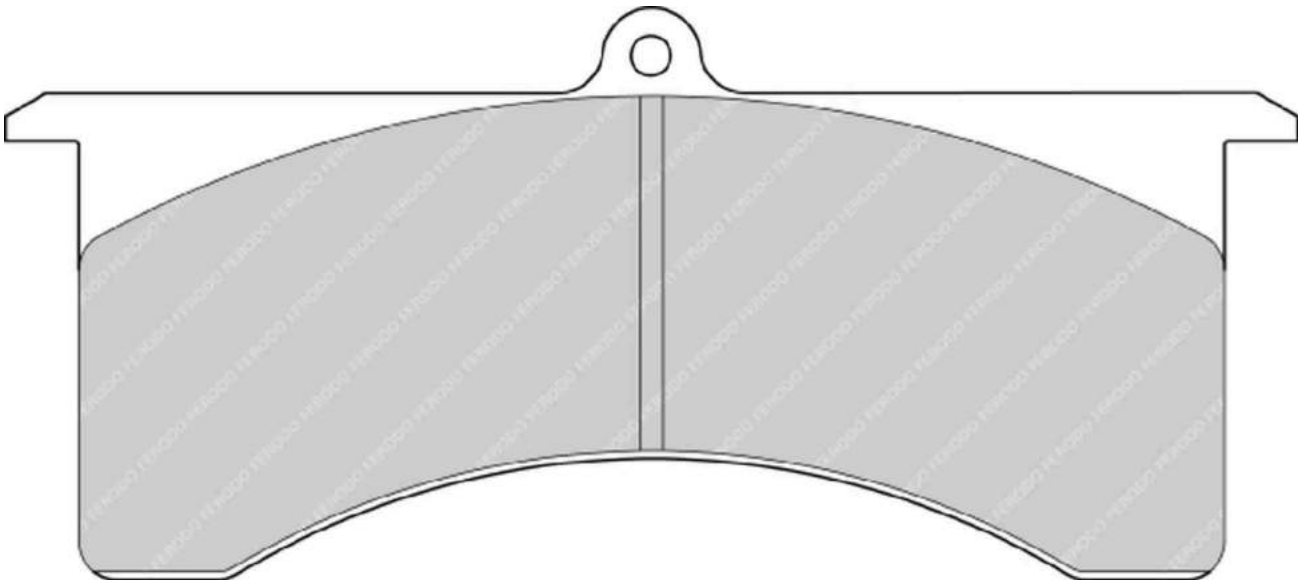

MATERIAL AVAILABILITY						
H	C	R	W	WB	Z	ZB
✖		✔	✔			

CROSS REFERENCE	
ALCON	PNF0084X350.4
AP RACING	CP5805D45
FMSI	DR3
PAGID	1798USA
Raybestos	DR200

FERODO RACING

Updated on November 2020

✔ Available
✖ Out of Range
In Introduction
Exhausting
Make to order

FRP504


100.8mm = 3.969"

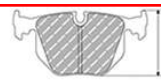
62.0mm = 2.441"


12.5mm = 0.492"


46.4mm = 1.827"

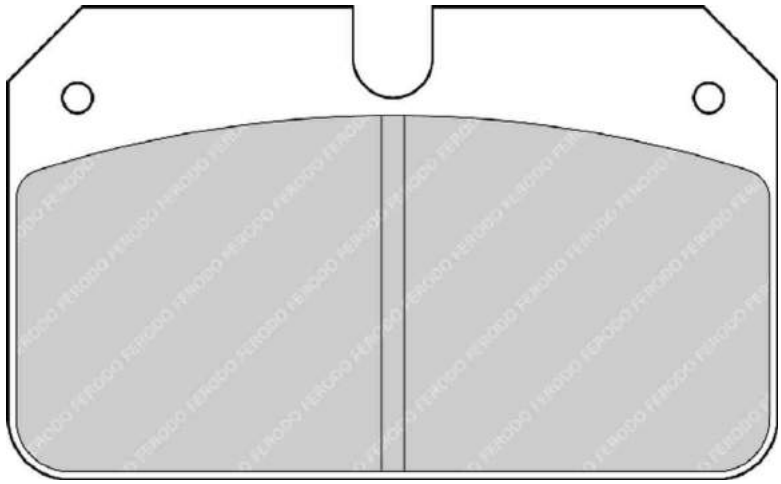

MATERIAL AVAILABILITY						
H	C	R	W	WB	Z	ZB
		✓	✓		✓	

CROSS REFERENCE	
PFC	7754

FRP506


50.5mm = 1.988"

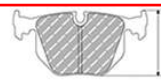
61.0mm = 2.402"


13.0mm = 0.512"


42.0mm = 1.654"

FMSI No: DR4

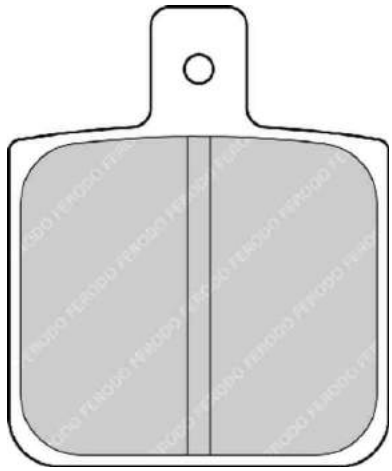

MATERIAL AVAILABILITY						
H	C	R	W	WB	Z	ZB
		✓	✓			

CROSS REFERENCE	
FMSI	DR4
HAWK	HB104
MINTEX	809
PAGID	1809USA
PFC	7757
Raybestos	DR20
Wilwood	7012

FRP1058


79.8mm = 3.142"

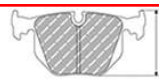
56.0mm = 2.205"


18.0mm = 0.709"


45.5mm = 1.791"

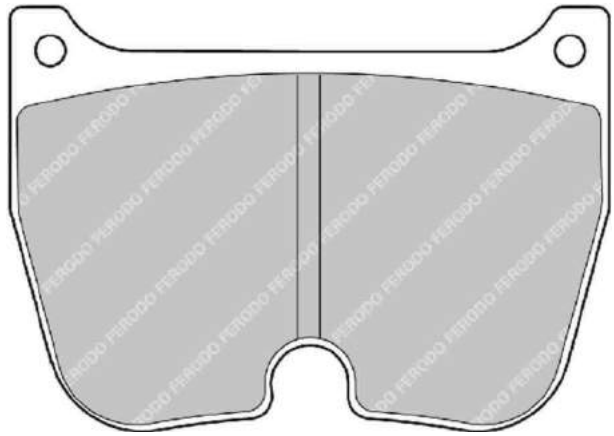

4 Pistons caliper **(1 set = 4 pads) - 2 sets per axle for the recommended applications**

ALSO AVAILABLE		
SHAPE	TH. MM	NOTES
FRP1064	20	

CROSS REFERENCE	
BREMBO	07.5684.2
PFC	7748.XX.18

MATERIAL AVAILABILITY						
H	C	R	W	WB	Z	ZB
		✔				

FERODO RACING

Updated on November 2020

✔ Available
✖ Out of Range
In Introduction
Exhausting
Make to order

FRP1059


84.8mm = 3.339"

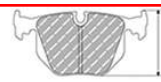
68.0mm = 2.677"


22.0mm = 0.866"


51.5mm = 2.028"

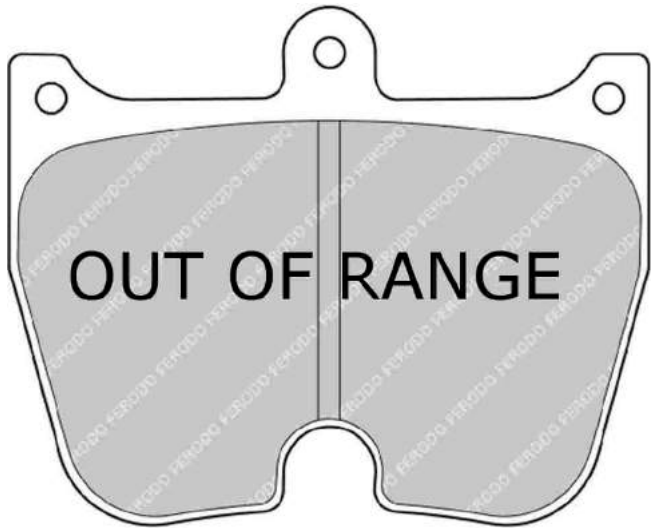

4 Pistons caliper **(1 set = 4 pads) - 2 sets per axle for the recommended applications**

ALSO AVAILABLE		
SHAPE	**TH. MM**	**NOTES**
FRP3004	**20**	
FRP3034	**21**	
FRP3045	**18**	

CROSS REFERENCE	
BREMBO	07.5868
PAGID	2105
PFC	7742.XX.22
PFC	7802.XX.22

MATERIAL AVAILABILITY						
H	**C**	**R**	**W**	**WB**	**Z**	**ZB**
		✖				

FRP1060


152.0mm = 5.984"


77.0mm = 3.031"


25.0mm = 0.984"


45.0mm = 1.772"

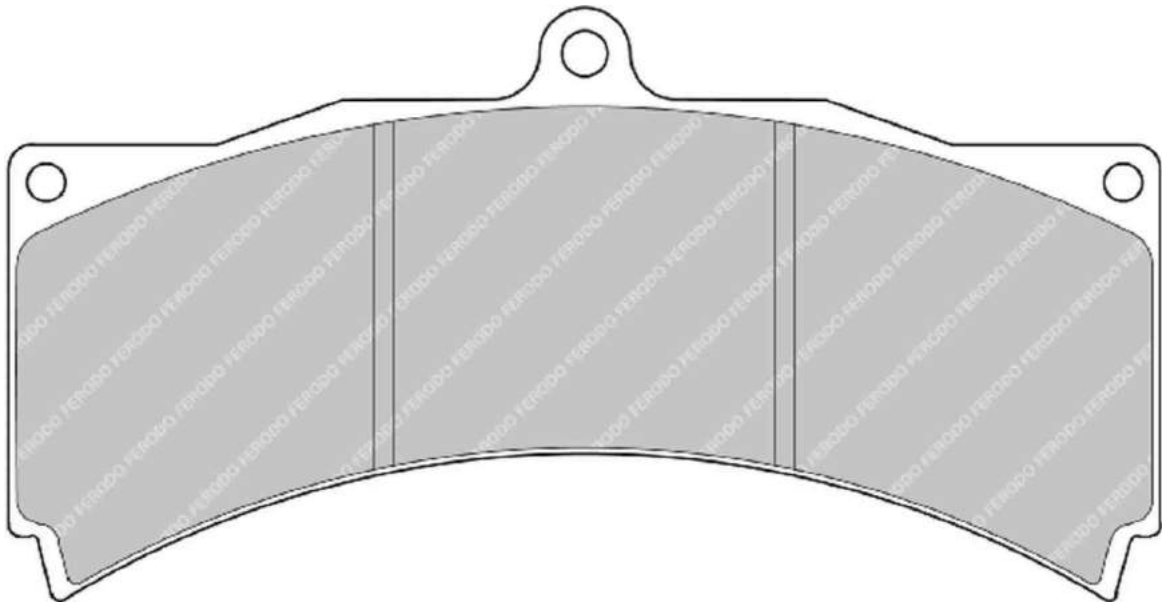

ALSO AVAILABLE		
SHAPE	TH. MM	NOTES
FRP3000	18	

CROSS REFERENCE	
AP RACING	CP3558D46
PAGID	1813

MATERIAL AVAILABILITY						
H	C	R	W	WB	Z	ZB
		✔			✔	

FRP1061


94.6mm = 3.724"

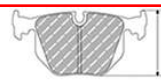
53.0mm = 2.087"


16.0mm = 0.630"


45.0mm = 1.772"

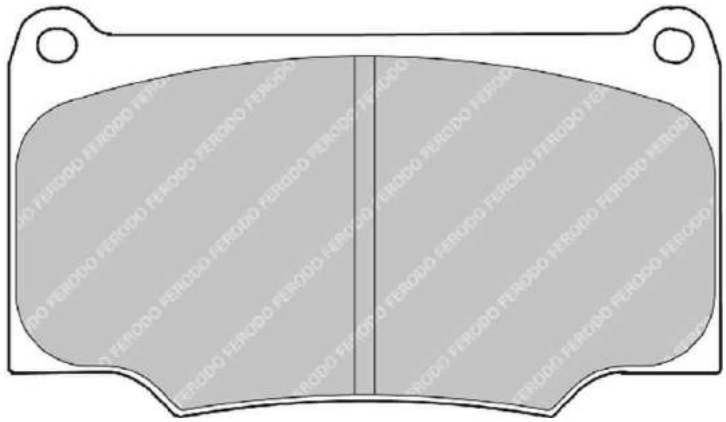

MATERIAL AVAILABILITY						
H	C	R	W	WB	Z	ZB
		✉				

CROSS REFERENCE	
AP RACING	CP4296D43
PAGID	2141
PFC	7708

FERODO RACING

Updated on November 2020

Available
Out of Range
In Introduction
Exhausting
Make to order

FRP1064


79.8mm = 3.142"

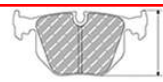
56.0mm = 2.205"


20.0mm = 0.787"


45.5mm = 1.791"

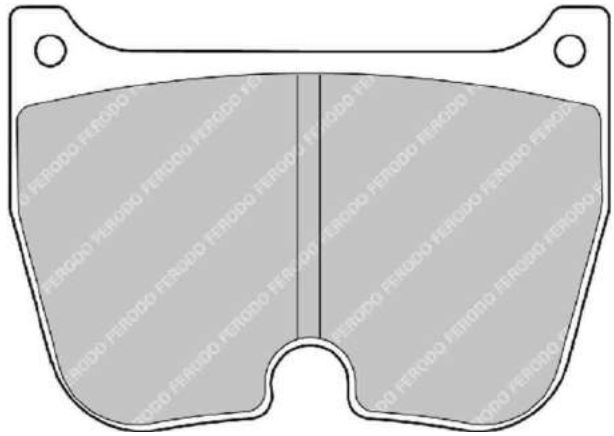

4 Pistons caliper **(1 set = 4 pads) - 2 sets per axle for the recommended applications**

ALSO AVAILABLE		
SHAPE	TH. MM	NOTES
FRP1058	18	

MATERIAL AVAILABILITY						
H	C	R	W	WB	Z	ZB

CROSS REFERENCE	
ALCON	PNF0084X282.4
BREMBO	07.5684.2
BREMBO	07.5684.25
BREMBO	07.5684.26
PAGID	2053
PFC	7748.XX.20

FRP1077

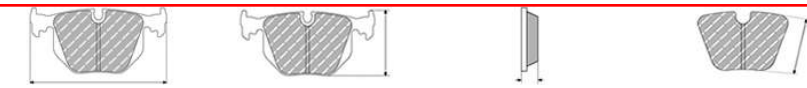

CITROEN Front / Rear, FERRARI Rear, GINETTA Rear, PEUGEOT Front

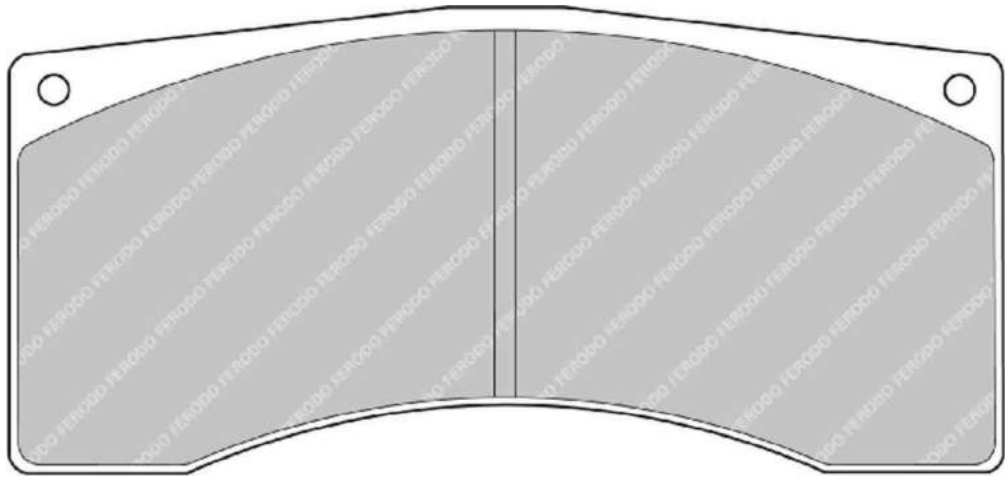

ALSO AVAILABLE		
SHAPE	TH. MM	NOTES
FRP302	20	
FRP1078	25	
FRP3007	18	
FRP3156	26.5	

MATERIAL AVAILABILITY						
H	C	R	W	WB	Z	ZB
✔		✔	✔		✔	

CROSS REFERENCE	
ALCON	PNF4441X723
ALCON	PNF4441X723.4
ALCON	PNF4441X753
ALCON	PNF4441X753S.4
ALCON	PNF4441X769.4
BREMBO	07.5139.0
BREMBO	07.5139.07
BREMBO	07.5139.19
BREMBO	B1316
CL BRAKES	5005W50TX
HAWK	HB105 0,62
HAWK	HB208
PAGID	1595
PFC	7700.XX.16
Raybestos	DR2000 0.63
Wilwood	9216

FERODO RACING

Updated on November 2020

Available
Out of Range
In Introduction
Exhausting
Make to order

FRP1078


131.8mm = 5.189"

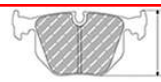
62.2mm = 2.449"


25.0mm = 0.984"


49.0mm = 1.929"

ASTON MARTIN Rear, AUDI Rear, BENTLEY Rear, BMW Rear, FERRARI Front / Rear, HONDA Rear, KTM Rear, LAMBORGHINI Rear, MCLAREN Rear, PORSCHE Rear

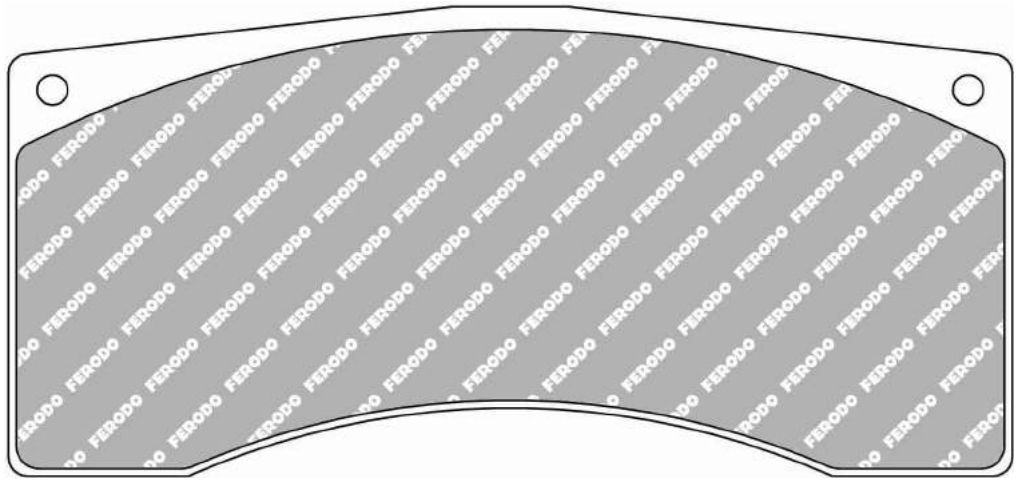

Some stock may still have centre slot

ALSO AVAILABLE		
SHAPE	TH. MM	NOTES
FRP302	20	
FRP1077	16	
FRP3007	18	
FRP3156	26.5	

MATERIAL AVAILABILITY						
H	C	R	W	WB	Z	ZB
		✔	✖	✔	✖	✉

CROSS REFERENCE	
ALCON	4441
AP RACING	CP6070D49
BREMBO	07.5139.3
BREMBO	07.5139.34
BREMBO	07.5139.81
BREMBO	B1325
PAGID	1674
PFC	7700.XX.25
Raybestos	DR2000 0.98

✔ Available ⚠ Exhausting
✖ Out of Range ✉ Make to order
In Introduction

FERODO RACING

Updated on November 2020

FRP1079



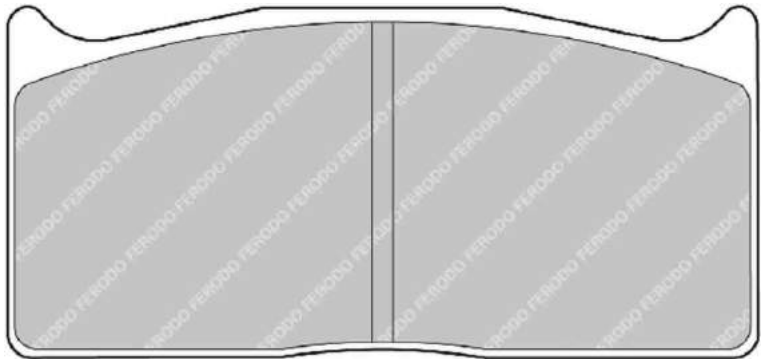

ALSO AVAILABLE		
SHAPE	TH. MM	NOTES
FRP308	20	

MATERIAL AVAILABILITY						
H	C	R	W	WB	Z	ZB
		✔				

CROSS REFERENCE	
ALCON	PNF0084X322.4
BREMBO	07.5064.49
BREMBO	07.5064.8
BREMBO	07.5064.82
BREMBO	07.5064.84
BREMBO	B0916
PAGID	1705
PFC	7735.XX.16

FERODO RACING

Updated on November 2020

Available
Out of Range
In Introduction
Exhausting
Make to order

FRP3000


152.0mm = 5.984"


77.0mm = 3.031"


18.0mm = 0.709"


45.0mm = 1.772"

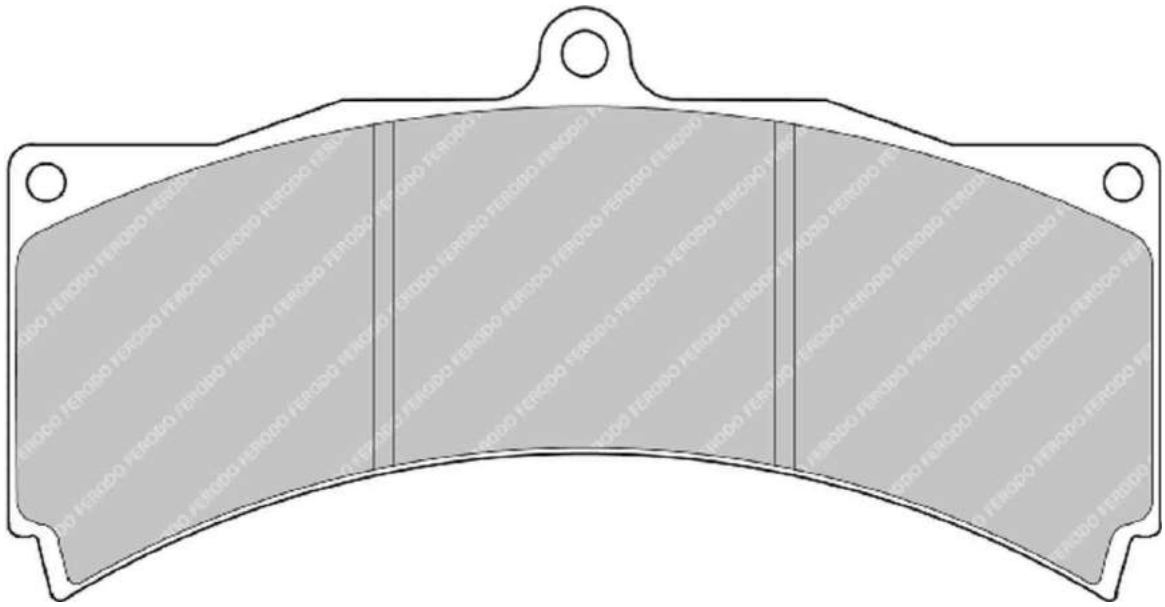

ALSO AVAILABLE		
SHAPE	TH. MM	NOTES
FRP1060	25	

MATERIAL AVAILABILITY						
H	C	R	W	WB	Z	ZB
✔		✔	✉			

CROSS REFERENCE	
ALCON	PNF4489X519.4
ALCON	PNF4489X562.4
ALCON	PNF4489X565.4
AP RACING	CP3894D46
PAGID	1852

FRP3001


94.6mm = 3.724"

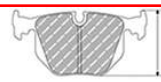
48.0mm = 1.890"


14.5mm = 0.571"


36.0mm = 1.417"

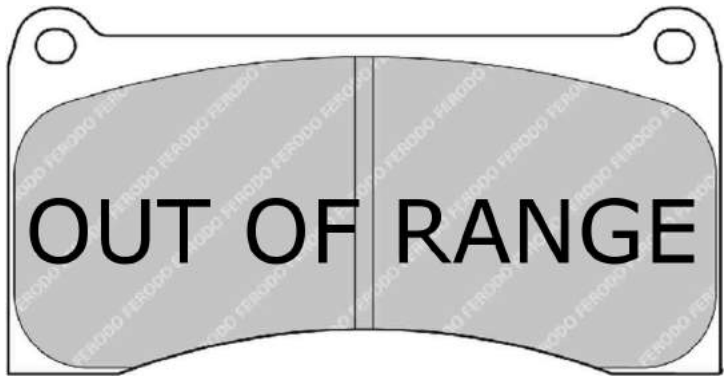

April 2018: Out of range

MATERIAL AVAILABILITY						
H	C	R	W	WB	Z	ZB
✖	✖	✖				

CROSS REFERENCE	
AP RACING	CP4140D36

✔ Available
✖ Out of Range
In Introduction
Exhausting
Make to order

FERODO RACING

Updated on November 2020

FRP3003



152.1mm = 5.988" 80.0mm = 3.150" 18.0mm = 0.709" 54.0mm = 2.126"

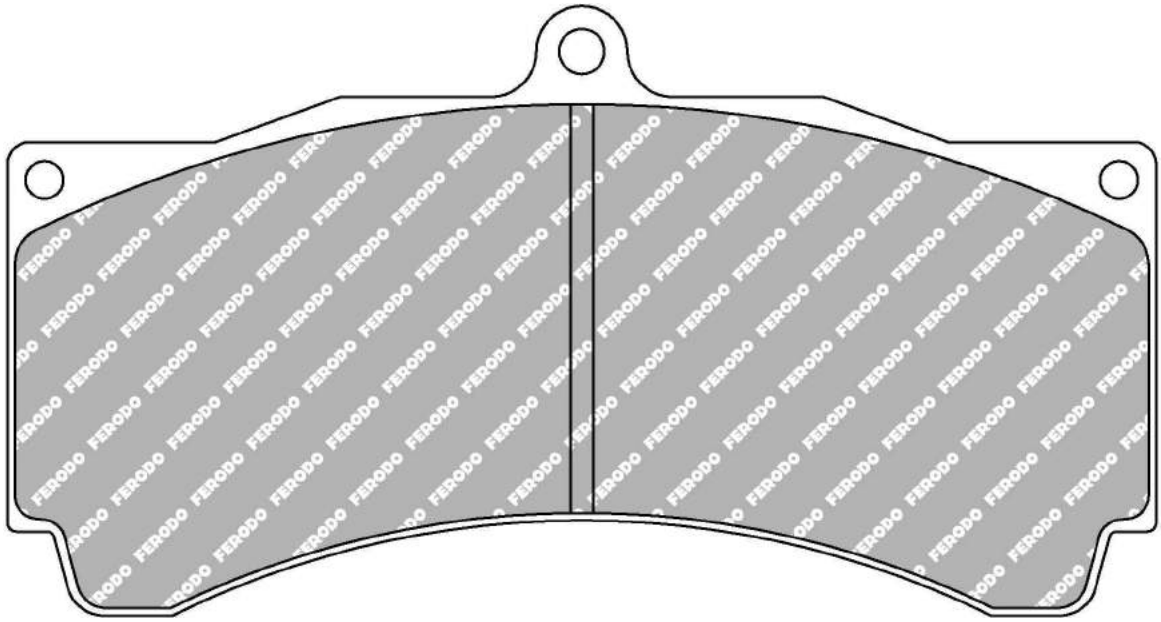

ALSO AVAILABLE		
SHAPE	TH. MM	NOTES
FRP3014	25	without top tab
FRP3015	28.5	without top tab
FRP3077	17	with top tab
FRP3144	18	without top tab
FRP3145	17	without top tab

MATERIAL AVAILABILITY						
H	C	R	W	WB	Z	ZB
✔		✔	✔		✖	

CROSS REFERENCE	
ALCON	PNF4489X532.4
AP RACING	CP3894D54
BREMBO	B5118
HAWK	HB109 0,71
PAGID	1904
PFC	7790.XX.18
Raybestos	DR2600 0.71
Wilwood	8818

FERODO RACING

Updated on November 2020

✔ Available ⚠ Exhausting
✖ Out of Range ✉ Make to order
In Introduction

FRP3004

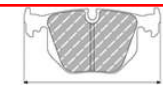
84.8mm = 3.339"


68.0mm = 2.677"


20.0mm = 0.787"


51.5mm = 2.028"

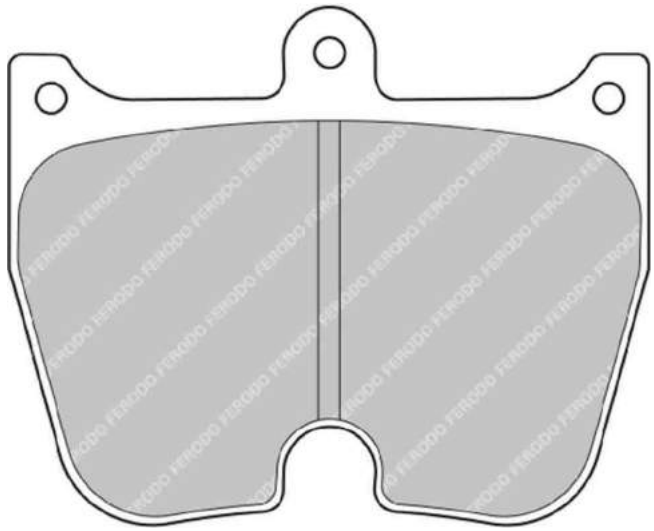

4 Pistons caliper **(1 set = 4 pads) - 2 sets per axle for the recommended applications**

ALSO AVAILABLE		
SHAPE	**TH. MM**	**NOTES**
FRP1059	**22**	
FRP3034	**21**	
FRP3045	**18**	

MATERIAL AVAILABILITY						
H	**C**	**R**	**W**	**WB**	**Z**	**ZB**

CROSS REFERENCE	
ALCON	PNF0084X283.4
BREMBO	07.5868.2
BREMBO	07.5868.29
PFC	7742.XX.20
PFC	7802.XX.20

FRP3006


152.0mm = 5.984"

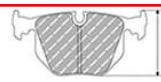
80.0mm = 3.150"


16.0mm = 0.630"


54.0mm = 2.126"

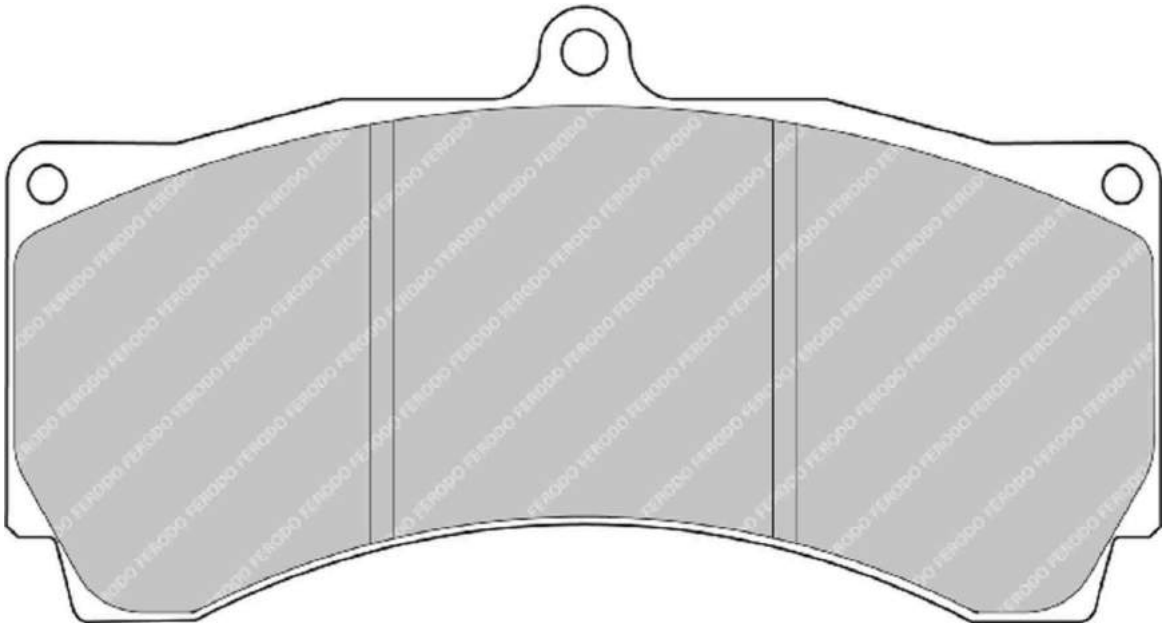

MATERIAL AVAILABILITY						
H	C	R	W	WB	Z	ZB

CROSS REFERENCE	
AP RACING	CP3796D54

FERODO RACING

Updated on November 2020

Available
Out of Range
In Introduction
Exhausting
Make to order

FRP3007


131.8mm = 5.189"

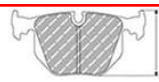
62.2mm = 2.449"


18.0mm = 0.709"


49.0mm = 1.929"

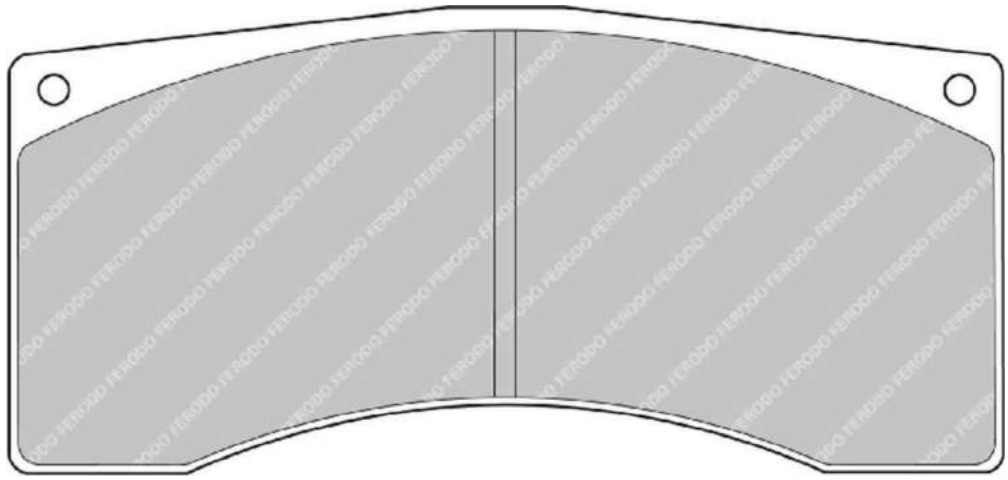

ALSO AVAILABLE		
SHAPE	TH. MM	NOTES
FRP302	20	
FRP1077	16	
FRP1078	25	
FRP3156	26.5	

CROSS REFERENCE	
PFC	7700.XX.18

MATERIAL AVAILABILITY						
H	C	R	W	WB	Z	ZB
		✔			✔	

✔ Available
✖ Out of Range
In Introduction
Exhausting
Make to order

FERODO RACING

Updated on November 2020

FRP3009


131.7mm = 5.185"

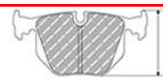
69.0mm = 2.717"


16.0mm = 0.630"


59.0mm = 2.323"

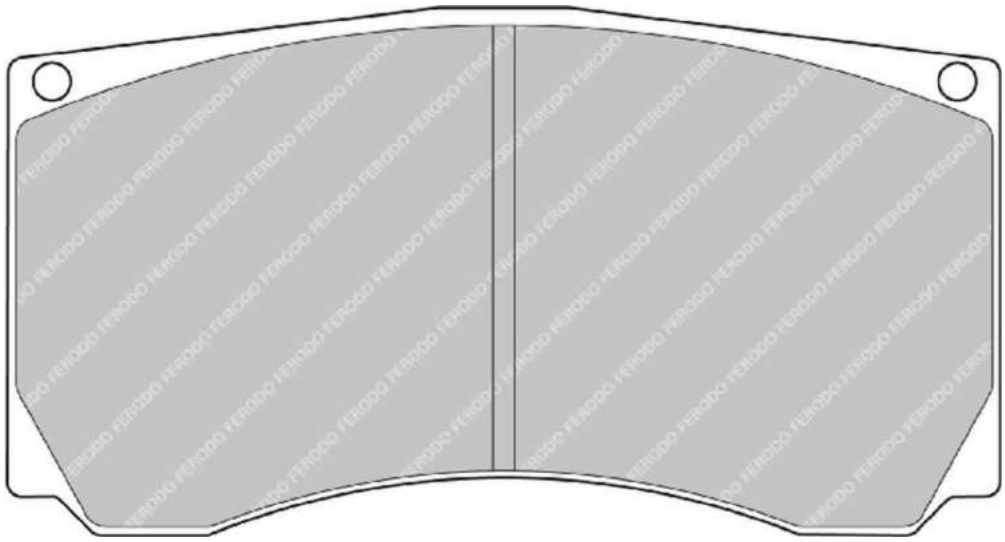

ALSO AVAILABLE		
SHAPE	TH. MM	NOTES
FRP3012	20	

MATERIAL AVAILABILITY						
H	C	R	W	WB	Z	ZB

CROSS REFERENCE	
ALCON	PNF4476X545
ALCON	PNF4476X545.4
PAGID	2743
PFC	7755

FERODO RACING

Updated on November 2020

Available
Out of Range
In Introduction
Exhausting
Make to order

FRP3012

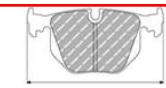
131.7mm = 5.185"

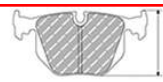
69.0mm = 2.717"


20.0mm = 0.787"


59.0mm = 2.323"

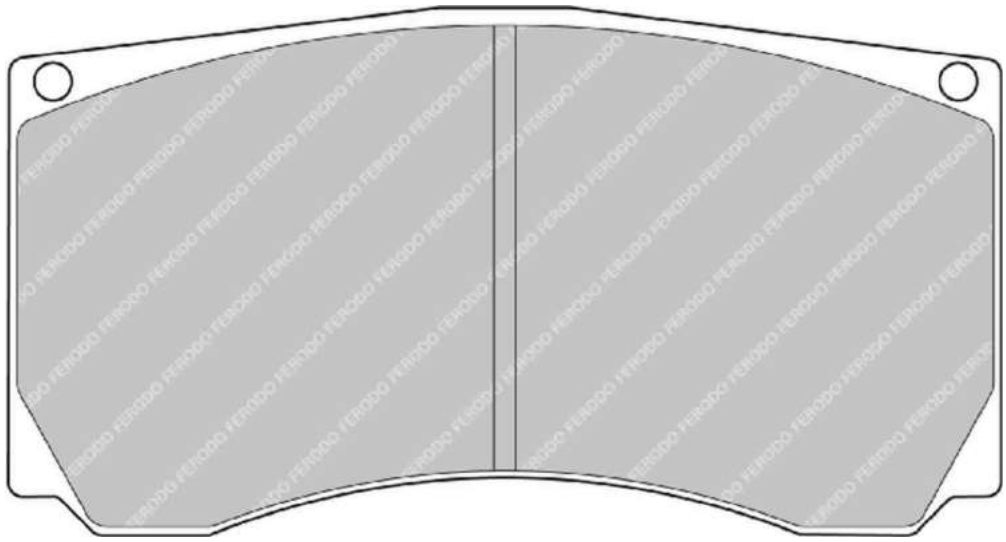

ALSO AVAILABLE		
SHAPE	TH. MM	NOTES
FRP3009	16	

MATERIAL AVAILABILITY						
H	C	R	W	WB	Z	ZB

CROSS REFERENCE	
ALCON	PNF4476X549
ALCON	PNF4476X549.4
PAGID	1756
PFC	7756

FRP3014


152.1mm = 5.988"

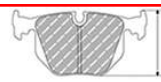
68.9mm = 2.713"


25.0mm = 0.984"


54.0mm = 2.126"

ASTON MARTIN Front, SEAT Front

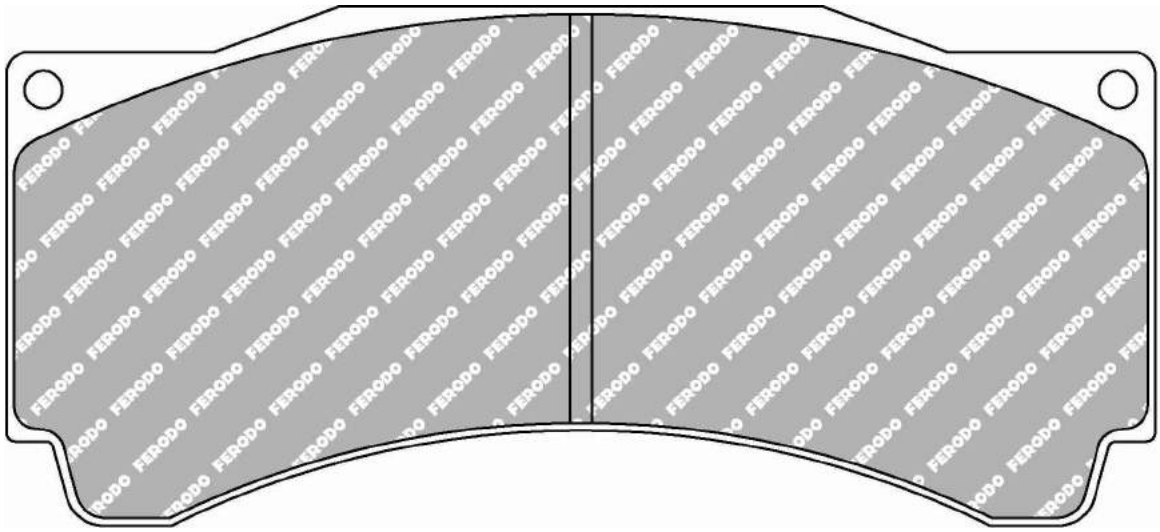

ALSO AVAILABLE		
SHAPE	**TH. MM**	**NOTES**
FRP3003	**18**	**with top tab**
FRP3015	**28.5**	**without top tab**
FRP3077	**17**	**with top tab**
FRP3144	**18**	**without top tab**
FRP3145	**17**	**without top tab**

MATERIAL AVAILABILITY						
H	**C**	**R**	**W**	**WB**	**Z**	**ZB**
✉		✔	✔		✖	✔

CROSS REFERENCE	
AP RACING	CP3558D54
BREMBO	B5125
PAGID	1539
PAGID	8245
PFC	7790.XX.25
Raybestos	DR2600 0.98
Wilwood	8825

FERODO RACING

Updated on November 2020

✔ Available ⚠ Exhausting
✖ Out of Range ✉ Make to order
In Introduction

FRP3015


152.1mm = 5.988"

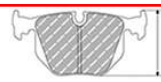
68.9mm = 2.713"


28.5mm = 1.122"


54.0mm = 2.126"

GINETTA Front

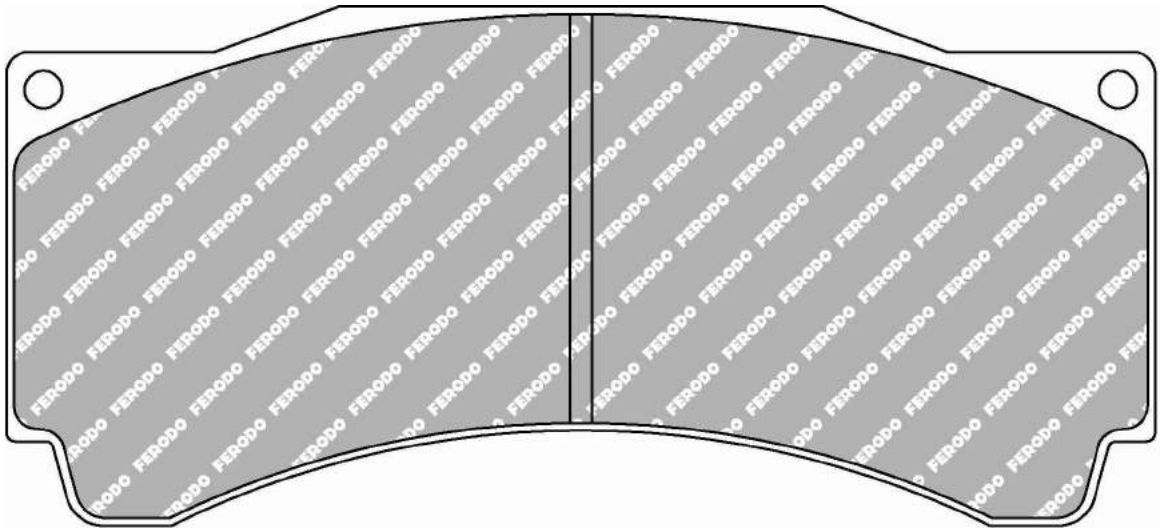

ALSO AVAILABLE		
SHAPE	TH. MM	NOTES
FRP3003	18	with top tab
FRP3014	25	without top tab
FRP3077	17	with top tab
FRP3144	18	without top tab
FRP3145	17	without top tab

CROSS REFERENCE	
ALCON	PNF4489X543
AP RACING	CP4595D54
BREMBO	B5128
PAGID	8250
PFC	7790.XX.28
Wilwood	8828

MATERIAL AVAILABILITY						
H	C	R	W	WB	Z	ZB

FRP3018

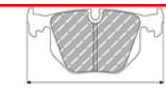
132.4mm = 5.213"


55.0mm = 2.165"


16.7mm = 0.657"


42.0mm = 1.654"

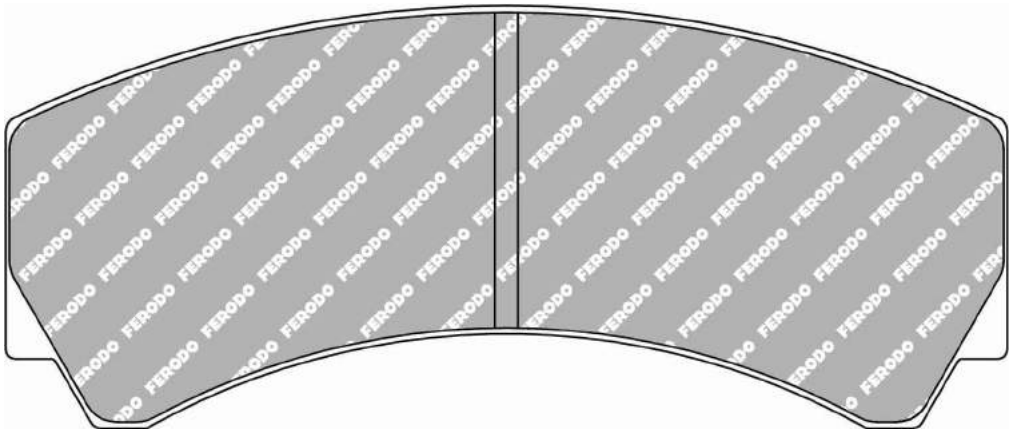

ALSO AVAILABLE		
SHAPE	TH. MM	NOTES
FRP3073	20.3	

MATERIAL AVAILABILITY						
H	C	R	W	WB	Z	ZB
✓		✓	✗	✓	✉	

CROSS REFERENCE	
ALCON	PNF0084X276.4
AP RACING	CP3215D42
BREMBO	B5417
PAGID	2126
PFC	7768.XX.16

FRP3020


86.2mm = 3.394"

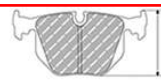
63.0mm = 2.480"


15.0mm = 0.591"


46.0mm = 1.811"

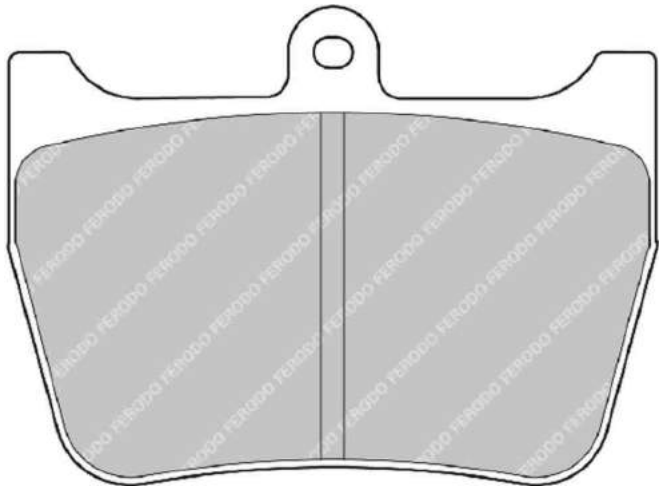

4 Pistons caliper (1 set = 4 pads) - 2 sets per axle for the recommended applications

ALSO AVAILABLE		
SHAPE	TH. MM	NOTES
FRP3086	18	

MATERIAL AVAILABILITY						
H	C	R	W	WB	Z	ZB
		✓				

CROSS REFERENCE	
AP RACING	CP5148D46
PFC	7804.XX.15

FERODO RACING

Updated on November 2020

✓ Available
✗ Out of Range
In Introduction
Exhausting
Make to order

FRP3021

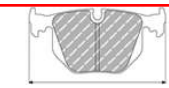
113.7mm = 4.476"

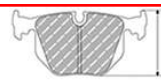
43.0mm = 1.693"


16.0mm = 0.630"


36.6mm = 1.441"

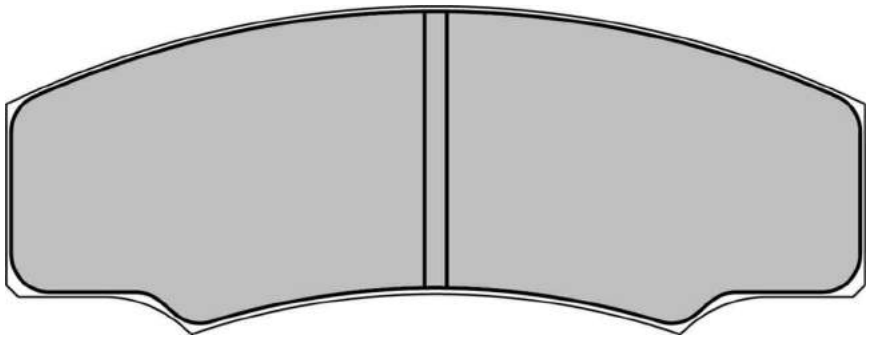

MATERIAL AVAILABILITY						
H	C	R	W	WB	Z	ZB
	✉					

CROSS REFERENCE	
AP RACING	CP2340D38

FRP3022


79.8mm = 3.142"

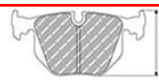
62.0mm = 2.441"


20.0mm = 0.787"


50.5mm = 1.988"

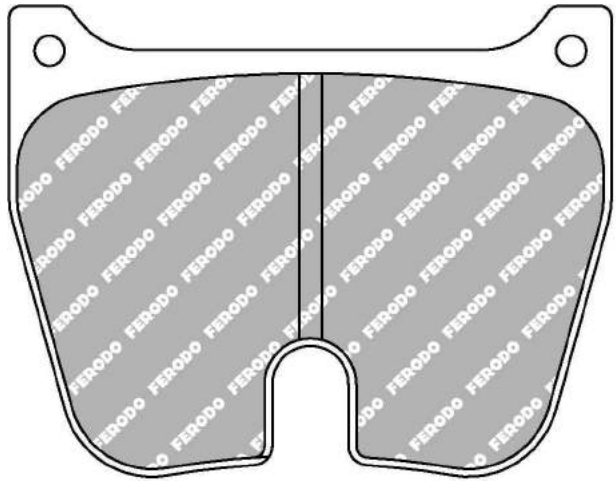

4 Pistons caliper (1 set = 4 pads) - 2 sets per axle for the recommended applications

ALSO AVAILABLE		
SHAPE	TH. MM	NOTES
FRP3023	17.5	
FRP3033	21	

MATERIAL AVAILABILITY						
H	C	R	W	WB	Z	ZB
		✓	✉			

CROSS REFERENCE	
BREMBO	07.5684.5
BREMBO	07.5684.52
BREMBO	07.5684.56
PFC	7743.XX.20

FRP3023


79.8mm = 3.142"

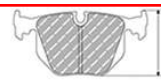
62.0mm = 2.441"


17.5mm = 0.689"


50.5mm = 1.988"

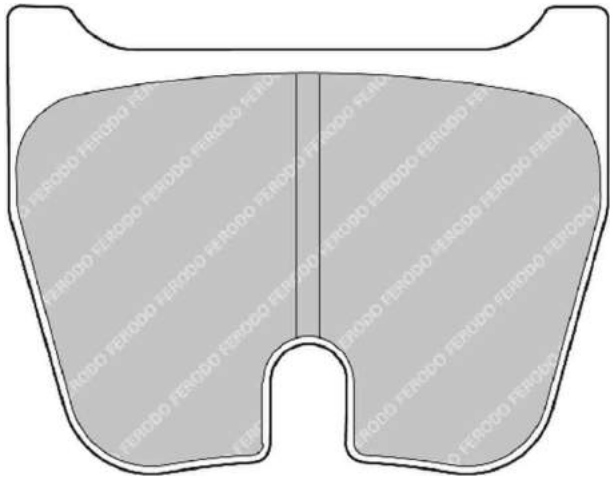

4 Pistons caliper (1 set = 4 pads) - 2 sets per axle for the recommended applications

ALSO AVAILABLE		
SHAPE	TH. MM	NOTES
FRP3022	20	
FRP3033	21	

CROSS REFERENCE	
BREMBO	07.5684.5
BREMBO	07.5684.53
BREMBO	07.5684.55
PFC	7743.XX.17

MATERIAL AVAILABILITY						
H	C	R	W	WB	Z	ZB
		✔				

FERODO RACING

Updated on November 2020

✔ Available
✖ Out of Range
In Introduction
Exhausting
Make to order

FRP3024


139.8mm = 5.504"

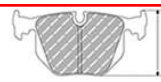
61.4mm = 2.417"


20.0mm = 0.787"


48.4mm = 1.906"

FERRARI Front

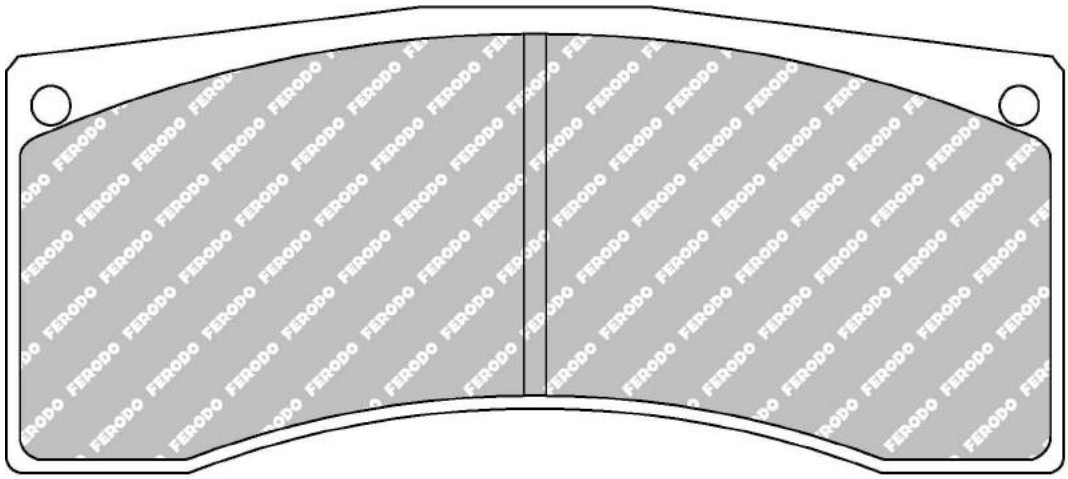

ALSO AVAILABLE		
SHAPE	TH. MM	NOTES
FRP3029	26	
FRP3030	28	
FRP3087	17.5	
FRP3140	16	

MATERIAL AVAILABILITY						
H	C	R	W	WB	Z	ZB
		✔	✔		✔	

CROSS REFERENCE	
AP RACING	CP5788D48
BREMBO	07.5169.9
BREMBO	07.5169.90
BREMBO	07.5169.92
BREMBO	B1820
BREMBO	B1820
BREMBO	B2620
BREMBO	B2620
HAWK	HB130
PAGID	1896
PFC	7770.XX.20
Wilwood	9720

FRP3025


149.8mm = 5.898"

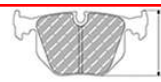
73.0mm = 2.874"


30.0mm = 1.181"


66.0mm = 2.598"

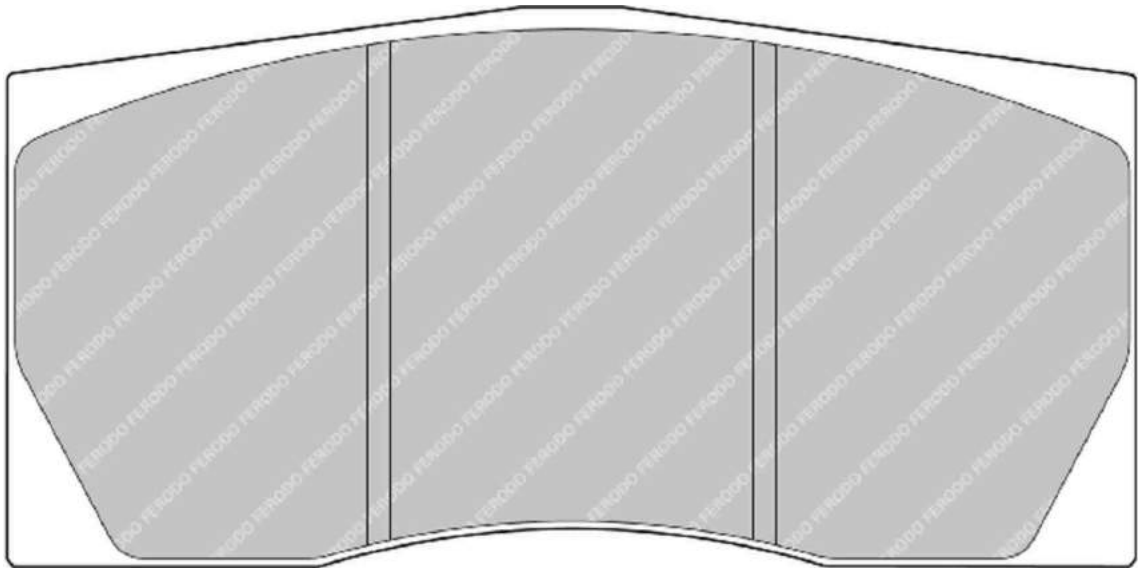

MATERIAL AVAILABILITY						
H	C	R	W	WB	Z	ZB
		✉				

CROSS REFERENCE	
ALCON	PNF0084X305.4
PFC	7683

FRP3026

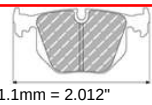
51.1mm = 2.012"

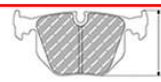
62.0mm = 2.441"


20.0mm = 0.787"


51.0mm = 2.008"



MATERIAL AVAILABILITY						
H	C	R	W	WB	Z	ZB
		✉				

CROSS REFERENCE	
ALCON	PNF4493X501.4
ALCON	PNF4493X502
ALCON	PNF4493X503

FERODO RACING

Updated on November 2020

✔ Available
✖ Out of Range
In Introduction
Exhausting
Make to order

FRP3027



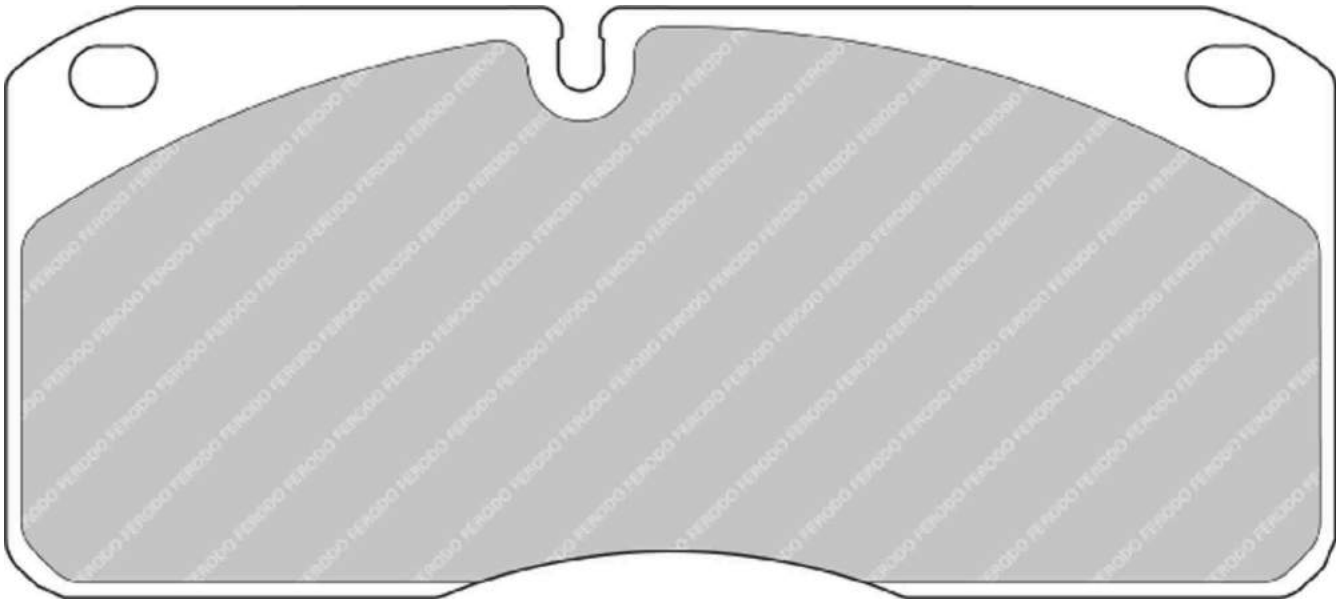

MATERIAL AVAILABILITY						
H	C	R	W	WB	Z	ZB
✓		✉				

CROSS REFERENCE	
ALCON	PNF0084X222
ALCON	PNF0084X222.4
AP RACING	CP8310D70

✓ Available
✗ Out of Range
In Introduction
Exhausting
Make to order

FERODO RACING

Updated on November 2020

FRP3028


131.8mm = 5.189"

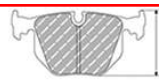
67.0mm = 2.638"


16.0mm = 0.630"


51.5mm = 2.028"

ASTON MARTIN Front

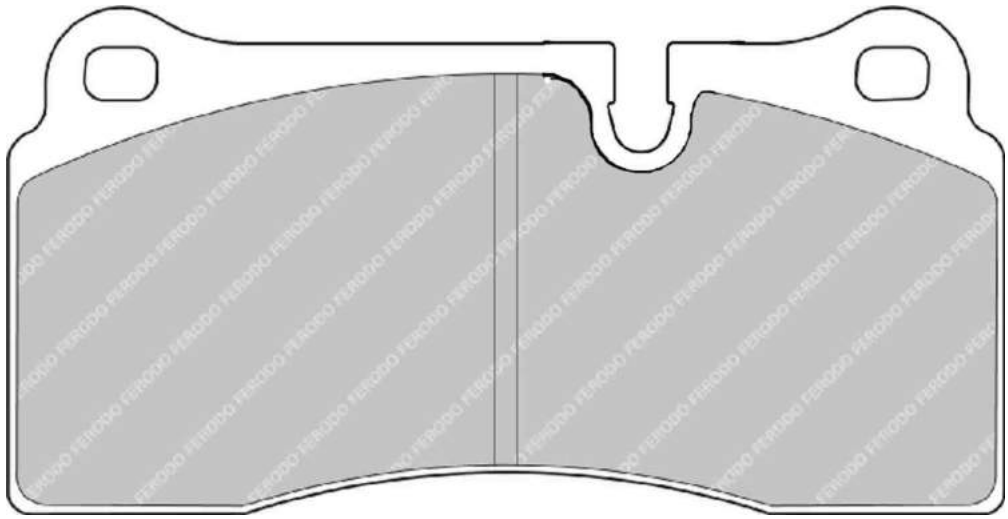

ALSO AVAILABLE		
SHAPE	TH. MM	NOTES
FCP1281	18.2	

CROSS REFERENCE	
BREMBO	B1517
HAWK	HB193 0,61
PFC	7780.XX.16

MATERIAL AVAILABILITY						
H	C	R	W	WB	Z	ZB
✔		✔	✉		✉	

FERODO RACING

Updated on November 2020

Available
Out of Range
In Introduction
Exhausting
Make to order

FRP3029


139.8mm = 5.504"

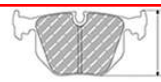
61.4mm = 2.417"


26.0mm = 1.024"


48.4mm = 1.906"

FMSI No: DR53

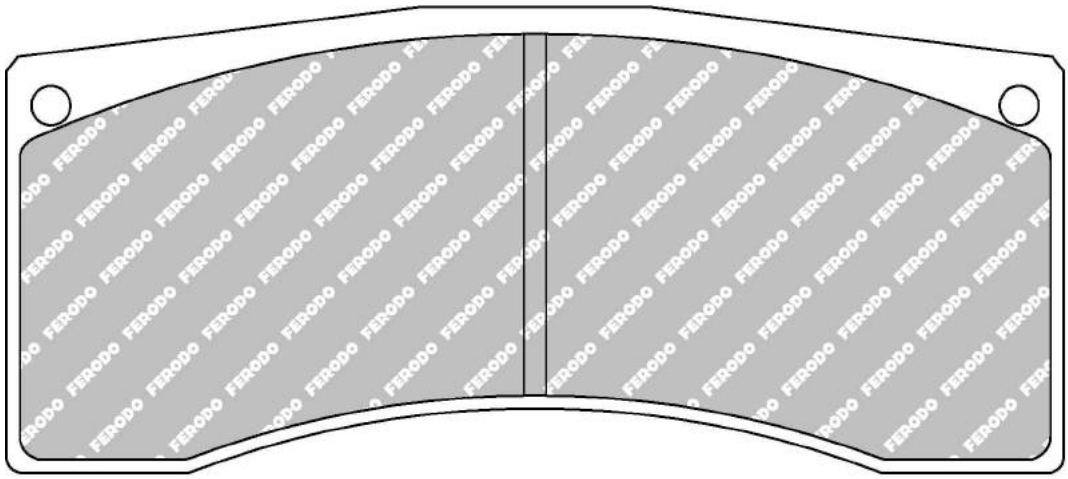

ALSO AVAILABLE		
SHAPE	TH. MM	NOTES
FRP3024	20	
FRP3030	28	
FRP3087	17.5	
FRP3140	16	

MATERIAL AVAILABILITY						
H	C	R	W	WB	Z	ZB
✉		✉	✓		✓	

CROSS REFERENCE	
AP RACING	CP5788D48
BREMBO	07.7859.1
BREMBO	07.7859.10
BREMBO	07.7859.11
BREMBO	B1826
FMSI	DR53
HAWK	HB688
MINTEX	1981
PAGID	1619
PFC	7770.XX.26
Raybestos	DR809
Wilwood	5916
Wilwood	9725

✓ Available
✗ Out of Range
In Introduction
Exhausting
✉ Make to order

FERODO RACING

Updated on November 2020

FRP3030


139.8mm = 5.504"

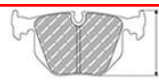
61.4mm = 2.417"


28.0mm = 1.102"


48.4mm = 1.906"

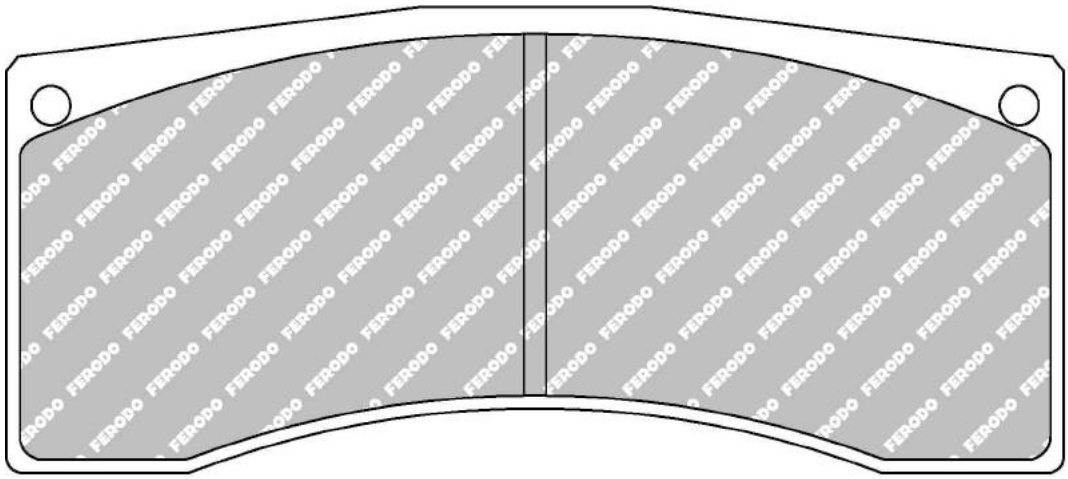

ALSO AVAILABLE		
SHAPE	TH. MM	NOTES
FRP3024	20	
FRP3029	26	
FRP3087	17.5	
FRP3140	16	

MATERIAL AVAILABILITY						
H	C	R	W	WB	Z	ZB
					✔	

CROSS REFERENCE	
BREMBO	07.7859.2
BREMBO	07.7859.20
BREMBO	07.7859.21
PAGID	1618
PAGID	1618
PFC	7770.XX.26
Wilwood	9728

FERODO RACING

Updated on November 2020

Available
Out of Range
In Introduction
Exhausting
Make to order

FRP3031


163.8mm = 6.449"

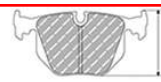
66.0mm = 2.598"


29.0mm = 1.142"


52.5mm = 2.067"

PORSCHE Front, RENAULT-ALPINE Front

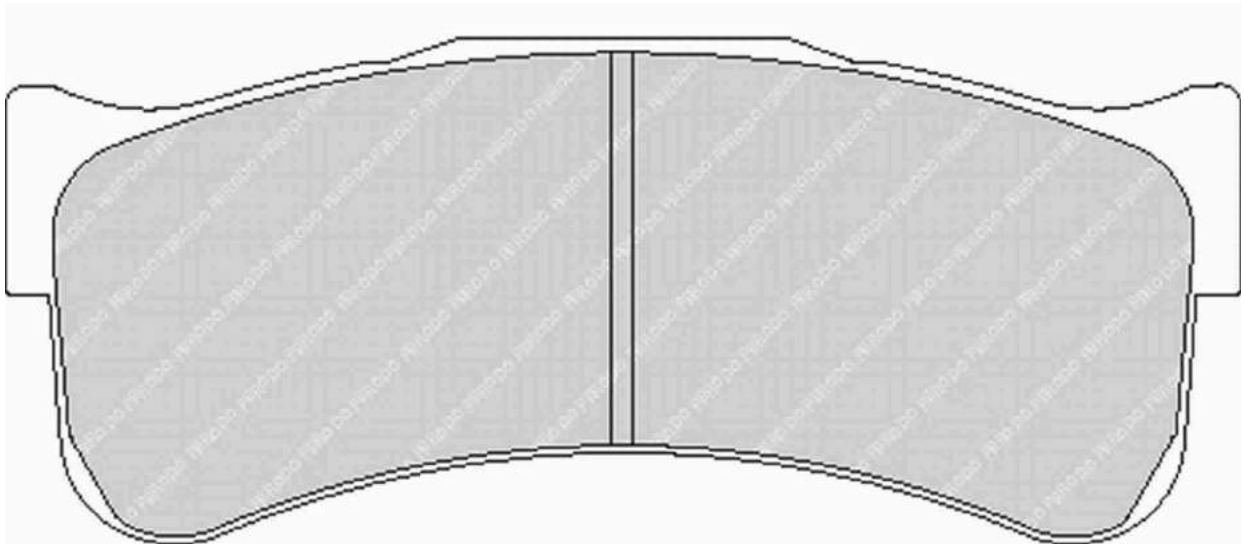

ALSO AVAILABLE		
SHAPE	TH. MM	NOTES
FRP3110	25	
FRP3123	21.5	

MATERIAL AVAILABILITY						
H	C	R	W	WB	Z	ZB
		✉	✔		✖	✔

CROSS REFERENCE	
BREMBO	07.7293.6
BREMBO	07.7293.60
BREMBO	07.7293.61
BREMBO	07.7293.63
BREMBO	07.7293.70
BREMBO	B2429
PAGID	2488
PFC	7797.XX.29

FRP3032


131.8mm = 5.189"

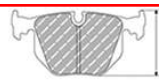
61.0mm = 2.402"


16.0mm = 0.630"


42.5mm = 1.673"

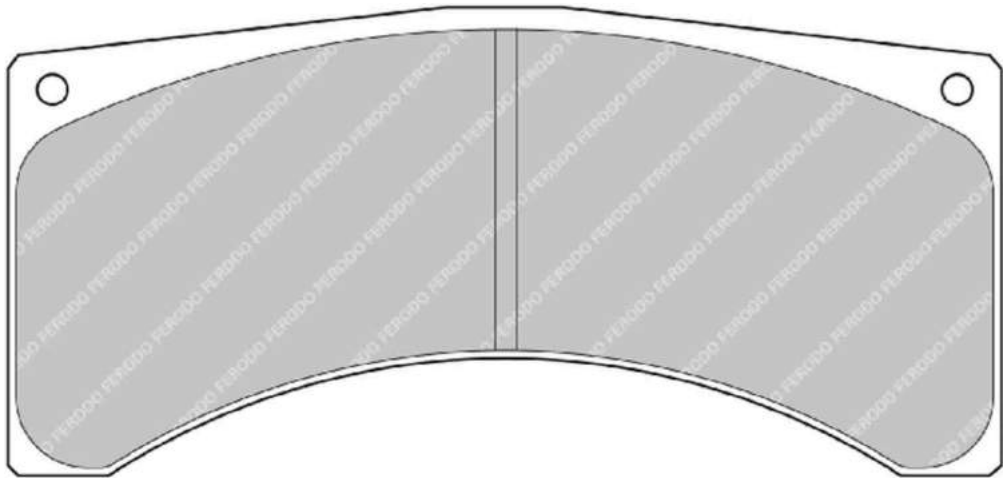

ALSO AVAILABLE		
SHAPE	TH. MM	NOTES
FRP3070	18	

MATERIAL AVAILABILITY						
H	C	R	W	WB	Z	ZB
		✔			✉	

CROSS REFERENCE	
BREMBO	07.5139
BREMBO	07.5139.85
BREMBO	07.5139.88
PFC	7718.XX.16

FERODO RACING

Updated on November 2020

✔ Available
✖ Out of Range
In Introduction
Exhausting
Make to order

FRP3033


79.8mm = 3.142"

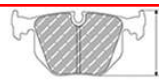
62.0mm = 2.441"


21.0mm = 0.827"


50.5mm = 1.988"

FMSI No: DR14

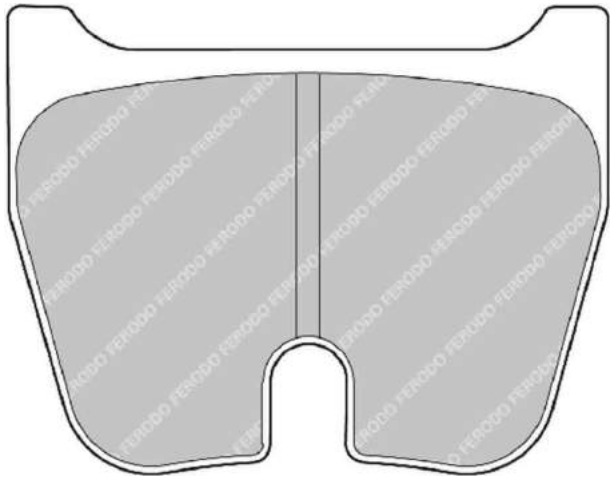

ALSO AVAILABLE		
SHAPE	TH. MM	NOTES
FRP3022	20	
FRP3023	17.5	

MATERIAL AVAILABILITY						
H	C	R	W	WB	Z	ZB

CROSS REFERENCE	
AP RACING	747
BREMBO	07.5684.8
BREMBO	07.5684.80
BREMBO	07.5684.81
FMSI	DR14
HAWK	HB186
PFC	7743.XX.21
Raybestos	DR801

Available
Out of Range
In Introduction
Exhausting
Make to order

FERODO RACING

Updated on November 2020

FRP3034


84.8mm = 3.339"

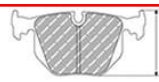
68.0mm = 2.677"


21.0mm = 0.827"


51.5mm = 2.028"

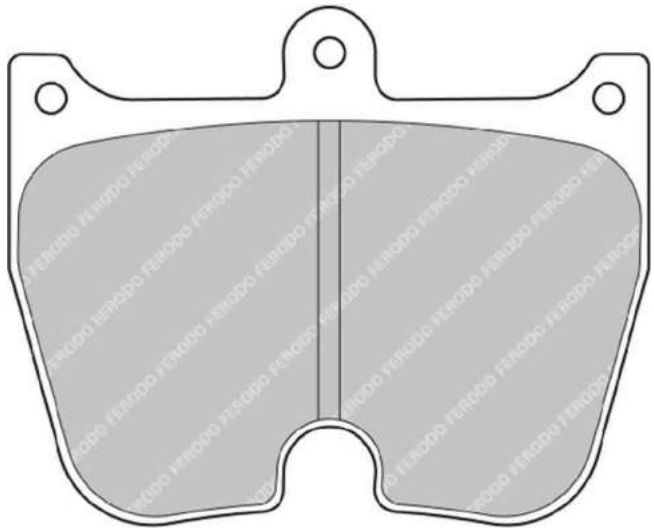

4 Pistons caliper **(1 set = 4 pads) - 2 sets per axle for the recommended applications**

ALSO AVAILABLE		
SHAPE	TH. MM	NOTES
FRP1059	22	
FRP3004	20	
FRP3045	18	

CROSS REFERENCE	
BREMBO	07.7810.2
BREMBO	07.7810.20
BREMBO	07.7810.21
PFC	7742.XX.21

MATERIAL AVAILABILITY						
H	C	R	W	WB	Z	ZB

FERODO RACING

Updated on November 2020

Available
Out of Range
In Introduction
Exhausting
Make to order

FRP3035

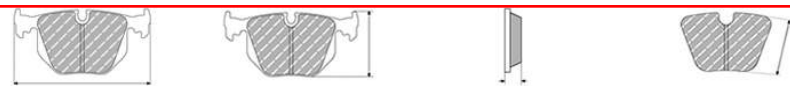

84.8mm = 3.339" 73.0mm = 2.874" 21.0mm = 0.827" 56.5mm = 2.224"

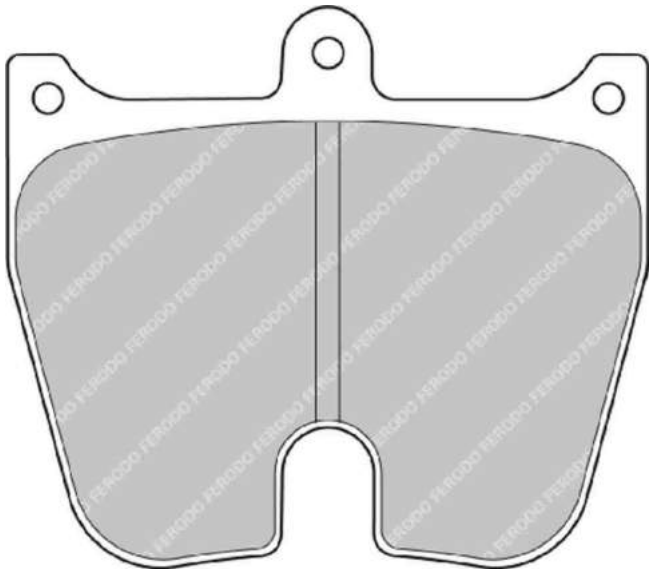

4 Pistons caliper (1 set = 4 pads) - 2 sets per axle for the recommended applications

MATERIAL AVAILABILITY						
H	C	R	W	WB	Z	ZB

CROSS REFERENCE	
BREMBO	07.7810.1
BREMBO	07.7810.10
BREMBO	07.7810.11

Available
Out of Range
In Introduction
Exhausting
Make to order

FERODO RACING

Updated on November 2020

3289

FRP3037


163.1mm = 6.421"

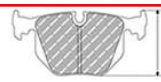
69.0mm = 2.717"


28.0mm = 1.102"


54.0mm = 2.126"

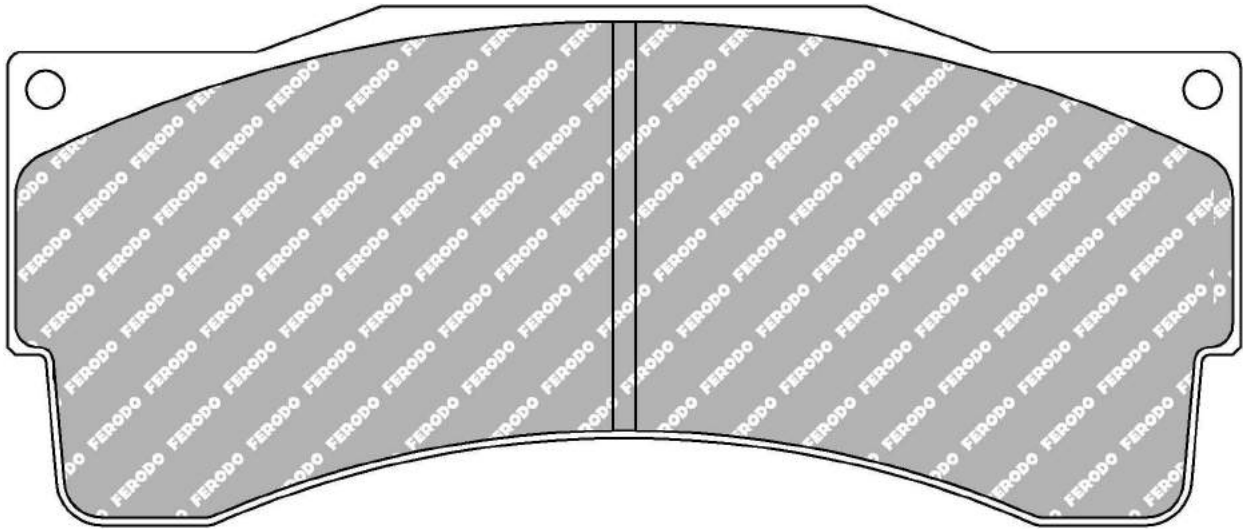

ALSO AVAILABLE		
SHAPE	TH. MM	NOTES
FRP3039	25	
FRP3055	30	

MATERIAL AVAILABILITY						
H	C	R	W	WB	Z	ZB

CROSS REFERENCE	
ALCON	PNF4495X514.4
ALCON	PNF4495X516.4
AP RACING	CP6210D54 (28 mm)
BREMBO	B5528
PAGID	2557
PFC	7778.XX.28

FERODO RACING

Updated on November 2020

Available
Out of Range
In Introduction
Exhausting
Make to order

FRP3039


163.1mm = 6.421"

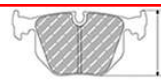
69.0mm = 2.717"


25.0mm = 0.984"


54.0mm = 2.126"

KTM Front

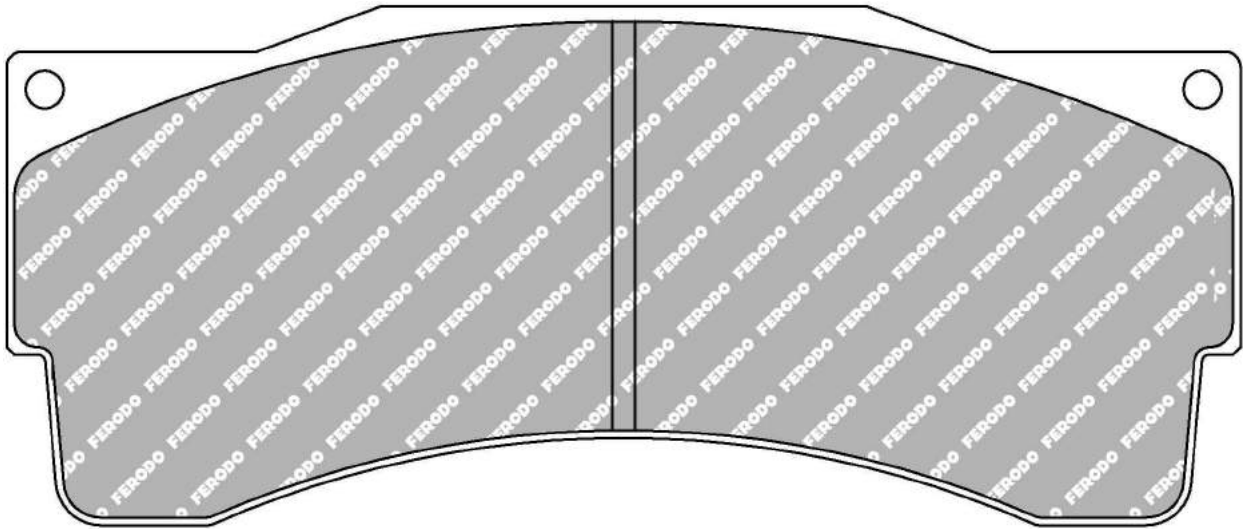

ALSO AVAILABLE		
SHAPE	TH. MM	NOTES
FRP3037	28	
FRP3055	30	

MATERIAL AVAILABILITY						
H	C	R	W	WB	Z	ZB
✉		✔	✉		✖	✉

CROSS REFERENCE	
ALCON	PNF4495X501.4
AP RACING	CP6230D54 (25 mm)
BREMBO	B5525
PAGID	2688
PAGID	8222
PFC	7778.XX.25

✔ Available
✖ Out of Range
In Introduction
Exhausting
✉ Make to order

FERODO RACING

Updated on November 2020

FRP3040


163.9mm = 6.453"

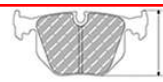
66.0mm = 2.598"


30.0mm = 1.181"


62.0mm = 2.441"

FMSI No: DR39

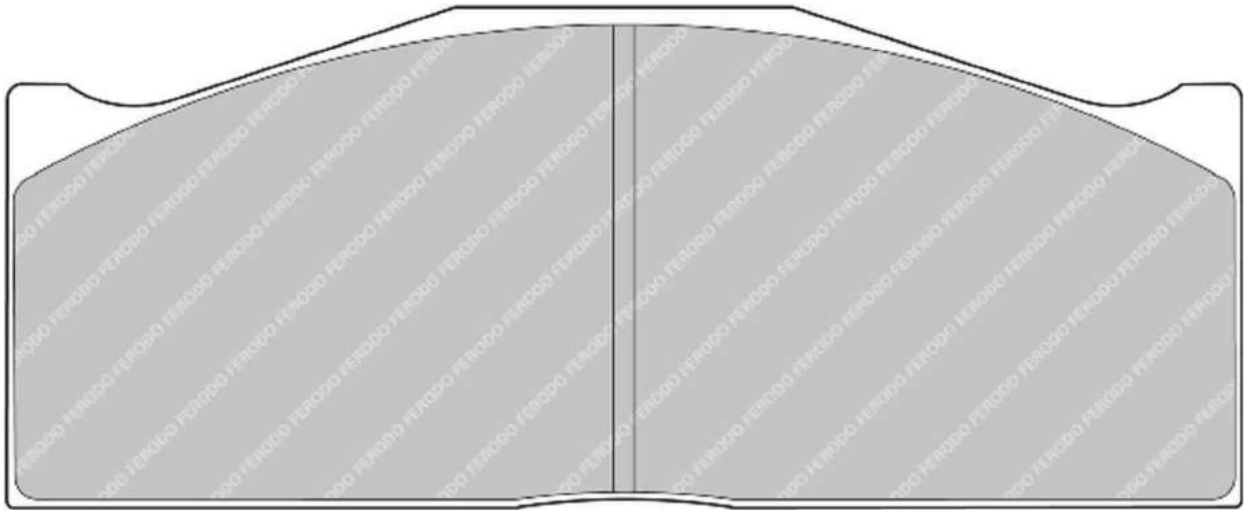

MATERIAL AVAILABILITY						
H	C	R	W	WB	Z	ZB
					✉	

CROSS REFERENCE	
AP RACING	5820
BREMBO	07.7614.2
BREMBO	07.7614.20
BREMBO	07.7614.21
FMSI	DR39
HAWK	HB331
PAGID	2016
PFC	7773.XX.30
Raybestos	DR600
Wilwood	8430

FERODO RACING

Updated on November 2020

Available
Out of Range
In Introduction
Exhausting
Make to order

FRP3042


131.8mm = 5.189"

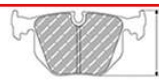
75.0mm = 2.953"


26.5mm = 1.043"


66.0mm = 2.598"

PORSCHE Front

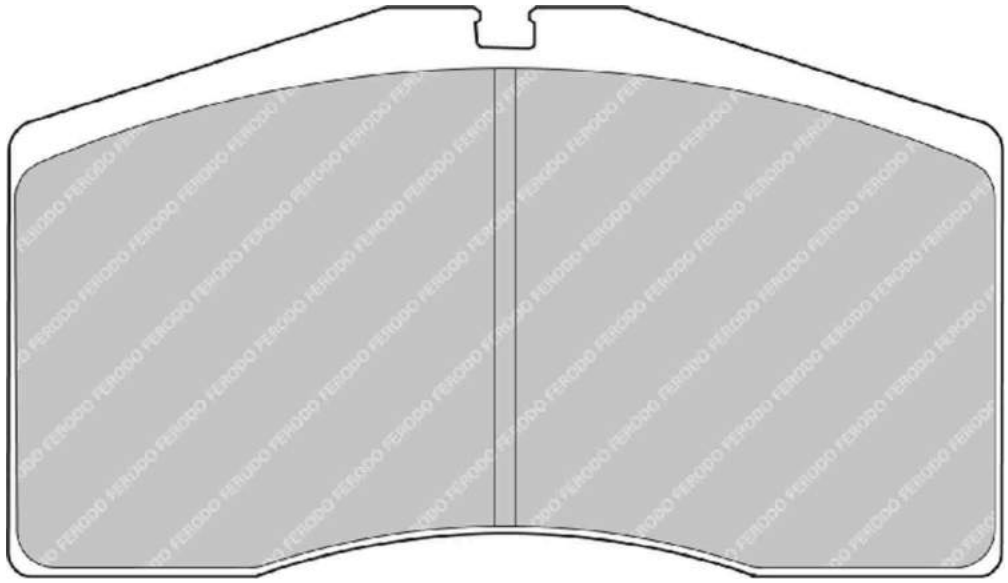

ALSO AVAILABLE		
SHAPE	TH. MM	NOTES
FCP891	17.5	

CROSS REFERENCE	
BREMBO	07.5308.9
BREMBO	07.5308.91
PAGID	1908
PAGID	2703

MATERIAL AVAILABILITY						
H	C	R	W	WB	Z	ZB
		✔	✔			

FRP3043


132.1mm = 5.201"

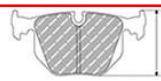
58.0mm = 2.283"


17.0mm = 0.669"


46.5mm = 1.831"

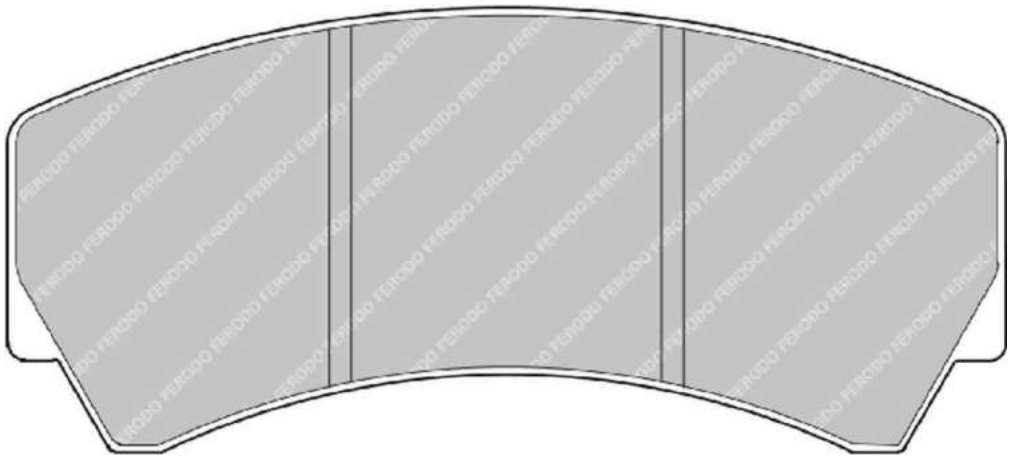

MATERIAL AVAILABILITY						
H	C	R	W	WB	Z	ZB
		✔			✉	

CROSS REFERENCE	
ALCON	PNF3430X275.4

✔ Available
✖ Out of Range
In Introduction
Exhausting
Make to order

FERODO RACING

FRP3044


51.1mm = 2.012"

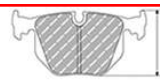
58.0mm = 2.283"


18.0mm = 0.709"


46.0mm = 1.811"



MATERIAL AVAILABILITY						
H	C	R	W	WB	Z	ZB
		✔			✉	

CROSS REFERENCE	
ALCON	PNF4493X603
ALCON	PNF4493X603.12
ALCON	PNF4493X603.4
ALCON	PNF4493X610.12
ALCON	PNF4493X610.4

FERODO RACING

Updated on November 2020

✔ Available
✖ Out of Range
In Introduction
Exhausting
Make to order

FRP3045


84.8mm = 3.339"

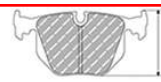
68.0mm = 2.677"


18.0mm = 0.709"


51.5mm = 2.028"

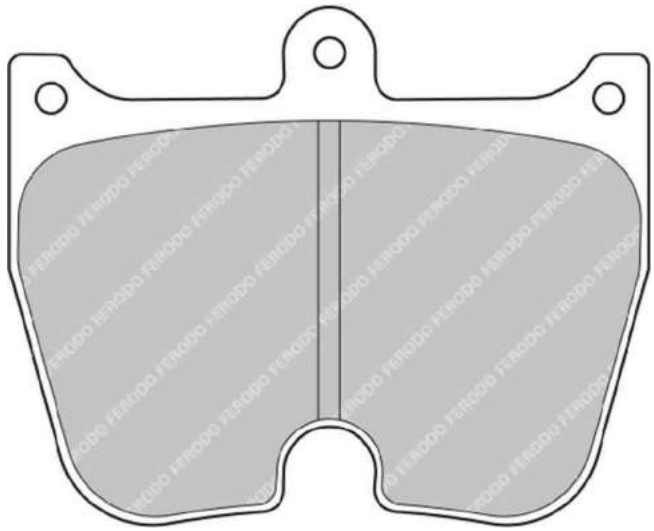

4 Pistons caliper **(1 set = 4 pads) - 2 sets per axle for the recommended applications**

ALSO AVAILABLE		
SHAPE	**TH. MM**	**NOTES**
FRP1059	**22**	
FRP3004	**20**	
FRP3034	**21**	

MATERIAL AVAILABILITY						
H	**C**	**R**	**W**	**WB**	**Z**	**ZB**

CROSS REFERENCE	
BREMBO	07.7810.3
BREMBO	07.7810.30
BREMBO	07.7810.31
PFC	7742.XX.18
PFC	7802.XX.18

FRP3046


163.9mm = 6.453"

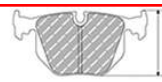
76.0mm = 2.992"


30.0mm = 1.181"


62.0mm = 2.441"

CHEVROLET Front

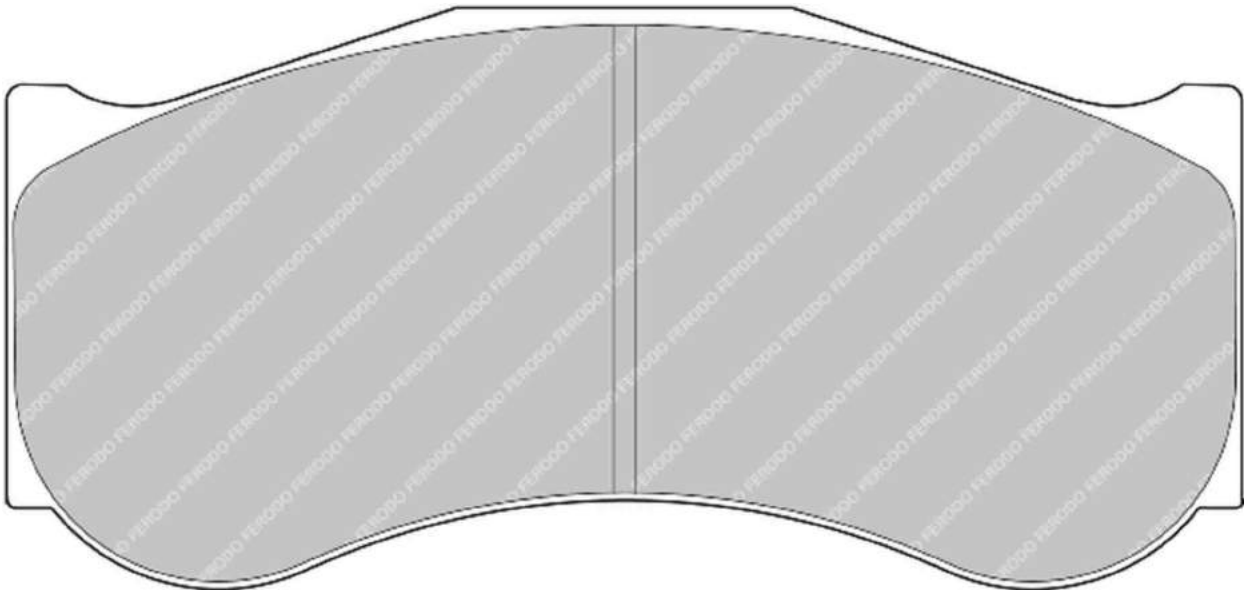

MATERIAL AVAILABILITY						
H	C	R	W	WB	Z	ZB
			✔			

CROSS REFERENCE	
BREMBO	07.7614.3
BREMBO	07.7614.30
BREMBO	07.7614.31
BREMBO	B2130
PAGID	2017

FERODO RACING

Updated on November 2020

Available
Out of Range
In Introduction
Exhausting
Make to order

FRP3050

WVA No: 23139 17,00


140.0mm = 5.512"

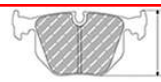
88.0mm = 3.465"


17.0mm = 0.669"


61.6mm = 2.425"

PORSCHE Front

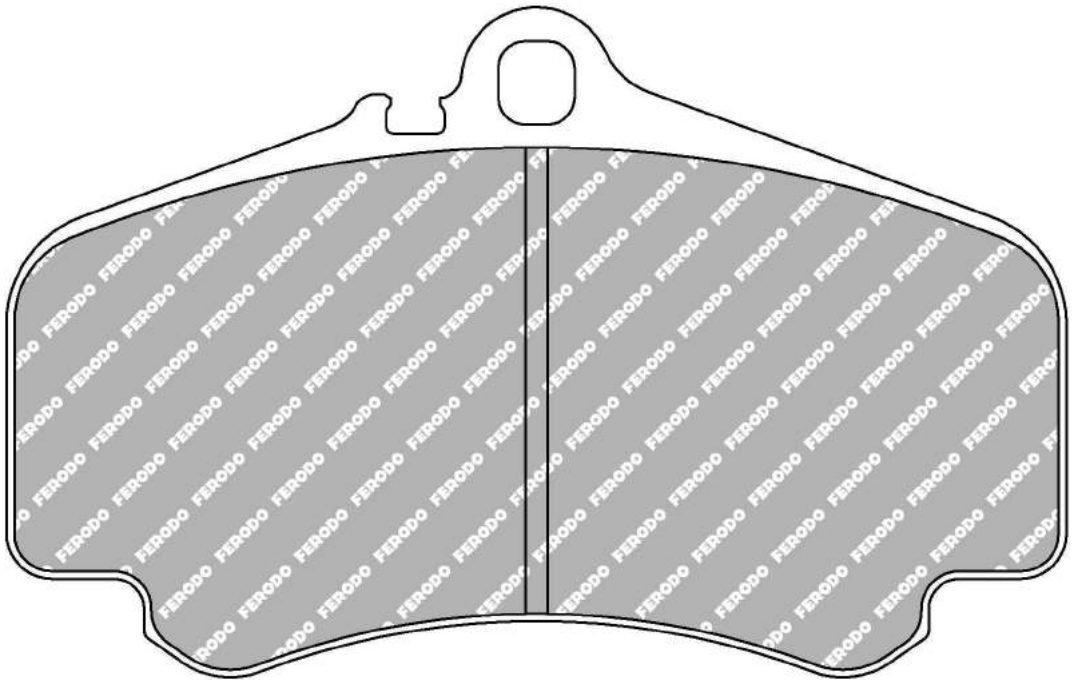

MATERIAL AVAILABILITY						
H	C	R	W	WB	Z	ZB
✔		✔	✔			

CROSS REFERENCE	
MINTEX	MDB2039
PAGID	2474
PAGID	T1291
PFC	7818.XX.17
WVA	23139 17,00

FRP3051

WVA No: 23329
FMSI No: D776


121.0mm = 4.764"

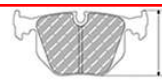
85.0mm = 3.346"


16.8mm = 0.661"


59.0mm = 2.323"

PORSCHE Front / Rear

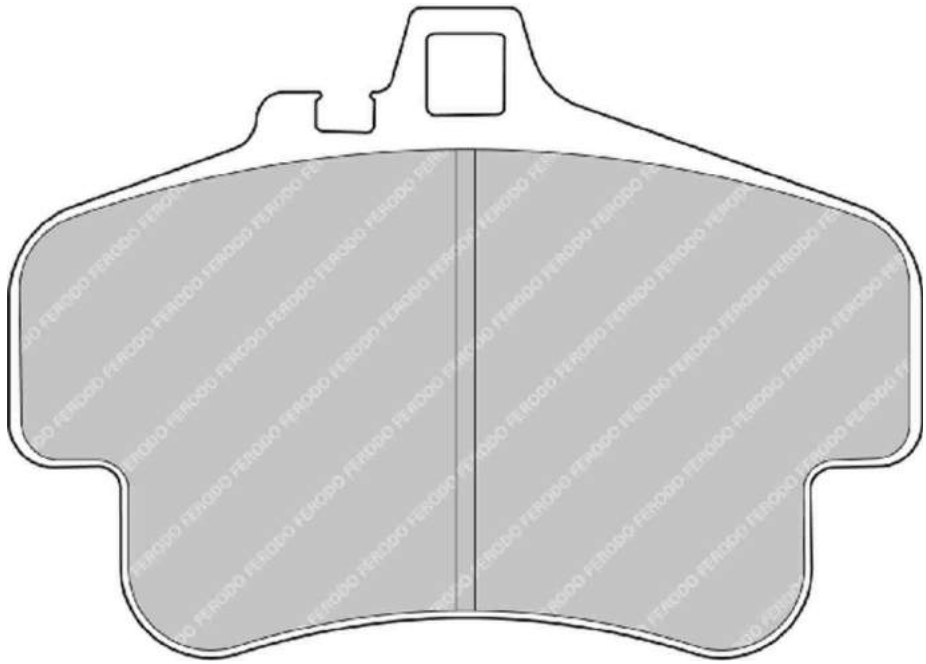

MATERIAL AVAILABILITY						
H	C	R	W	WB	Z	ZB
✔		✔	✔			

CROSS REFERENCE	
FMSI	D776
HAWK	HB291 0,642
MINTEX	MDB2417
MINTEX	MDB2842
PAGID	2405
PAGID	8236
PAGID	T1231
PAGID	T1635
PAGID	T1799
PFC	0776
WVA	23329

FERODO RACING

Updated on November 2020

Available
Out of Range
In Introduction
Exhausting
Make to order

FRP3053


139.8mm = 5.504"

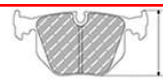
80.0mm = 3.150"


27.5mm = 1.083"


61.0mm = 2.402"

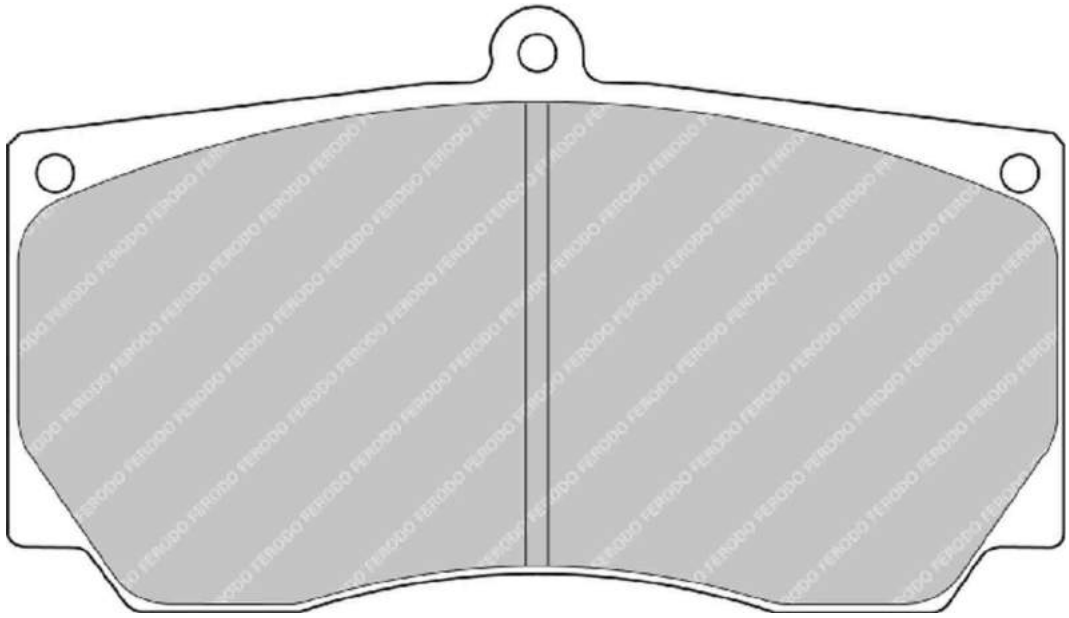

MATERIAL AVAILABILITY						
H	C	R	W	WB	Z	ZB
		✉	✔			

CROSS REFERENCE	
ALCON	0084
BREMBO	07.6955.3
BREMBO	07.6955.30
BREMBO	07.6955.31
BREMBO	B1926
HAWK	HB221
PFC	7775.XX.28
Raybestos	DR561
Wilwood	9828

✔ Available
✖ Out of Range
In Introduction
Exhausting
✉ Make to order

FERODO RACING

Updated on November 2020

FRP3054


152.0mm = 5.984"

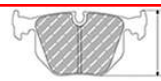
80.0mm = 3.150"


18.0mm = 0.709"


51.0mm = 2.008"

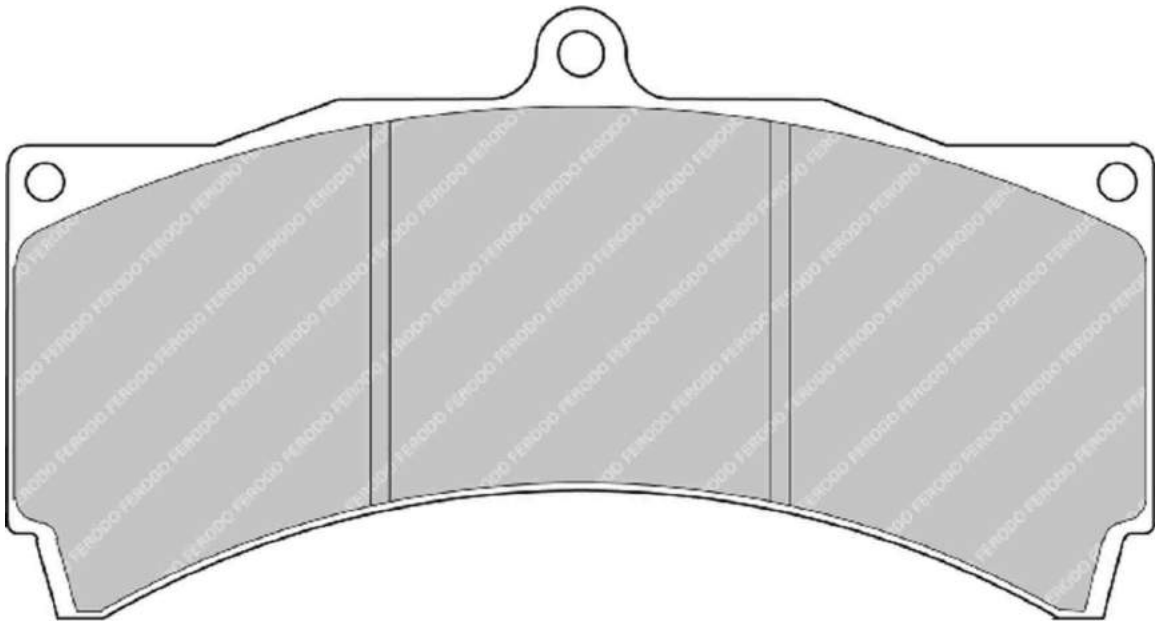

ALSO AVAILABLE		
SHAPE	TH. MM	NOTES
FRP3061	25	
FRP3076	17	

MATERIAL AVAILABILITY						
H	C	R	W	WB	Z	ZB
✔		✔	✔		✔	

CROSS REFERENCE	
ALCON	PNF4489X545.4
AP RACING	CP3894D51 (18 mm)
PAGID	1903
PFC	7793.XX.18

FERODO RACING

Updated on November 2020

Available
Out of Range
In Introduction
Exhausting
Make to order

FRP3055


163.1mm = 6.421"

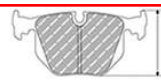
69.0mm = 2.717"


30.0mm = 1.181"


54.0mm = 2.126"

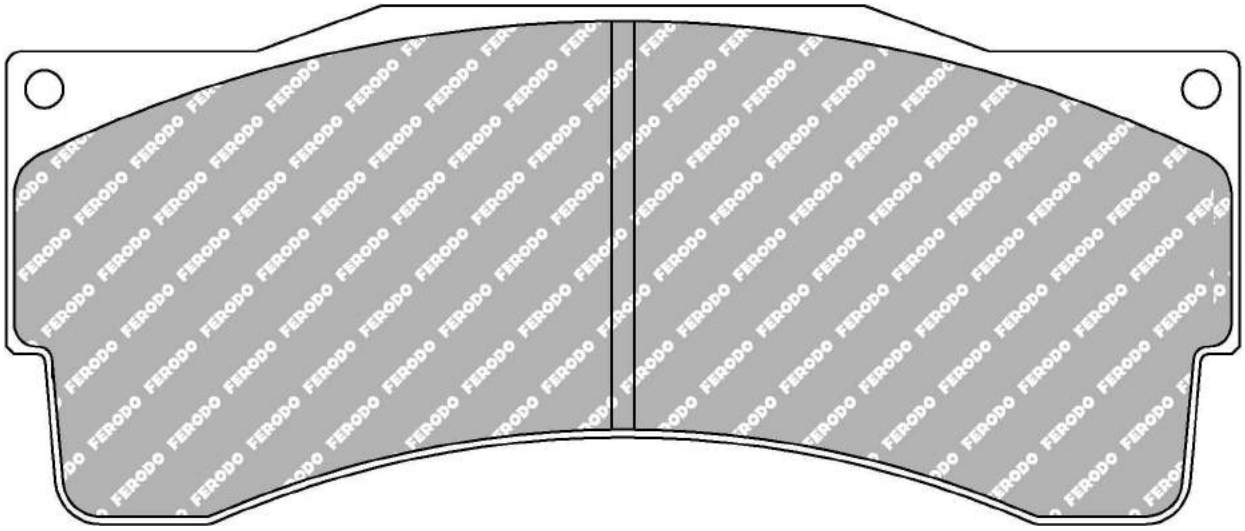

ALSO AVAILABLE		
SHAPE	TH. MM	NOTES
FRP3037	28	
FRP3039	25	

MATERIAL AVAILABILITY						
H	C	R	W	WB	Z	ZB
			✔		✘	✔

CROSS REFERENCE	
ALCON	PNF4495X517.4
ALCON	PNF4495X518.4
AP RACING	CP6210D54 (30 mm)
BREMBO	B5530
PAGID	2558
PAGID	2559
PFC	7778.XX.30

FRP3056


77.6mm = 3.055"

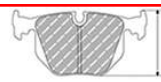
66.0mm = 2.598"


14.5mm = 0.571"


50.1mm = 1.972"

LOTUS Front, RENAULT Rear

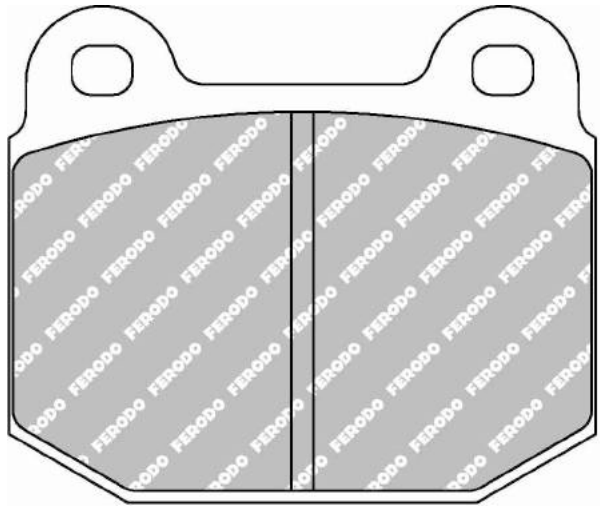

ALSO AVAILABLE		
SHAPE	**TH. MM**	**NOTES**
FCP116	**16.5**	
FCP1562		**different friction area**

CROSS REFERENCE	
AP RACING	CP5119D50
PFC	0109-07-16-44

MATERIAL AVAILABILITY						
H	**C**	**R**	**W**	**WB**	**Z**	**ZB**
✔	✔	✔			✉	

FERODO RACING

Updated on November 2020

Available
Out of Range
In Introduction
Exhausting
Make to order

FRP3057

FMSI No: D052



183.2mm = 7.213"
197.3mm = 7.768"

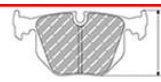

66.0mm = 2.598"
59.0mm = 2.323"



16.0mm = 0.630"
13.6mm = 0.535"



46.0mm = 1.811"
46.0mm = 1.811"

BUICK Front / Rear, CADILLAC Front, CHEVROLET Front, JEEP Front, OLDSMOBILE Front, PONTIAC Front

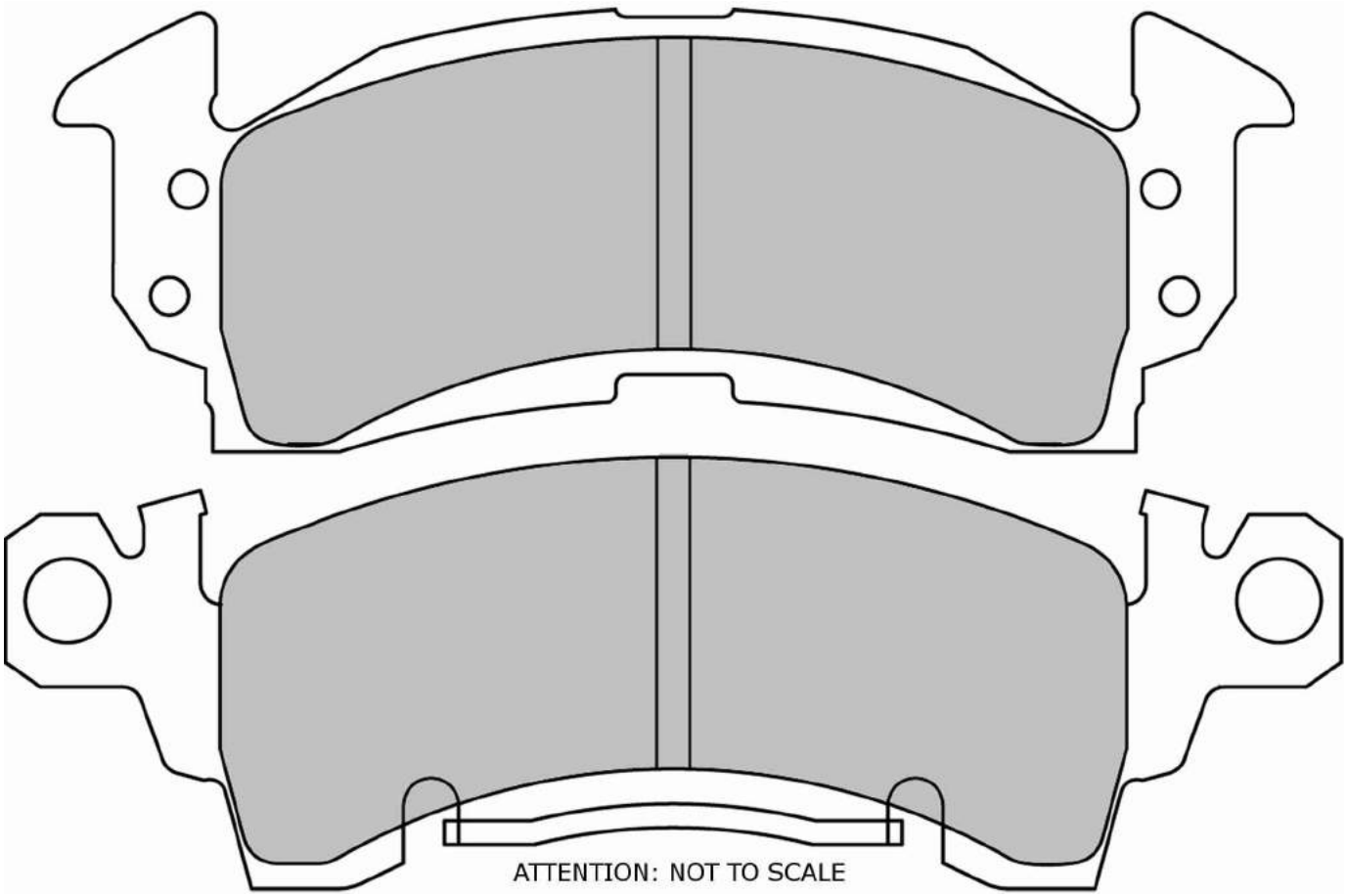

MATERIAL AVAILABILITY						
H	C	R	W	WB	Z	ZB
✔		✉	✔		✔	

CROSS REFERENCE	
FMSI	D052
FMSI	D313
FMSI	D52
HAWK	HB103 0,59
MINTEX	MTX1594
PAGID	1594USA
PFC	0052.XX
Raybestos	DR52

✔ Available
✖ Out of Range
In Introduction
Exhausting
Make to order

FERODO RACING

Updated on November 2020

FRP3058

FMSI No: D154



152.0mm = 5.984"
123.1mm = 4.846"

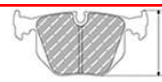

73.0mm = 2.874"
66.0mm = 2.598"



16.0mm = 0.630"
14.0mm = 0.551"



41.2mm = 1.622"
41.2mm = 1.622"

CHEVROLET Front / Rear, PONTIAC Front / Rear

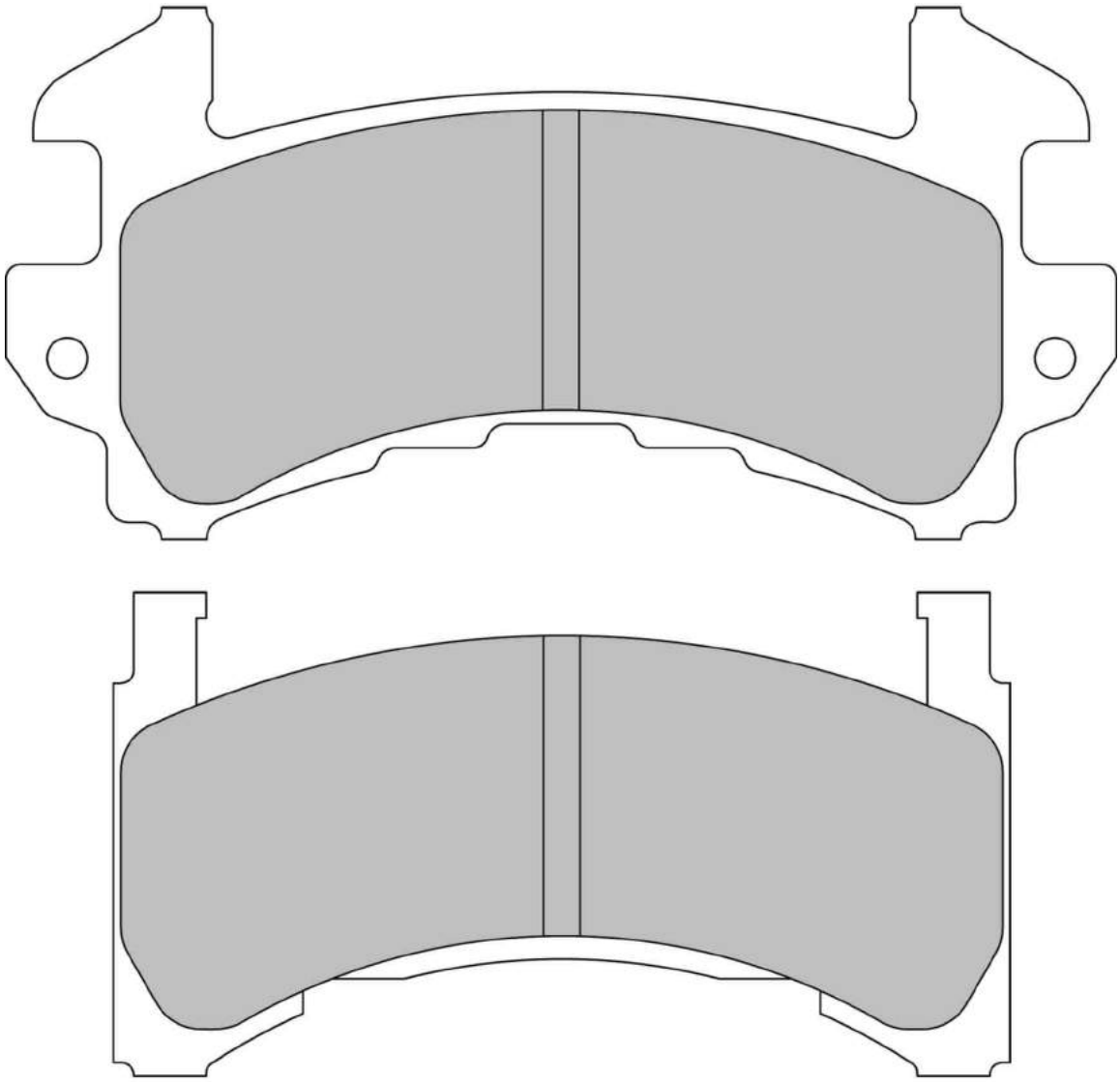

MATERIAL AVAILABILITY						
H	C	R	W	WB	Z	ZB
✗		✓	⚠		✉	

CROSS REFERENCE	
FMSI	D154
FMSI	D202
HAWK	HB119 0,594
MINTEX	MTX1595
PAGID	1595USA
PFC	0154.XX
Raybestos	DR154
SBS	3030
Wilwood	D154

FERODO RACING

Updated on November 2020

✓ Available
✗ Out of Range
In Introduction
⚠ Exhausting
✉ Make to order

FRP3059



130.0mm = 5.118" 82.0mm = 3.228" 28.0mm = 1.102" 66.0mm = 2.598"

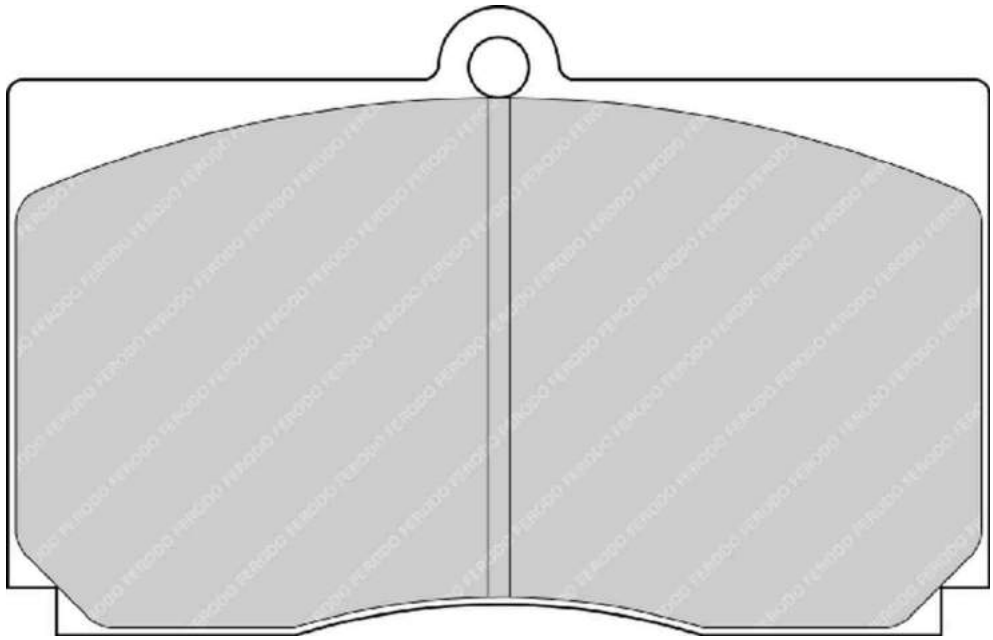

MATERIAL AVAILABILITY						
H	C	R	W	WB	Z	ZB
		✔	✖			

CROSS REFERENCE	
AP RACING	CP2749D66 (28 mm)
HAWK	HB106
HAWK	HB224
MINTEX	1247
PAGID	1218
PFC	7702
Raybestos	DR500
Wilwood	9425
Wilwood	9428

FRP3060



130.0mm = 5.118" 83.0mm = 3.268" 28.0mm = 1.102" 54.0mm = 2.126"

FMSI No: DR19

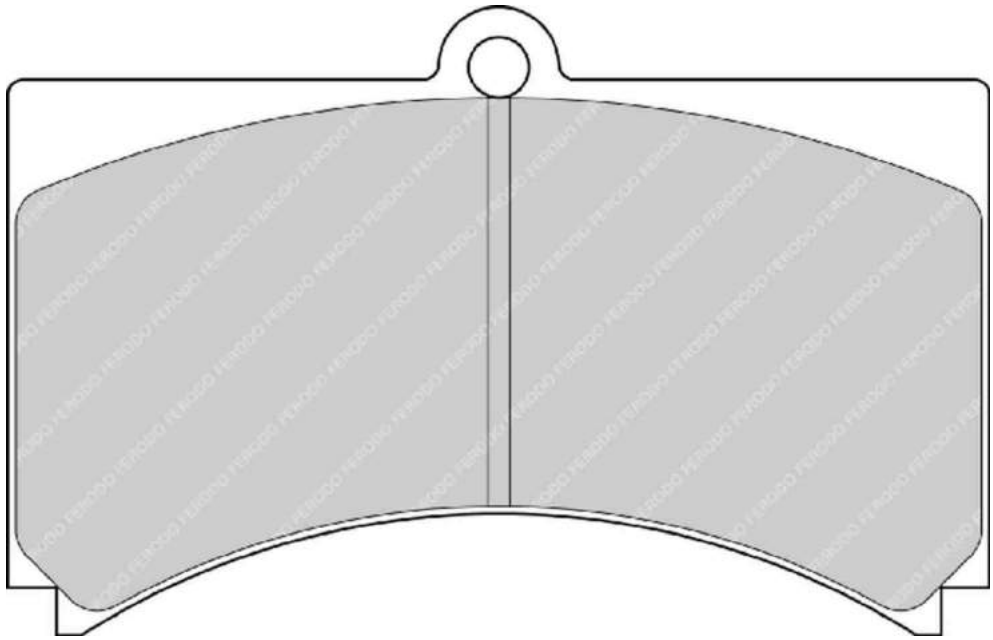

MATERIAL AVAILABILITY						
H	C	R	W	WB	Z	ZB
		✖	✔			

CROSS REFERENCE	
AP RACING	CP2749D55 (28 mm)
FMSI	DR19
HAWK	HB224
PFC	7712
Raybestos	DR501
Wilwood	9525
Wilwood	9528

FERODO RACING

Updated on November 2020

✔ Available ✖ Out of Range In Introduction Exhausting Make to order

FRP3061


152.0mm = 5.984"

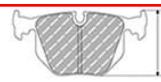
80.0mm = 3.150"


25.0mm = 0.984"


51.0mm = 2.008"

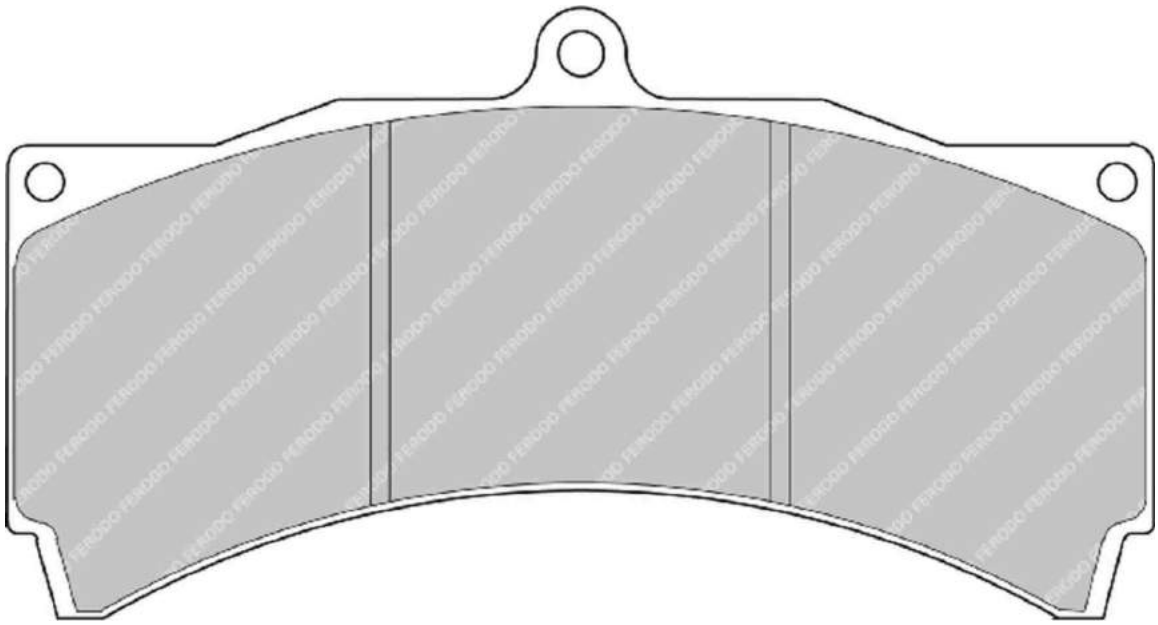

ALSO AVAILABLE		
SHAPE	TH. MM	NOTES
FRP3054	18	
FRP3076	17	

CROSS REFERENCE	
AP RACING	CP3558D51
PAGID	1538
PFC	7790.XX.25

MATERIAL AVAILABILITY						
H	C	R	W	WB	Z	ZB
		✉	✉		✔	

✔ Available
✖ Out of Range
In Introduction
Exhausting
✉ Make to order

FERODO RACING

Updated on November 2020

FRP3062


148.8mm = 5.858"

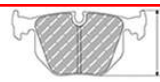
57.0mm = 2.244"


19.5mm = 0.768"


50.5mm = 1.988"

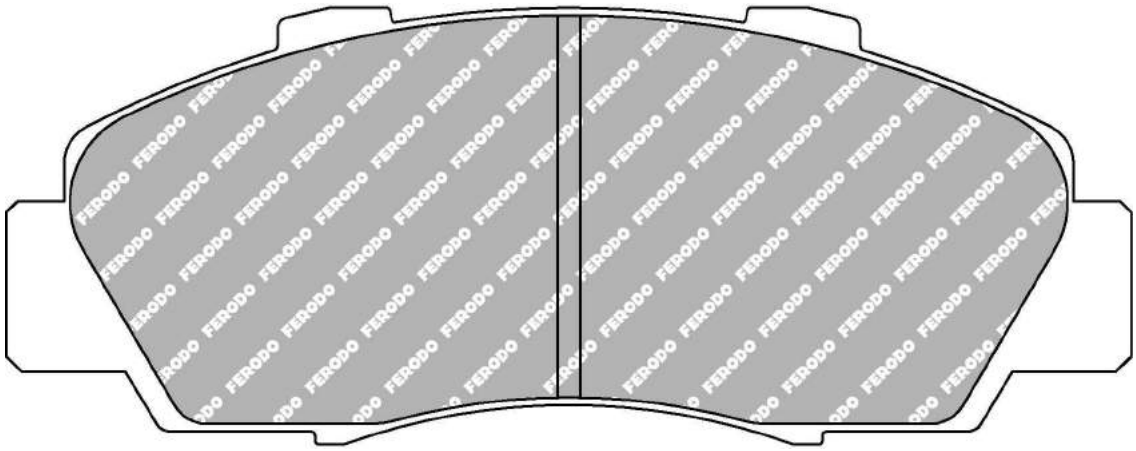

ALSO AVAILABLE		
SHAPE	TH. MM	NOTES
FCP905	18.5	

MATERIAL AVAILABILITY						
H	C	R	W	WB	Z	ZB

FERODO RACING

Updated on November 2020

Available
Out of Range
In Introduction
Exhausting
Make to order

FRP3067

WVA No: 23092 15,00
FMSI No: D1001


131.8mm = 5.189"

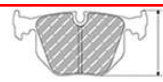
77.0mm = 3.031"


14.7mm = 0.579"


62.0mm = 2.441"

ALFA ROMEO Front, ASTON MARTIN Front, HONDA Front, SUBARU Front, TESLA Front

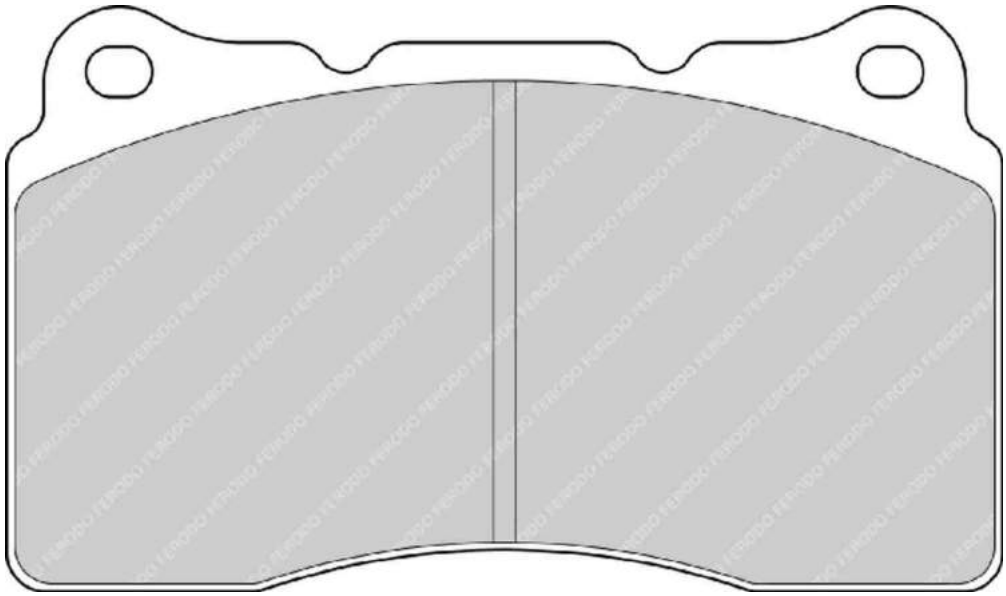

ALSO AVAILABLE		
SHAPE	TH. MM	NOTES
FCP1334	16	

MATERIAL AVAILABILITY						
H	C	R	W	WB	Z	ZB
✔		✔	✔		✉	

CROSS REFERENCE	
ALCON	PNF0084X336.4
BREMBO	07.8301.84
BREMBO	07.8715.36
BREMBO	B6215
FMSI	D1001
HAWK	HB453 0,585
MINTEX	MDB2592
PAGID	T1830
PFC	7781
Raybestos	DR1001
WVA	23092 15,00

FRP3069


97.9mm = 3.854"


65.0mm = 2.559"


16.0mm = 0.630"


50.8mm = 2.000"

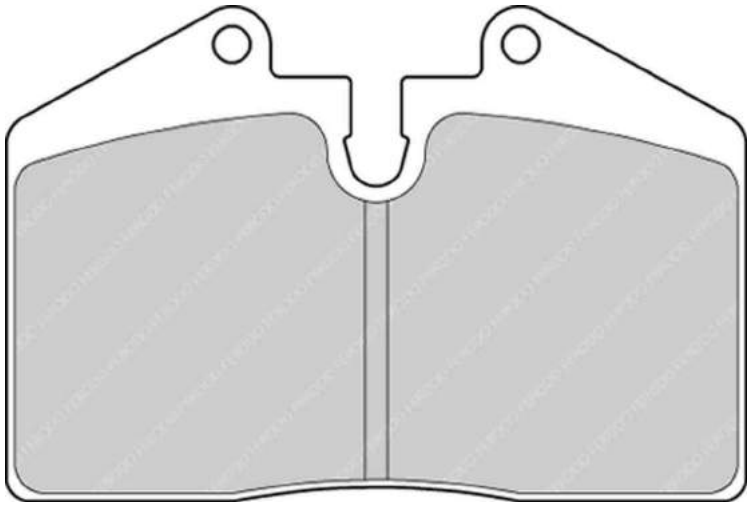

ALSO AVAILABLE		
SHAPE	TH. MM	NOTES
FCP451	18	

CROSS REFERENCE	
ALCON	PNF4436X509
ALCON	PNF4436X509.4
PAGID	8009

MATERIAL AVAILABILITY						
H	C	R	W	WB	Z	ZB
✓		✓	✉		✉	

FERODO RACING

Updated on November 2020

Available
Out of Range
In Introduction
Exhausting
Make to order

FRP3070


132.0mm = 5.197"


61.0mm = 2.402"


18.0mm = 0.709"


42.5mm = 1.673"

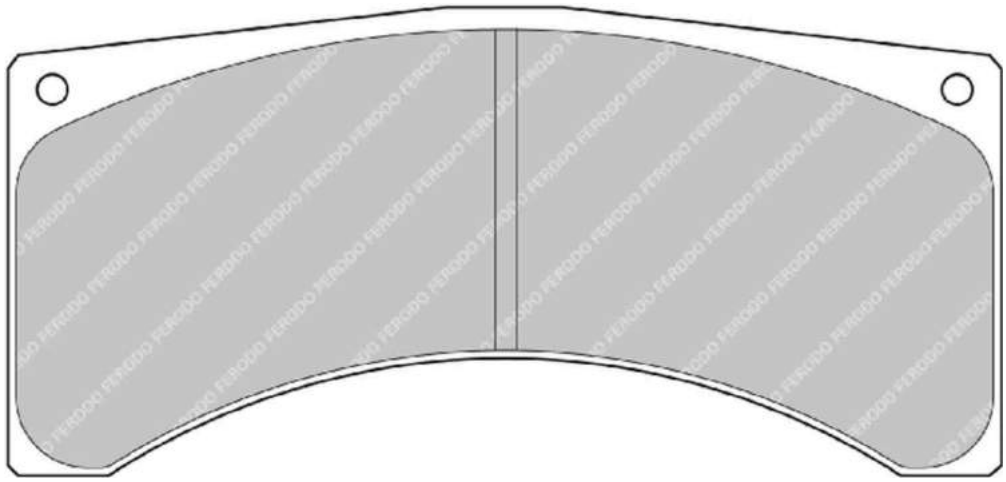

ALSO AVAILABLE		
SHAPE	TH. MM	NOTES
FRP3032	16	

MATERIAL AVAILABILITY						
H	C	R	W	WB	Z	ZB
		✔	✔		✉	

CROSS REFERENCE	
BREMBO	07.7869.12
HAWK	HB105
PFC	7718.XX.18
Raybestos	DR2001

FRP3071


100.0mm = 3.937"

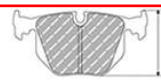
46.0mm = 1.811"


16.0mm = 0.630"

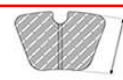
37.0mm = 1.457"

FMSI No: DR23

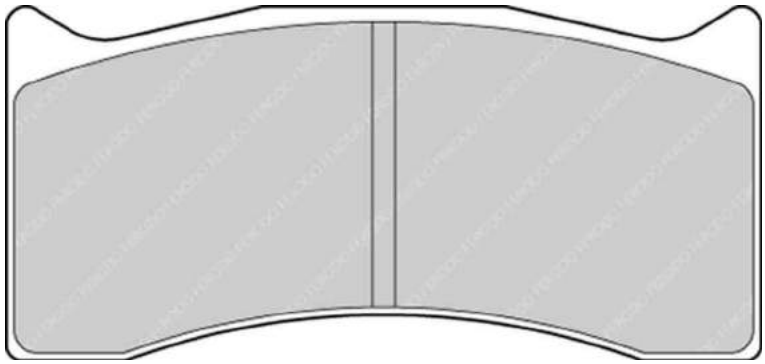

MATERIAL AVAILABILITY						
H	C	R	W	WB	Z	ZB
✉	✔	✔	✔		✔	

CROSS REFERENCE	
BREMBO	B0816
FMSI	DR23
HAWK	HB351
PAGID	8000
PFC	7736
Raybestos	DR736

✔ Available
✖ Out of Range
In Introduction
⚠ Exhausting
✉ Make to order

FERODO RACING

FRP3073


132.4mm = 5.213"


55.0mm = 2.165"


20.3mm = 0.799"


42.0mm = 1.654"

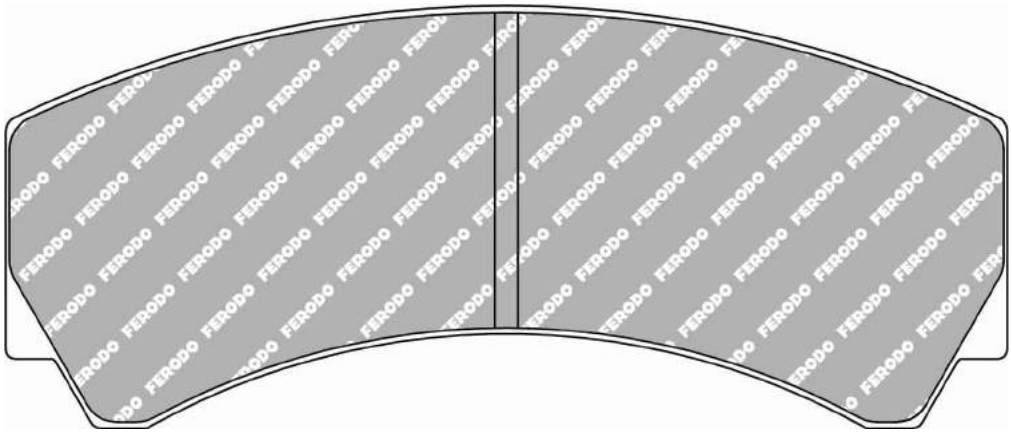

ALSO AVAILABLE		
SHAPE	TH. MM	NOTES
FRP3018	16.7	

CROSS REFERENCE	
AP RACING	CP2279D42
PFC	7768.XX.20

MATERIAL AVAILABILITY						
H	C	R	W	WB	Z	ZB
		✔				

FRP3074


58.1mm = 2.287"

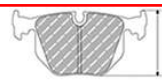
59.0mm = 2.323"


18.0mm = 0.709"


47.9mm = 1.886"



MATERIAL AVAILABILITY						
H	C	R	W	WB	Z	ZB
		✔				

CROSS REFERENCE	
PFC	7746
PFC	7750.XX.20

FERODO RACING

Updated on November 2020

✔ Available
✖ Out of Range
In Introduction
Exhausting
Make to order

FRP3075

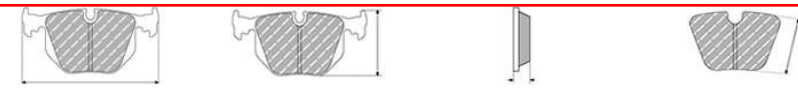

FMSI No: D991

PORSCHE Front

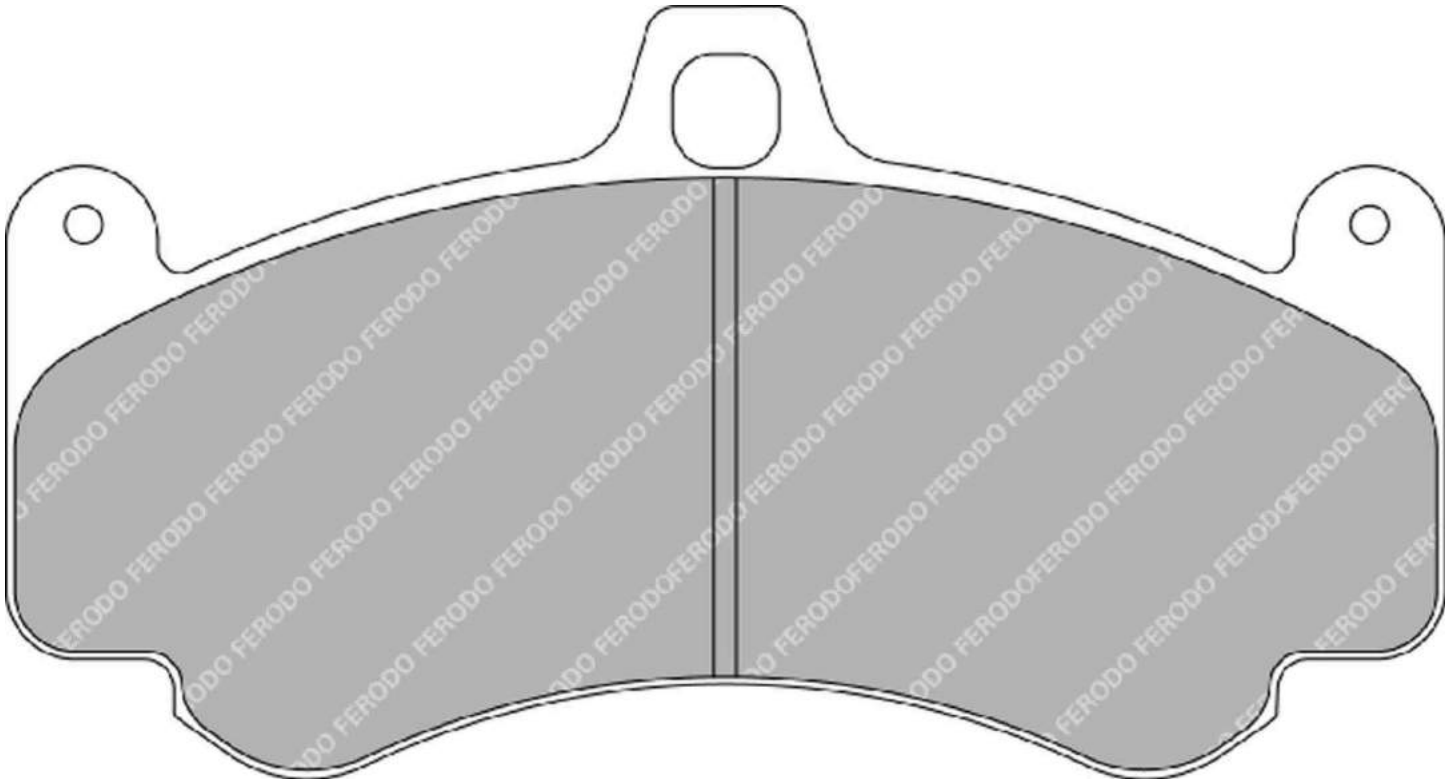

ALSO AVAILABLE		
SHAPE	TH. MM	NOTES
FRP3096	19	

MATERIAL AVAILABILITY						
H	C	R	W	WB	Z	ZB
✔			✔		✖	✉

CROSS REFERENCE	
FMSI	D991
HAWK	HB483 0,635
MINTEX	MDB3033
PAGID	2707
PAGID	8003
PAGID	T1857
PFC	7819

✔ Available ⚠ Exhausting
✖ Out of Range ✉ Make to order
In Introduction

FERODO RACING

Updated on November 2020

FRP3076


152.0mm = 5.984"

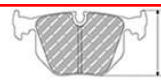
80.0mm = 3.150"


17.0mm = 0.669"


50.0mm = 1.969"

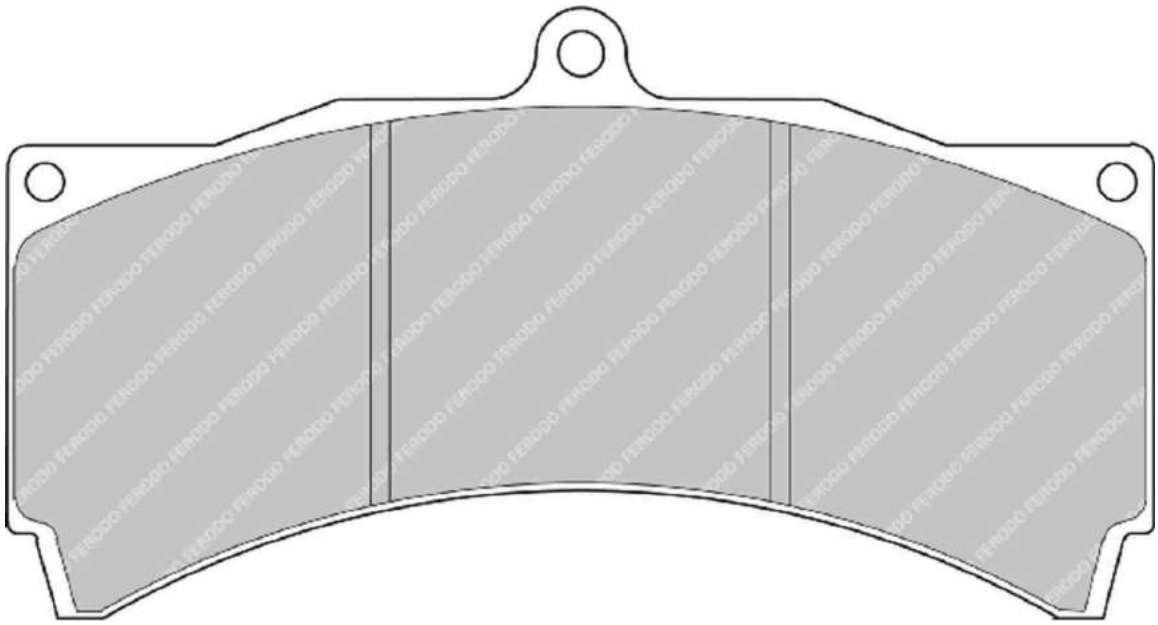

ALSO AVAILABLE		
SHAPE	TH. MM	NOTES
FRP3054	18	
FRP3061	25	

CROSS REFERENCE	
AP RACING	CP5070D51
PAGID	8018

MATERIAL AVAILABILITY						
H	C	R	W	WB	Z	ZB
✔		✔			✉	

FERODO RACING

Updated on November 2020

Available
Out of Range
In Introduction
Exhausting
Make to order

FRP3077


152.1mm = 5.988"

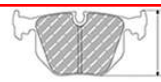
80.0mm = 3.150"


17.0mm = 0.669"


54.0mm = 2.126"

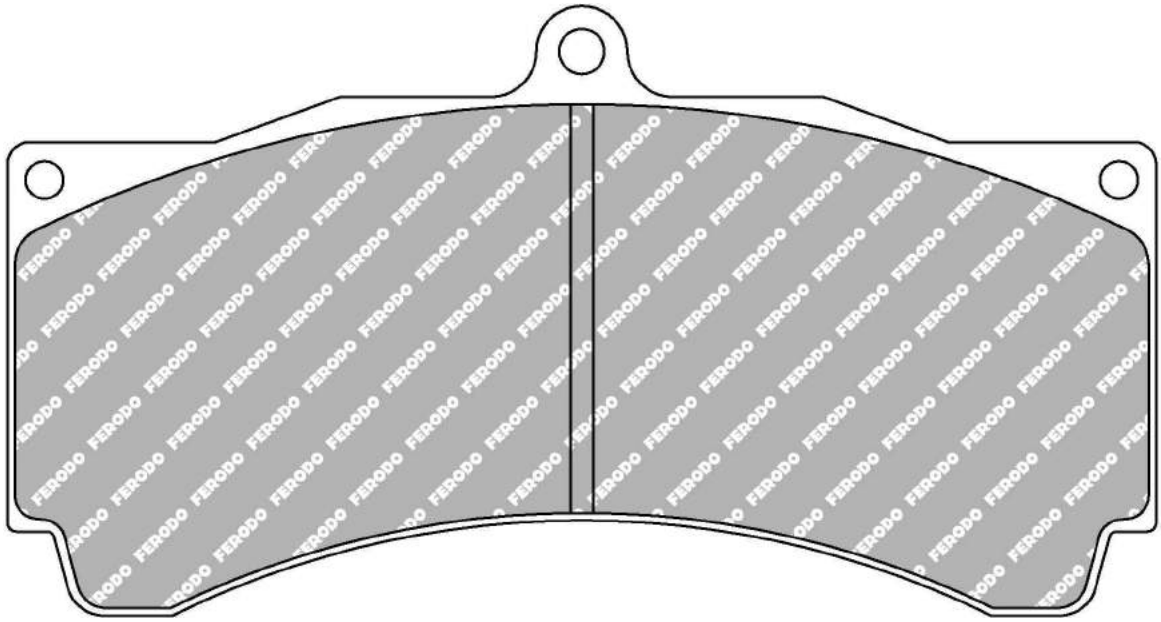

ALSO AVAILABLE		
SHAPE	TH. MM	NOTES
FRP3003	18	with top tab
FRP3014	25	without top tab
FRP3015	28.5	without top tab
FRP3144	18	without top tab
FRP3145	17	without top tab

CROSS REFERENCE	
AP RACING	CP5070D54
PFC	7790.XX.17

MATERIAL AVAILABILITY						
H	C	R	W	WB	Z	ZB
✔		✔	✔		✖	

✔ Available
✖ Out of Range
In Introduction
Exhausting
Make to order

FERODO RACING

Updated on November 2020

FRP3078


149.2mm = 5.874"

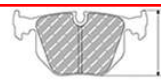
75.0mm = 2.953"


18.0mm = 0.709"


58.5mm = 2.303"

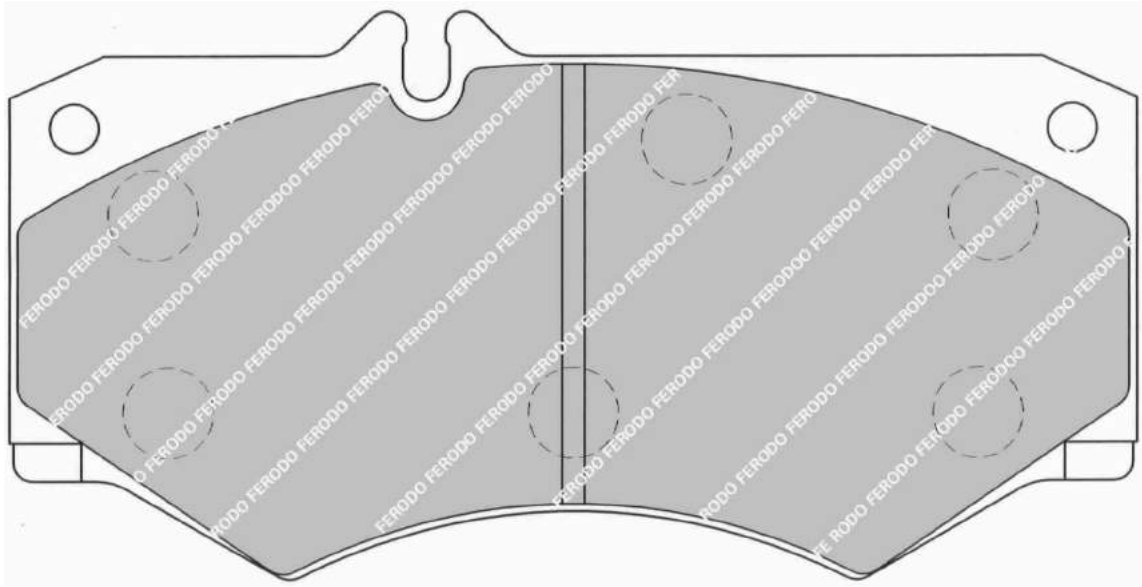

MATERIAL AVAILABILITY						
H	C	R	W	WB	Z	ZB
✉		✔			✉	

CROSS REFERENCE	
EBC	DP4413R
TAROX	SP0239

FERODO RACING

Updated on November 2020

✔ Available
✖ Out of Range
In Introduction
Exhausting
Make to order

FRP3080


164.0mm = 6.457"

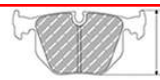
66.0mm = 2.598"


27.8mm = 1.094"


50.5mm = 1.988"

FMSI No: DR87

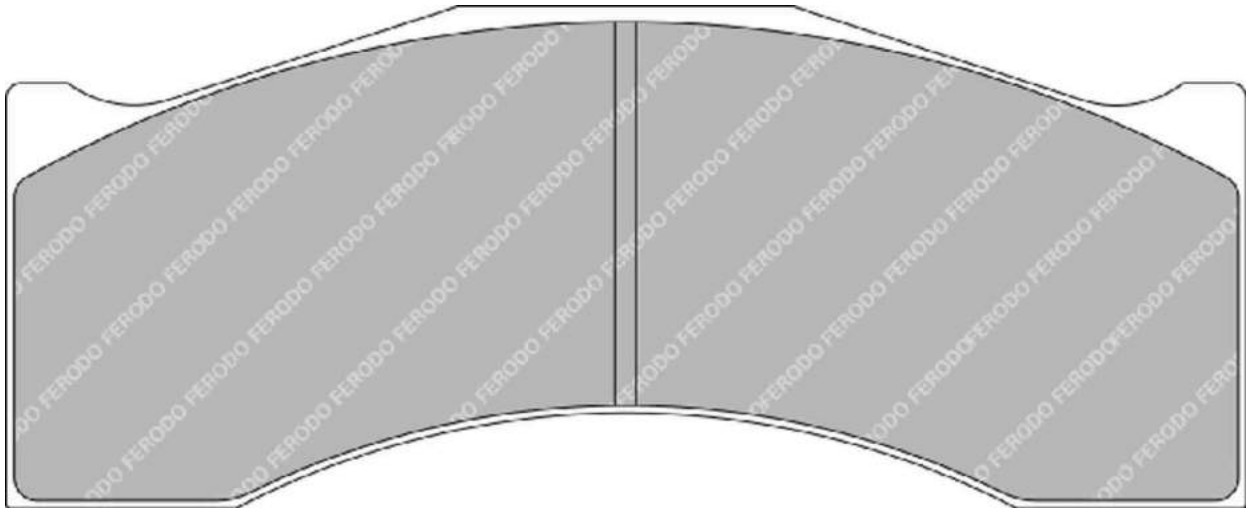

ALSO AVAILABLE		
SHAPE	TH. MM	NOTES
FRP3157	18	

MATERIAL AVAILABILITY						
H	C	R	W	WB	Z	ZB
		✔	✔		✔	

CROSS REFERENCE	
BREMBO	B2230
FMSI	DR87
Raybestos	DR605

FRP3081


152.0mm = 5.984"

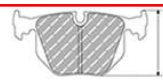
63.0mm = 2.480"


16.0mm = 0.630"


51.0mm = 2.008"

MITSUBISHI Front

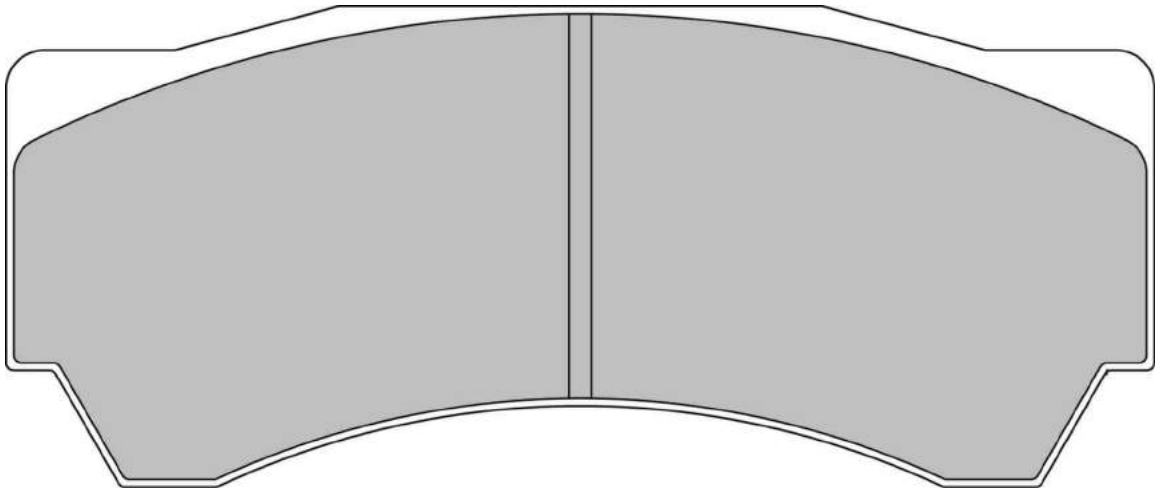

ALSO AVAILABLE		
SHAPE	TH. MM	NOTES
FRP3142		For Alcon Kits with caliper pin guides

CROSS REFERENCE	
ALCON	PNF4497X607.4
ALCON	PNF4497X617.4

MATERIAL AVAILABILITY						
H	C	R	W	WB	Z	ZB
✔		✔	✉		✉	

FRP3082


132.0mm = 5.197"

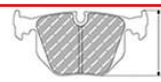
61.0mm = 2.402"


15.0mm = 0.591"


49.0mm = 1.929"

MITSUBISHI Rear

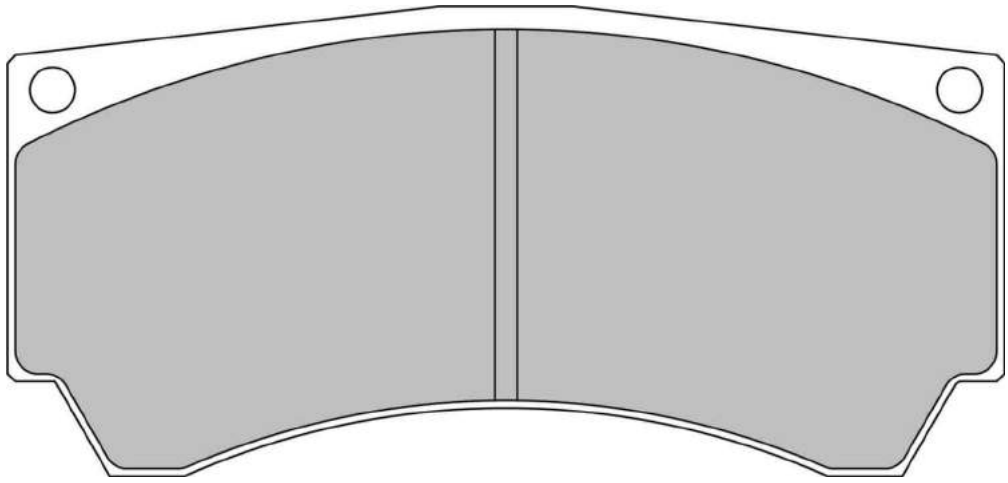

MATERIAL AVAILABILITY						
H	C	R	W	WB	Z	ZB
✔		✔	✉		✉	

CROSS REFERENCE	
ALCON	PNF4498X703.4
ALCON	PNF4498X705.4
PAGID	8050

FERODO RACING

Updated on November 2020

✔ Available ⚠ Exhausting
✖ Out of Range ✉ Make to order
In Introduction

FRP3083

WVA No: 24974 16,70 - 20345 16,90



130.3mm = 5.130" 81.0mm = 3.189" 16.9mm = 0.665" 55.0mm = 2.165"

LOTUS Front / Rear, MCLAREN Rear, RENAULT Front, SEAT Front

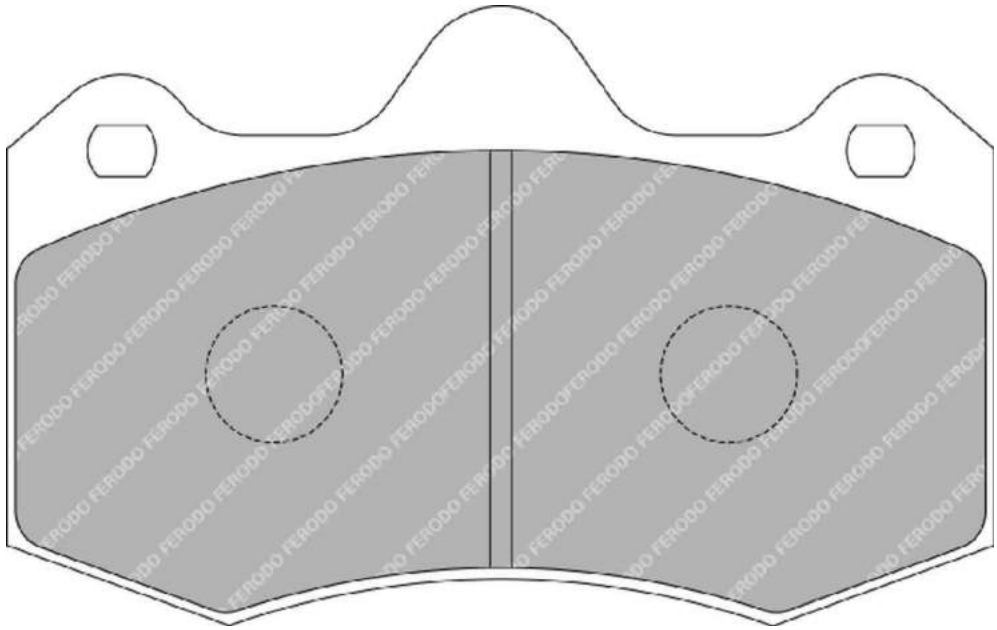

ALSO AVAILABLE		
SHAPE	TH. MM	NOTES
FRP3107	no	D50

MATERIAL AVAILABILITY						
H	C	R	W	WB	Z	ZB
✔		✔	✔		✔	

CROSS REFERENCE	
AP RACING	CP6600D55
ENDLESS	RCP100
PAGID	20345
PAGID	4345
WVA	24974 16,70 - 20345 16,90

FRP3084


149.3mm = 5.878"

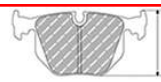
86.0mm = 3.386"


16.9mm = 0.665"


57.5mm = 2.264"

ASTON MARTIN Front, KIA Front, MCLAREN Front, SEAT Front

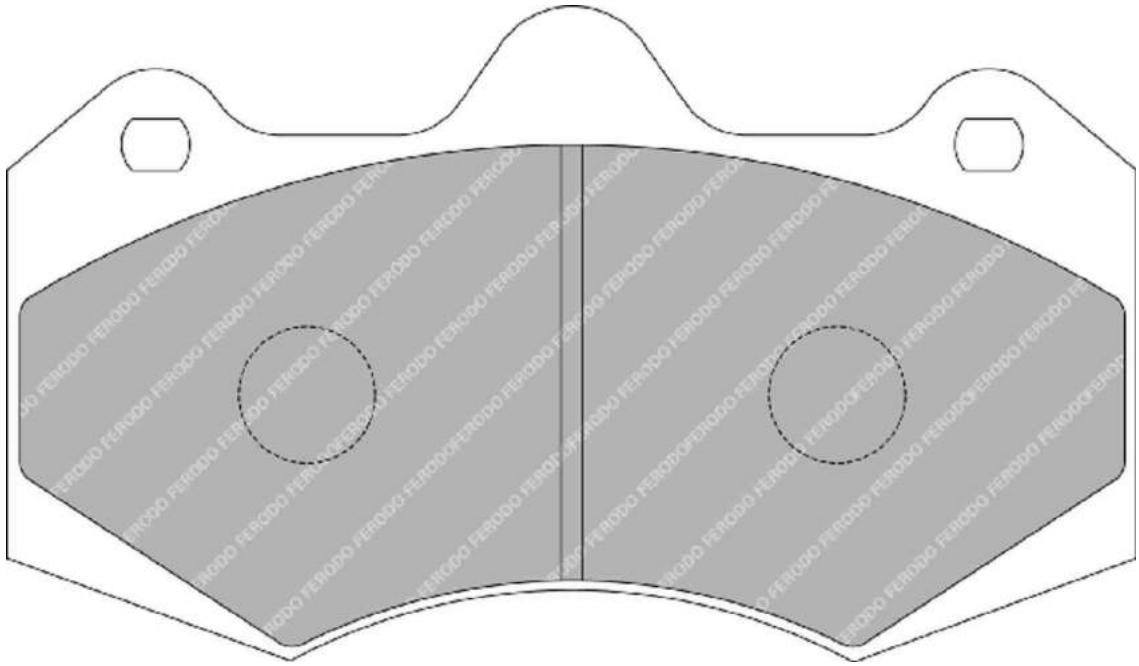

MATERIAL AVAILABILITY						
H	C	R	W	WB	Z	ZB
✔		✔	✔		✔	✉

CROSS REFERENCE	
AP RACING	CP7040D61
PAGID	20346
PAGID	4346
PAGID	4346

FERODO RACING

Updated on November 2020

✔ Available
✖ Out of Range
In Introduction
Exhausting
Make to order

FRP3085


113.8mm = 4.480"


59.0mm = 2.323"


16.2mm = 0.638"


46.1mm = 1.815"

LOTUS Front, MG Front

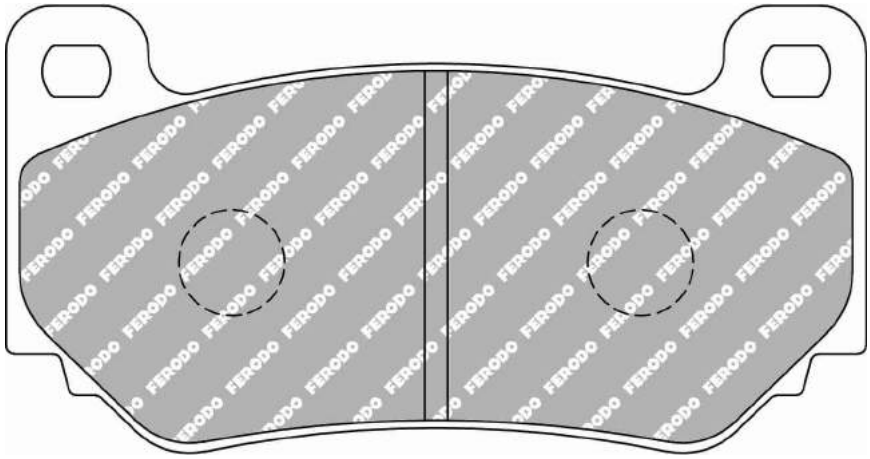

ALSO AVAILABLE		
SHAPE	TH. MM	NOTES
FCP4972	14.5	

CROSS REFERENCE	
AP RACING	CP7600D46
PAGID	20349
PAGID	4349

MATERIAL AVAILABILITY						
H	C	R	W	WB	Z	ZB
✔		✔	✔		✔	

FRP3086


86.2mm = 3.394"

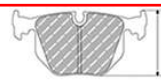
63.0mm = 2.480"


18.0mm = 0.709"


46.0mm = 1.811"

FMSI No: DR73

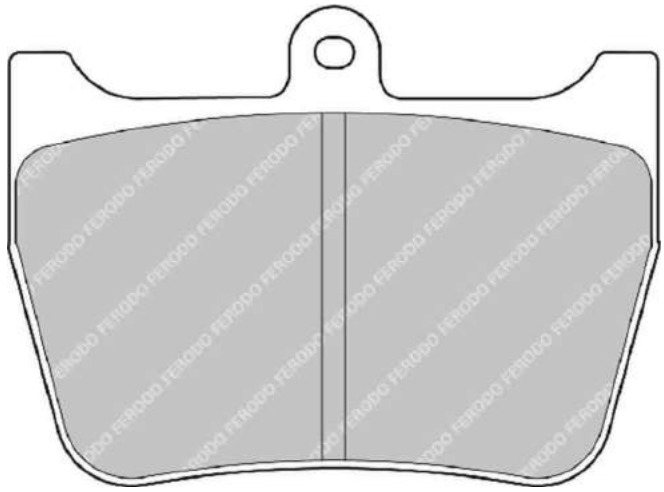

4 Pistons caliper (1 set = 4 pads) - 2 sets per axle for the recommended applications

ALSO AVAILABLE		
SHAPE	TH. MM	NOTES
FRP3020	15	

CROSS REFERENCE	
AP RACING	CP4848D46 (18 mm)
AP RACING	CP5148DXX
FMSI	DR73
PFC	7804.XX.18
Raybestos	DR806

MATERIAL AVAILABILITY						
H	C	R	W	WB	Z	ZB
		✔				

✔ Available
✖ Out of Range
In Introduction
Exhausting
Make to order

FERODO RACING

FRP3087


139.8mm = 5.504"

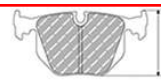
61.4mm = 2.417"


17.5mm = 0.689"


48.4mm = 1.906"

FORD Front / Rear, MITSUBISHI Front

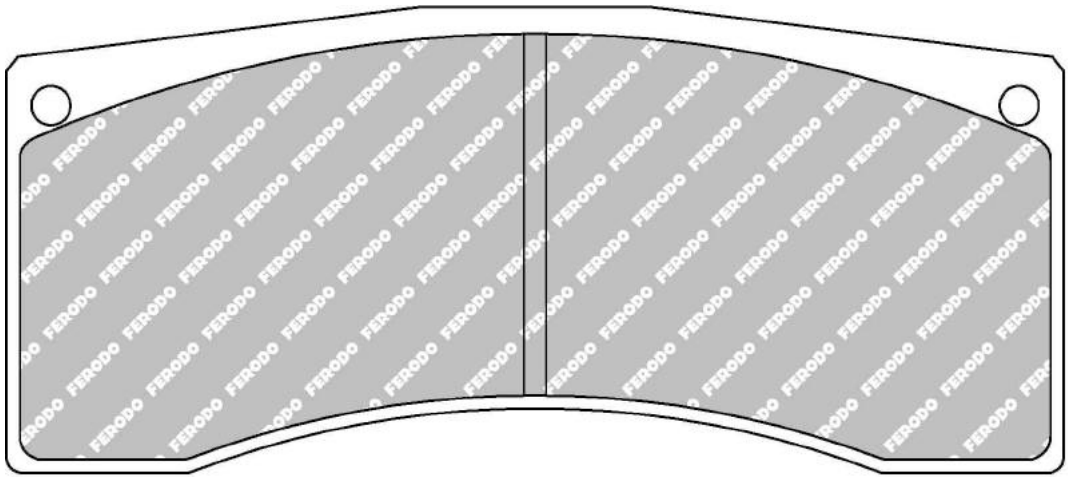

ALSO AVAILABLE		
SHAPE	TH. MM	NOTES
FRP3024	20	
FRP3029	26	
FRP3030	28	
FRP3140	16	

MATERIAL AVAILABILITY						
H	C	R	W	WB	Z	ZB
		✔	✔		✔	

CROSS REFERENCE	
BREMBO	07.7859.60
BREMBO	07.7859.70
BREMBO	B1817
BREMBO	B2617
HAWK	HB342
PAGID	8030
PFC	7770.XX.17
Raybestos	DR562

FERODO RACING

Updated on November 2020

✔ Available
✖ Out of Range
In Introduction
Exhausting
Make to order

FRP3088


139.8mm = 5.504"

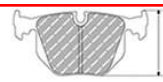
69.0mm = 2.717"


17.5mm = 0.689"


61.5mm = 2.421"

MITSUBISHI Front, PEUGEOT Front

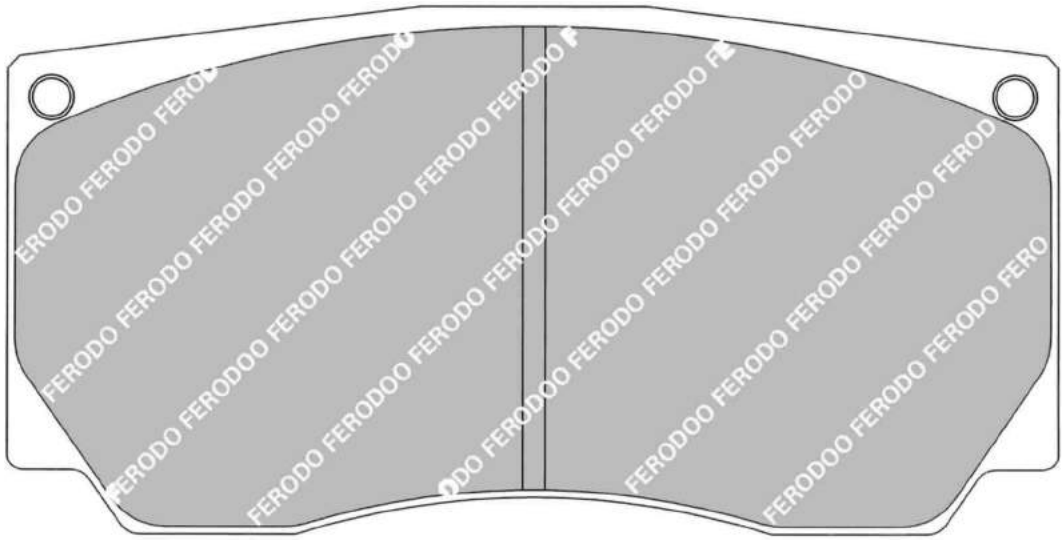

MATERIAL AVAILABILITY						
H	C	R	W	WB	Z	ZB
		✔	✖		✔	

CROSS REFERENCE	
BREMBO	07.6955.50
PAGID	8033
PFC	7772.XX.18

FRP3091


132.4mm = 5.213"

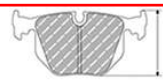
55.0mm = 2.165"


16.7mm = 0.657"


44.9mm = 1.768"

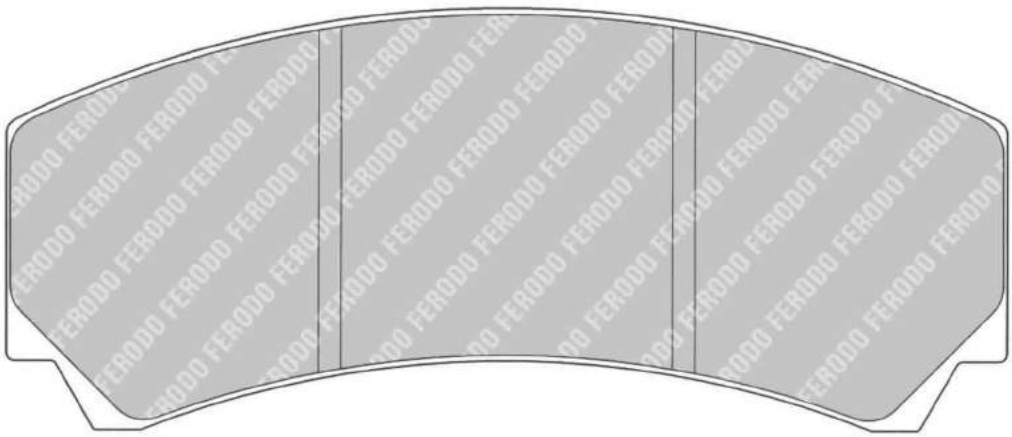

MATERIAL AVAILABILITY						
H	C	R	W	WB	Z	ZB
		✉				

CROSS REFERENCE	
AP RACING	CP3215D46

✔ Available
✖ Out of Range
In Introduction
Exhausting
Make to order

FERODO RACING

FRP3092


110.3mm = 4.343"

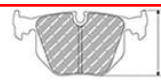
39.0mm = 1.535"


18.0mm = 0.709"


34.0mm = 1.339"

Formula Renault Front / Rear

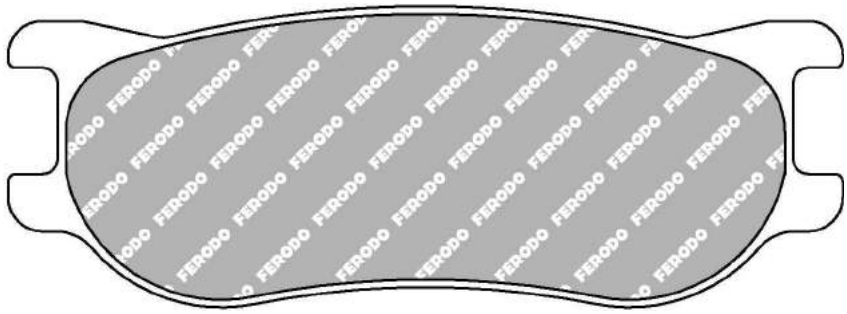

MATERIAL AVAILABILITY						
H	C	R	W	WB	Z	ZB
	✉		✔		✉	

CROSS REFERENCE	
PAGID	8034

FRP3094


59.0mm = 2.323"

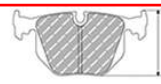
54.0mm = 2.126"


15.5mm = 0.610"


47.5mm = 1.870"

CHEVROLET Front / Rear

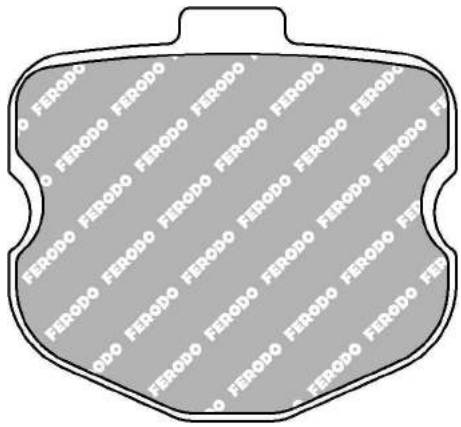

Note - Corvette C6 Z06 requires 3 sets front axle and 2 sets rear axle

MATERIAL AVAILABILITY						
H	C	R	W	WB	Z	ZB
✉			✔			

CROSS REFERENCE	
PAGID	8240
PAGID	8240front
PAGID	8240rear

FERODO RACING

Updated on November 2020

✔ Available
✖ Out of Range
In Introduction
Exhausting
✉ Make to order

FRP3095


130.2mm = 5.126"

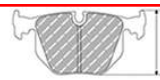
70.0mm = 2.756"


19.0mm = 0.748"


60.4mm = 2.378"

PORSCHE Rear

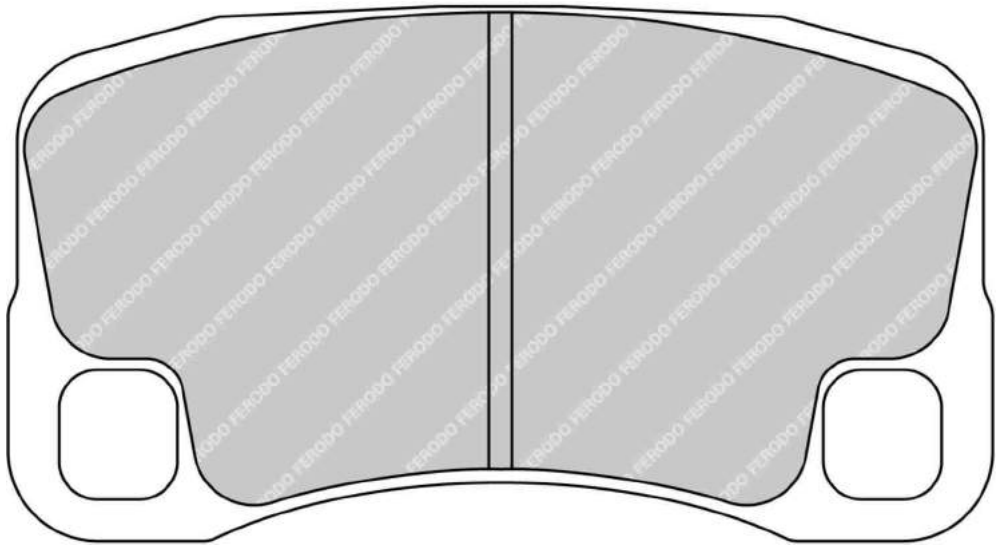

DS2500 (H) configuration shown. Other materials have tab on backplate top edge

ALSO AVAILABLE		
SHAPE	TH. MM	NOTES
FRP3143	17.0	

CROSS REFERENCE	
BREMBO	B6719
PAGID	8006

MATERIAL AVAILABILITY						
H	C	R	W	WB	Z	ZB
✓			✓		✗	✉

✓ Available ✗ Out of Range In Introduction ⚠ Exhausting ✉ Make to order

FERODO RACING

Updated on November 2020

FRP3096


190.4mm = 7.496"

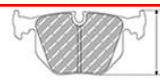
101.0mm = 3.976"


19.0mm = 0.748"


63.5mm = 2.500"

PORSCHE Front

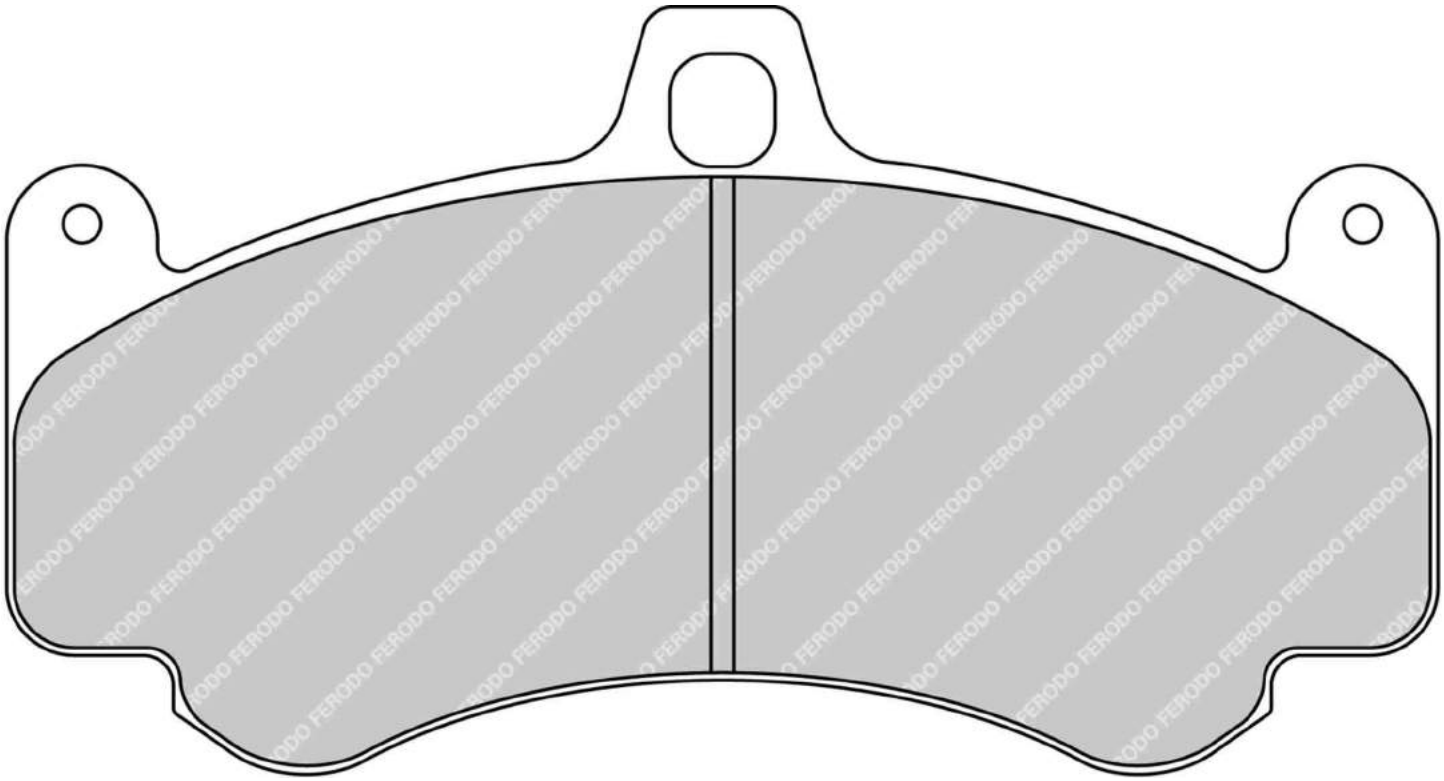

ALSO AVAILABLE		
SHAPE	TH. MM	NOTES
FRP3075	17.5	

CROSS REFERENCE	
BREMBO	B6619
CL BRAKES	4126
PAGID	8004

MATERIAL AVAILABILITY						
H	C	R	W	WB	Z	ZB
✓			✓		✗	✉

FERODO RACING

Updated on November 2020

Available
Out of Range
In Introduction
Exhausting
Make to order

FRP3097

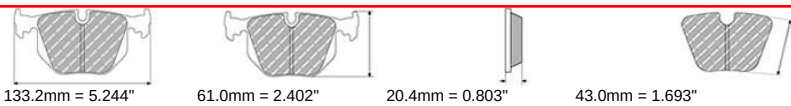

133.2mm = 5.244" 61.0mm = 2.402" 20.4mm = 0.803" 43.0mm = 1.693"

FMSI No: DR21

FORD Front

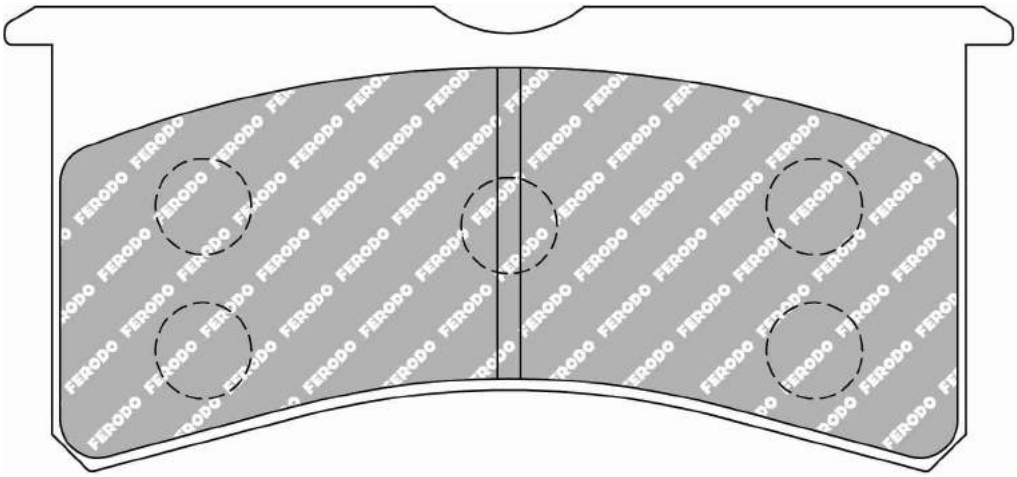

Same as FRP501 but fixed bridge caliper

ALSO AVAILABLE		
SHAPE	**TH. MM**	**NOTES**
FRP501	**none**	**Non-Fixed Bridge caliper**
FRP3154	**16.5**	

MATERIAL AVAILABILITY						
H	**C**	**R**	**W**	**WB**	**Z**	**ZB**
✔		✔	✔		✔	

CROSS REFERENCE	
AP RACING	CP8250-D41
FMSI	DR21
HAWK	HB521
PAGID	2205
Raybestos	DR701
Wilwood	7420

✔ Available ✘ Out of Range In Introduction Exhausting Make to order

FERODO RACING

Updated on November 2020

3327

FRP3098


189.6mm = 7.465"

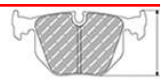
87.0mm = 3.425"


17.5mm = 0.689"


57.5mm = 2.264"

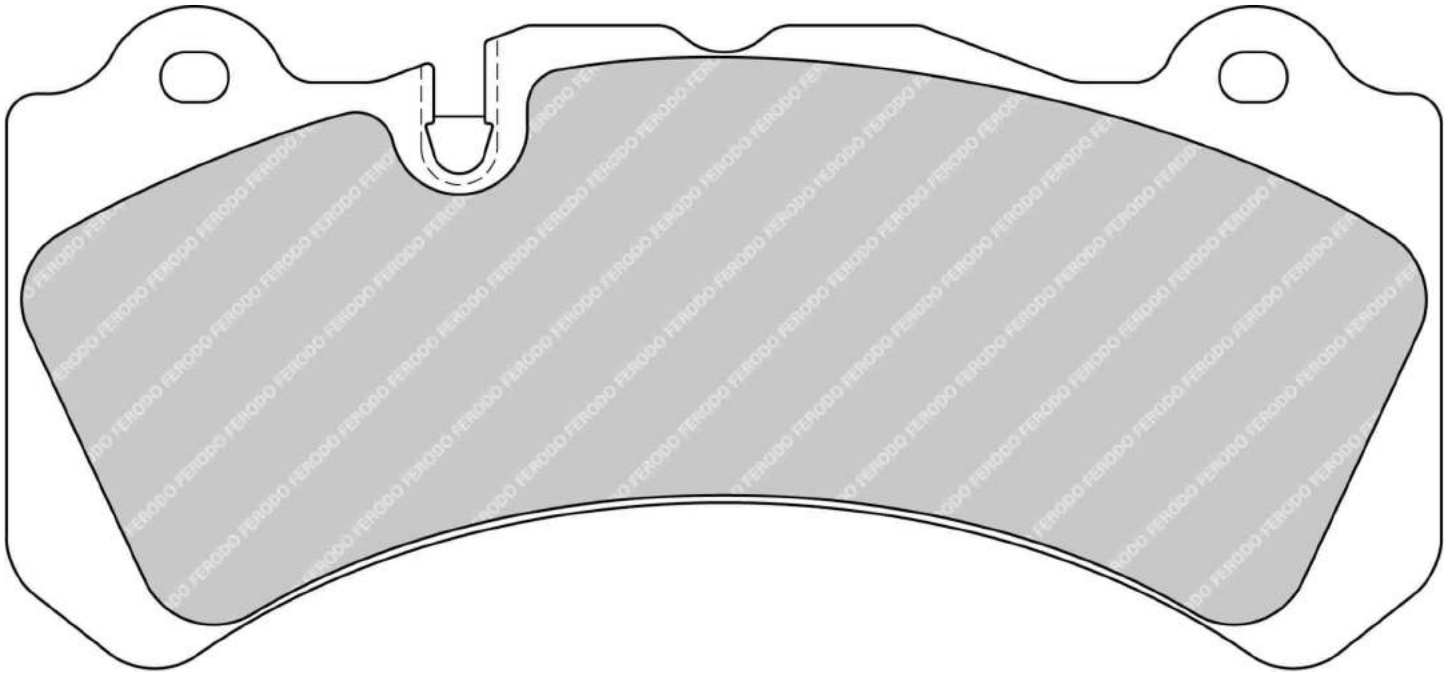

MATERIAL AVAILABILITY						
H	C	R	W	WB	Z	ZB
✔		✔	✔		✔	

CROSS REFERENCE	
BREMBO	07.9551.13
BREMBO	07.B314.59 (Th 16.8)
BREMBO	B6417
PAGID	8062

FERODO RACING

Updated on November 2020

Available
Out of Range
In Introduction
Exhausting
Make to order

FRP3099


189.8mm = 7.472"

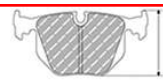
73.0mm = 2.874"


17.5mm = 0.689"


48.0mm = 1.890"

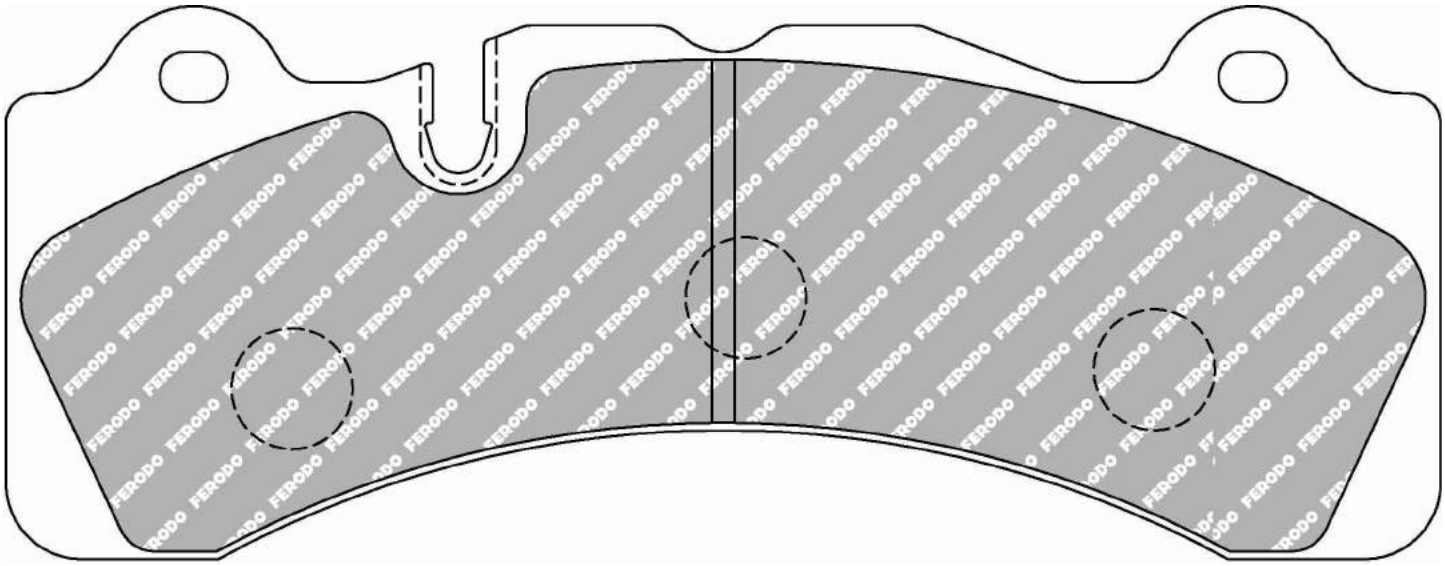

MATERIAL AVAILABILITY						
H	C	R	W	WB	Z	ZB
✔		✔	✔		✉	

CROSS REFERENCE	
BREMBO	07.B314.58
BREMBO	B6517
BREMBO	XA5.71.M2
PAGID	8061

✔ Available
✖ Out of Range
In Introduction
Exhausting
Make to order

FERODO RACING

Updated on November 2020

FRP3100


164.8mm = 6.488"

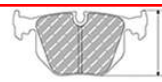
81.0mm = 3.189"


16.1mm = 0.634"


55.0mm = 2.165"

FMSI No: D1116

ALFA ROMEO Front, LEXUS Front, MASERATI Front, MERCEDES Front, SUBARU Front

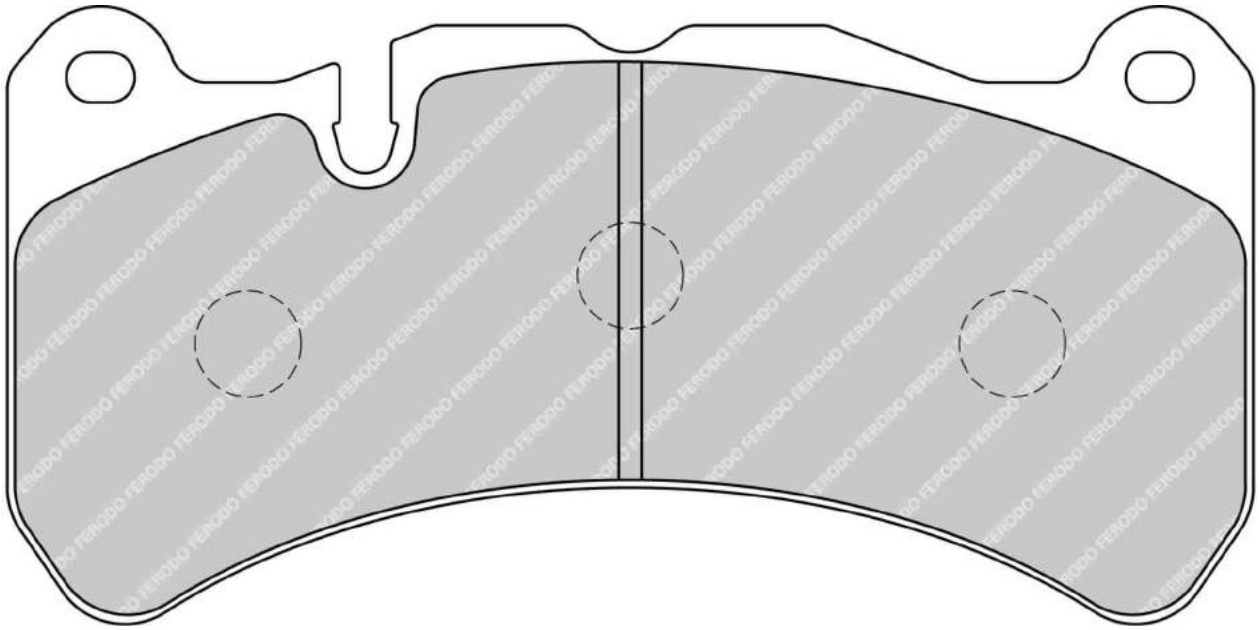

MATERIAL AVAILABILITY						
H	C	R	W	WB	Z	ZB
✔		✔				

CROSS REFERENCE	
BREMBO	07.8365.33
BREMBO	07.9209.xx
FMSI	D1116
PAGID	8005

FRP3101


138.1mm = 5.437"

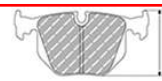
61.5mm = 2.421"


17.5mm = 0.689"


43.0mm = 1.693"

PEUGEOT Front / Rear

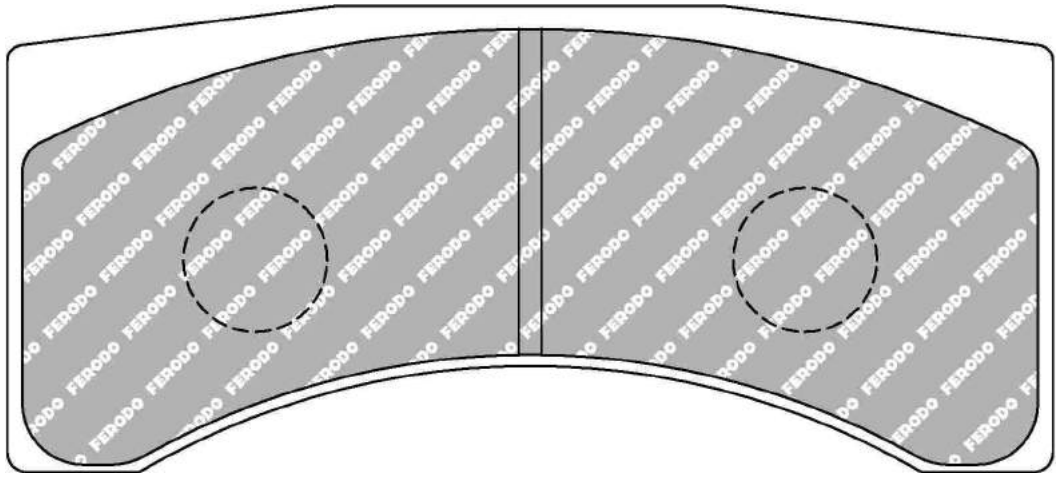

MATERIAL AVAILABILITY						
H	C	R	W	WB	Z	ZB

FERODO RACING

Updated on November 2020

✔ Available
✖ Out of Range
In Introduction
Exhausting
Make to order

FRP3102

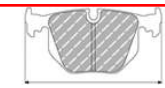
99.8mm = 3.929"


39.0mm = 1.535"


16.0mm = 0.630"


31.8mm = 1.252"

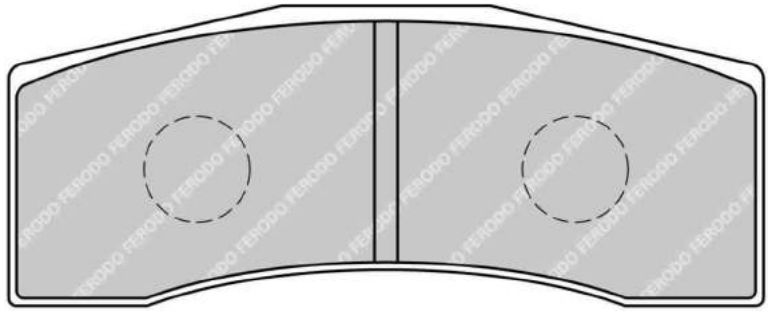

MATERIAL AVAILABILITY						
H	C	R	W	WB	Z	ZB
			✔		✔	

CROSS REFERENCE	
AP RACING	CP7031D32
PAGID	8060

FRP3103

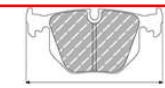
103.8mm = 4.087"

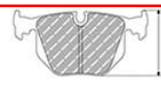
45.0mm = 1.772"


16.0mm = 0.630"


37.5mm = 1.476"

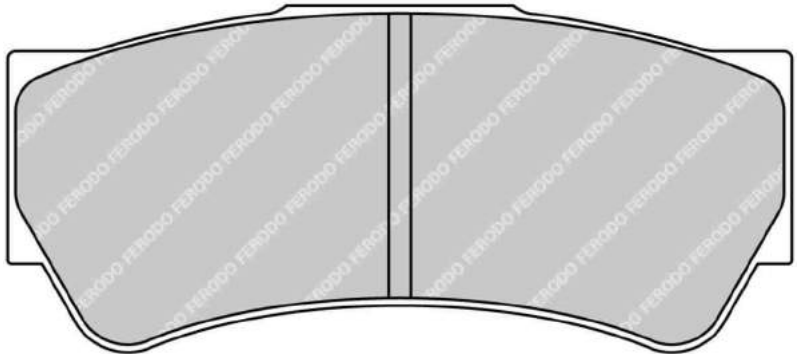

MATERIAL AVAILABILITY						
H	C	R	W	WB	Z	ZB
		✉	✉		✔	✉

CROSS REFERENCE	
BREMBO	07.A262.20
BREMBO	B1016
PAGID	8049

FRP3104


50.3mm = 1.980"

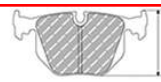
58.0mm = 2.283"


12.7mm = 0.500"


42.2mm = 1.661"

FMSI No: DR31

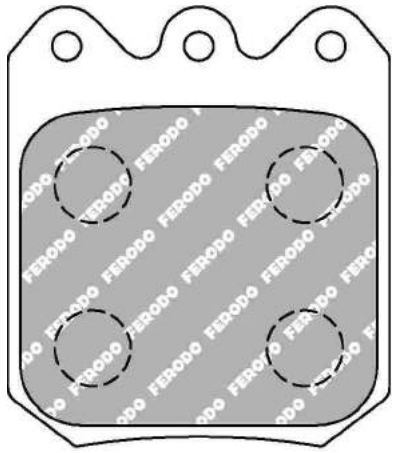

MATERIAL AVAILABILITY						
H	C	R	W	WB	Z	ZB
✔	✔	✔			✉	

CROSS REFERENCE	
FMSI	DR31
HAWK	HB622
Raybestos	DR25
Wilwood	6812

FRP3105


120.0mm = 4.724"

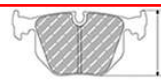
70.0mm = 2.756"


15.0mm = 0.591"


50.0mm = 1.969"

HONDA Front

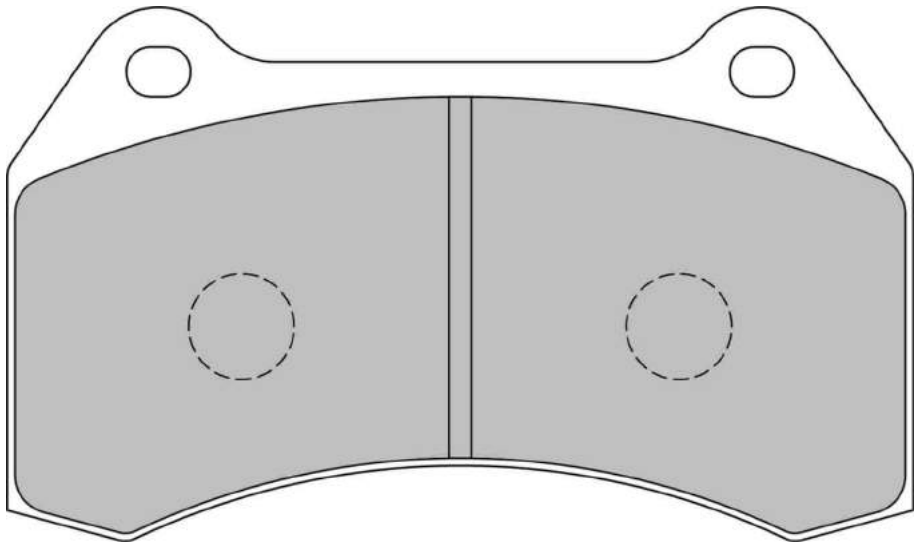

MATERIAL AVAILABILITY						
H	C	R	W	WB	Z	ZB
✉		✉				

FERODO RACING

Updated on November 2020

✔ Available
✖ Out of Range
In Introduction
Exhausting
✉ Make to order

FRP3106


189.8mm = 7.472"

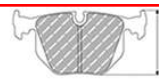
92.9mm = 3.657"


18.8mm = 0.740"


65.0mm = 2.559"

FMSI No: D1382

NISSAN Front

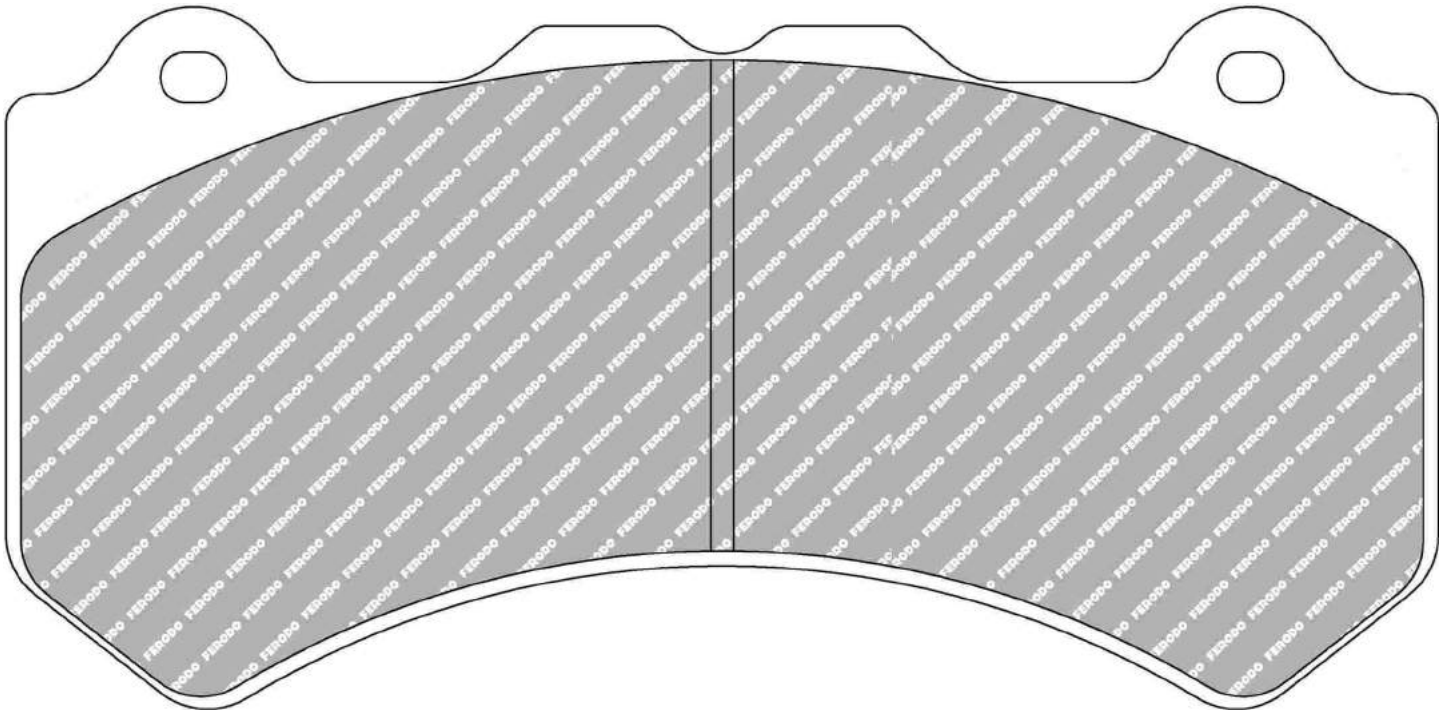

ALSO AVAILABLE		
SHAPE	TH. MM	NOTES
FRP3133	16.5	

MATERIAL AVAILABILITY						
H	C	R	W	WB	Z	ZB
✔			✖	✔	✔	

CROSS REFERENCE	
BREMBO	07.8590.15
FMSI	D1382
PAGID	8081
Raybestos	DR1382

✔ Available ✖ Out of Range In Introduction
Exhausting Make to order

FERODO RACING

Updated on November 2020

FRP3107


130.3mm = 5.130"


78.0mm = 3.071"


16.9mm = 0.665"


50.0mm = 1.969"

PEUGEOT Front

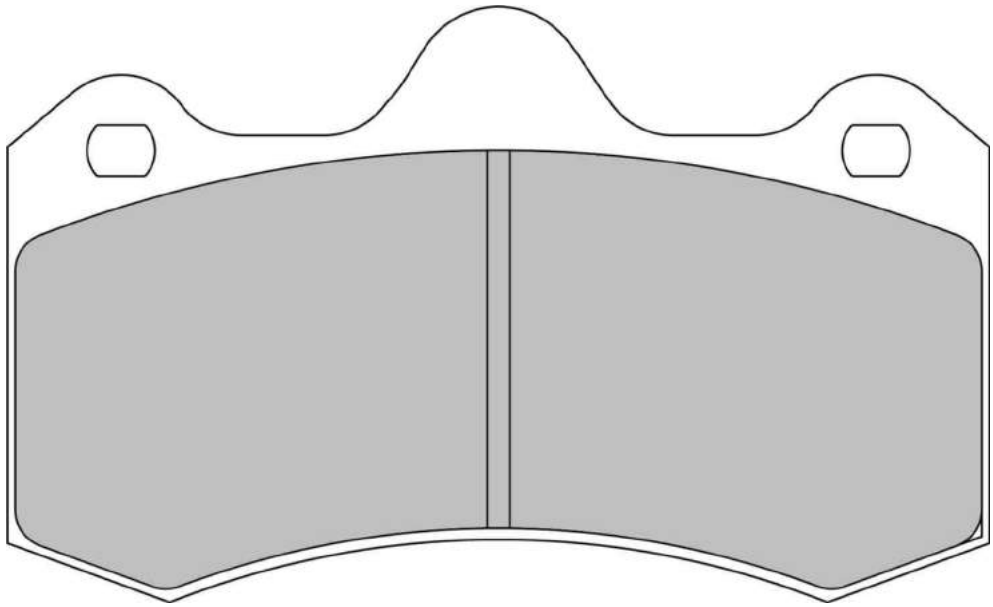

ALSO AVAILABLE		
SHAPE	TH. MM	NOTES
FRP3083		D55

CROSS REFERENCE	
AP RACING	CP6600D50

MATERIAL AVAILABILITY						
H	C	R	W	WB	Z	ZB
✔		✔				

FRP3108


79.4mm = 3.126"

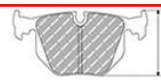
58.0mm = 2.283"


12.5mm = 0.492"


44.3mm = 1.744"

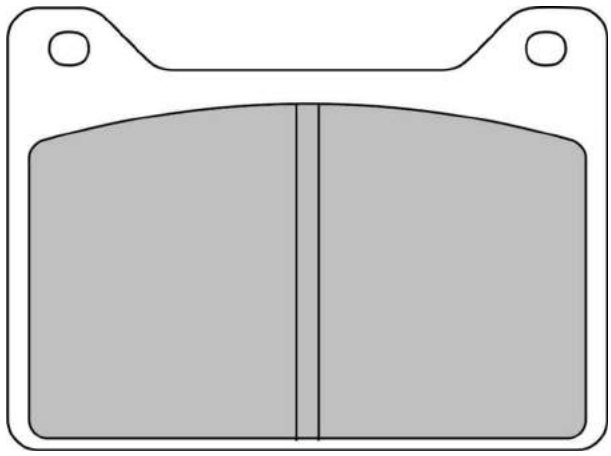

MATERIAL AVAILABILITY						
H	C	R	W	WB	Z	ZB
✔					✔	

CROSS REFERENCE	
EBC	DP4057
Wilwood	7912

FERODO RACING

Updated on November 2020

✔ Available
✖ Out of Range
In Introduction
Exhausting
Make to order

FRP3109


109.8mm = 4.323"

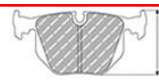
69.0mm = 2.717"


12.5mm = 0.492"


51.3mm = 2.020"

ASTON MARTIN Rear

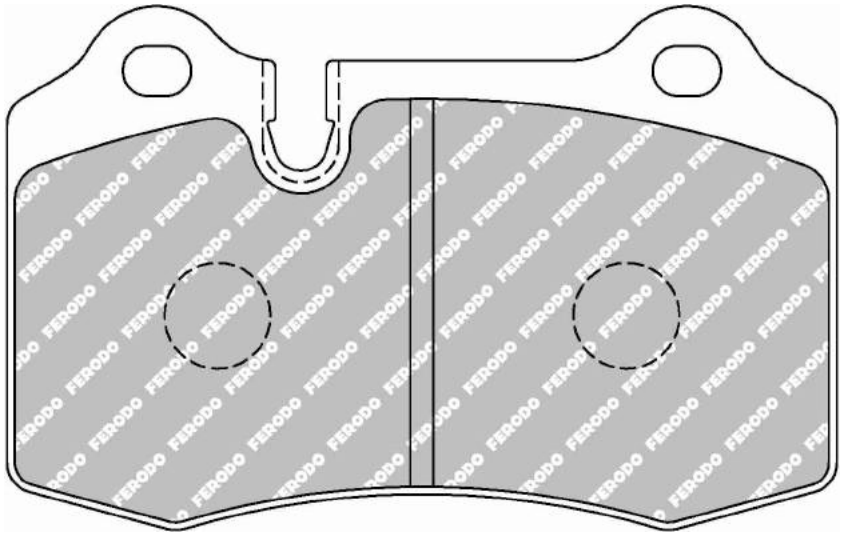

ALSO AVAILABLE		
SHAPE	TH. MM	NOTES
FCP721	17.3	
FCP1348	15	

CROSS REFERENCE	
BREMBO	B1114
BREMBO	XA4.17.M4

MATERIAL AVAILABILITY						
H	C	R	W	WB	Z	ZB

Available
Out of Range
In Introduction
Exhausting
Make to order

FERODO RACING

Updated on November 2020

FRP3110


163.8mm = 6.449"

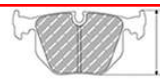
66.0mm = 2.598"


25.0mm = 0.984"


52.5mm = 2.067"

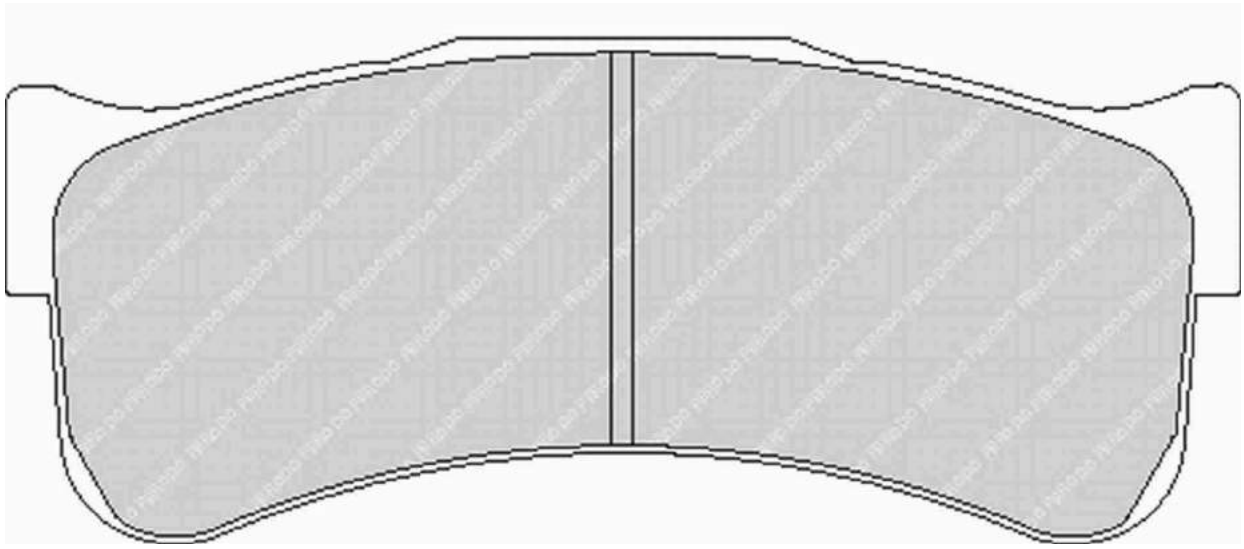

ALSO AVAILABLE		
SHAPE	TH. MM	NOTES
FRP3031	29	
FRP3123	21.5	

CROSS REFERENCE	
BREMBO	07.7293.7
BREMBO	B2425
PAGID	8087

MATERIAL AVAILABILITY						
H	C	R	W	WB	Z	ZB
		✉	✗	✓	✗	✓

FRP3112


103.8mm = 4.087"

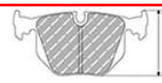
45.0mm = 1.772"


16.0mm = 0.630"


32.0mm = 1.260"

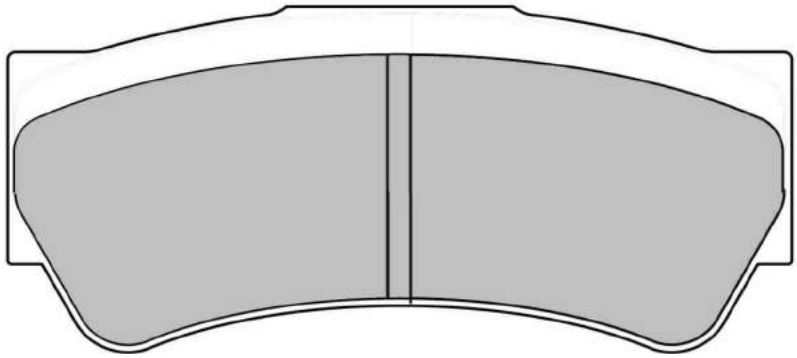

BREMBO 2009 F3 System - for reduced diameter rear disc - Material availability on request

MATERIAL AVAILABILITY						
H	C	R	W	WB	Z	ZB
					✉	

FERODO RACING

Updated on November 2020

✓ Available
✗ Out of Range
In Introduction
Exhausting
✉ Make to order

FRP3113

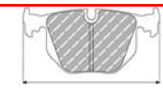
79.8mm = 3.142"

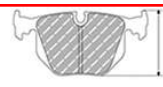
62.0mm = 2.441"


17.5mm = 0.689"


50.5mm = 1.988"

FORD Front

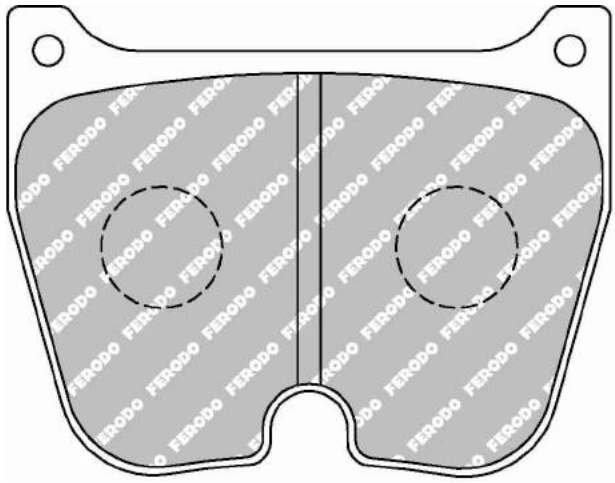

MATERIAL AVAILABILITY						
H	C	R	W	WB	Z	ZB
✉		✔			✉	

CROSS REFERENCE	
BREMBO	07.A010.10

FRP3114


149.3mm = 5.878"

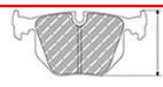
82.0mm = 3.228"


16.9mm = 0.665"


54.0mm = 1.988"

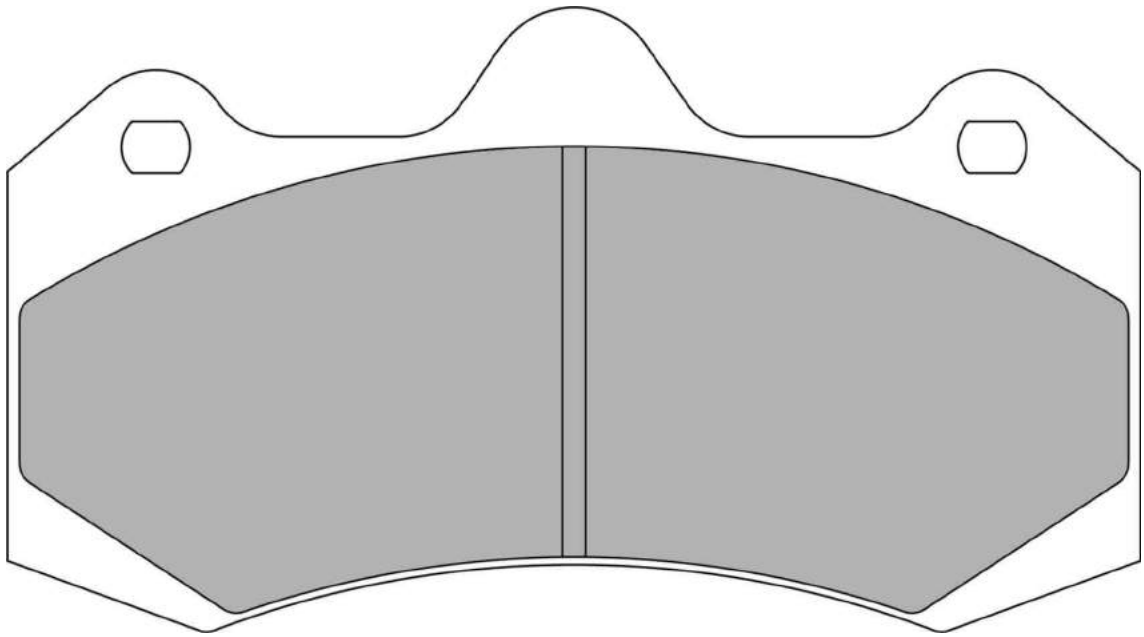

MATERIAL AVAILABILITY						
H	C	R	W	WB	Z	ZB
✔		✔	✉		✉	

CROSS REFERENCE	
AP RACING	CP7040D54

✔ Available
✖ Out of Range
In Introduction
Exhausting
✉ Make to order

FERODO RACING

Updated on November 2020

FRP3115

WVA No: 25594 15,9


130.0mm = 5.118"

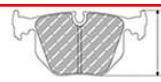
73.0mm = 2.874"


14.8mm = 0.583"


51.0mm = 2.008"

LOTUS Rear

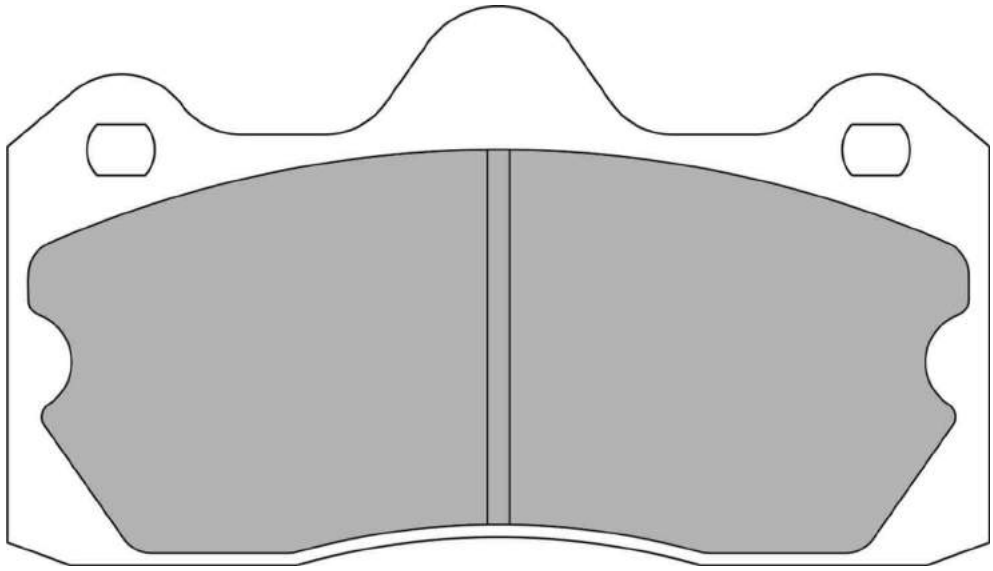

MATERIAL AVAILABILITY						
H	C	R	W	WB	Z	ZB
✔		✉	✔			

CROSS REFERENCE	
AP RACING	CP6627D51
PAGID	8214
WVA	25594 15,9

FRP3116


133.2mm = 5.244"

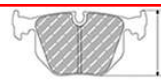
66.0mm = 2.598"


20.4mm = 0.803"


50.0mm = 1.969"

FORD Front

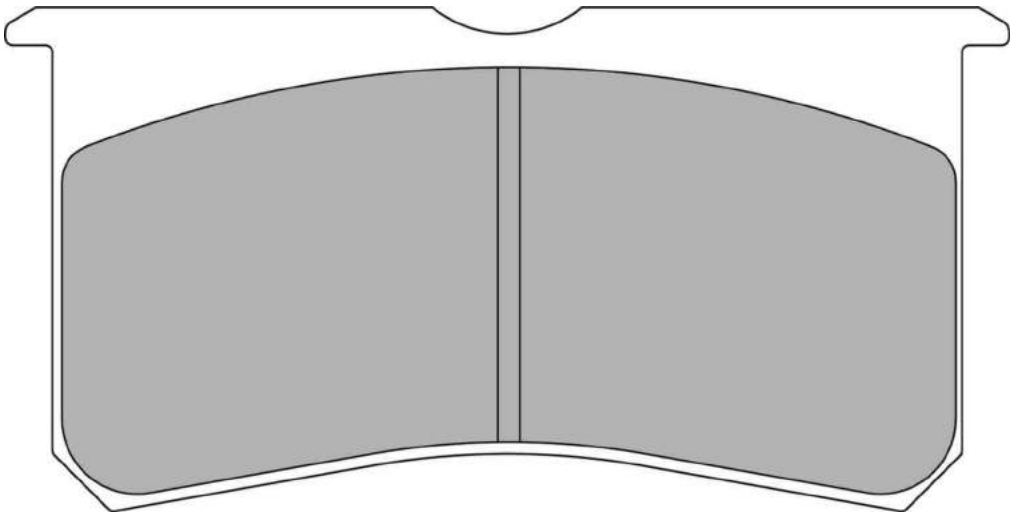

MATERIAL AVAILABILITY						
H	C	R	W	WB	Z	ZB
✔		✔	✔		✔	

CROSS REFERENCE	
AP RACING	CP8250D50

FERODO RACING

Updated on November 2020

✔ Available
✖ Out of Range
In Introduction
Exhausting
Make to order

FRP3117


103.8mm = 4.087"

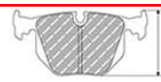
48.0mm = 1.890"


16.0mm = 0.630"


37.5mm = 1.476"

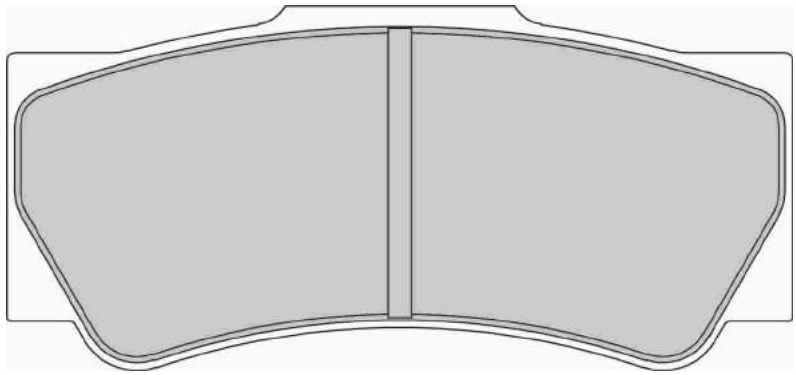

MATERIAL AVAILABILITY						
H	C	R	W	WB	Z	ZB
		✔				

CROSS REFERENCE	
PAGID	8078

FRP3118


108.5mm = 4.272"

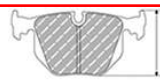
46.0mm = 1.811"


16.0mm = 0.630"


40.7mm = 1.602"

SUZUKI Front

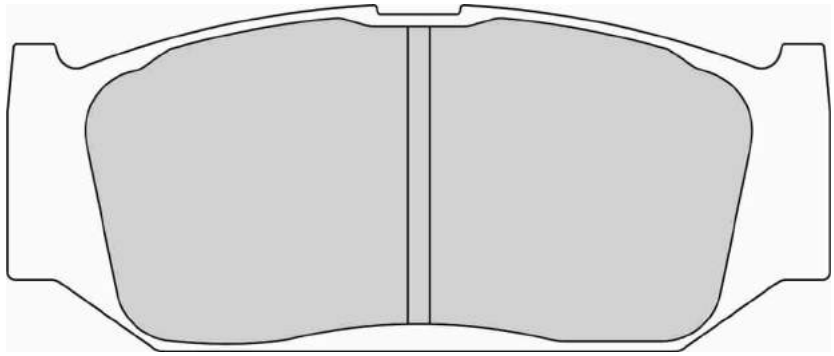

MATERIAL AVAILABILITY						
H	C	R	W	WB	Z	ZB
			✔			

CROSS REFERENCE	
Oe Suzuki	5581057K01

FRP3119

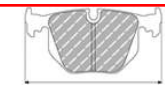
156.4mm = 6.157"

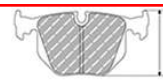
55.0mm = 2.165"


17.9mm = 0.705"


48.1mm = 1.894"

RENAULT Front

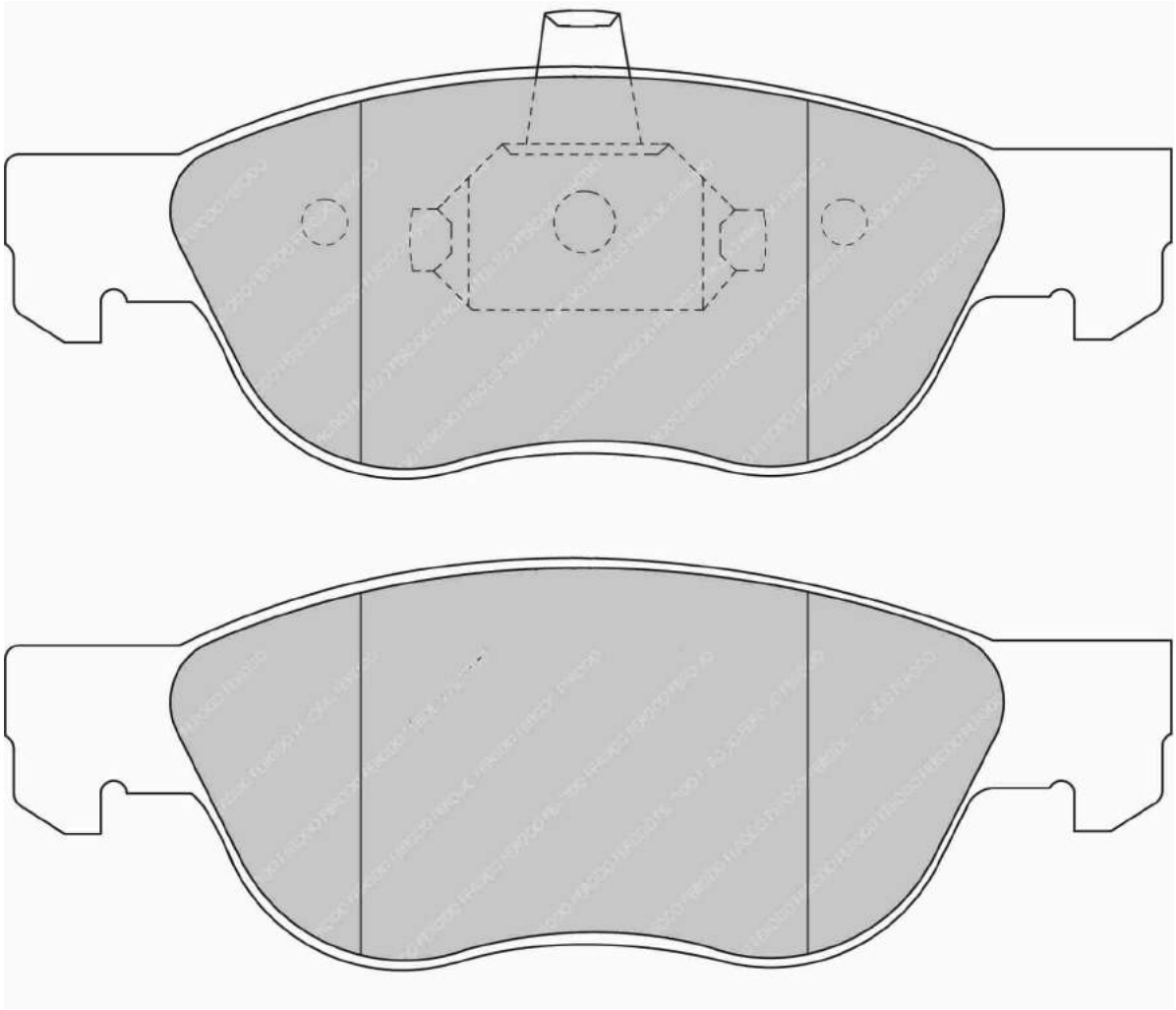

MATERIAL AVAILABILITY						
H	C	R	W	WB	Z	ZB
					✔	

FERODO RACING

Updated on November 2020

✔ Available
✖ Out of Range
In Introduction
Exhausting
Make to order

FRP3120

WVA No: 23855 16,00


143.5mm = 5.650"

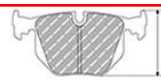
59.0mm = 2.323"


16.5mm = 0.650"


49.0mm = 1.929"

TOYOTA Front

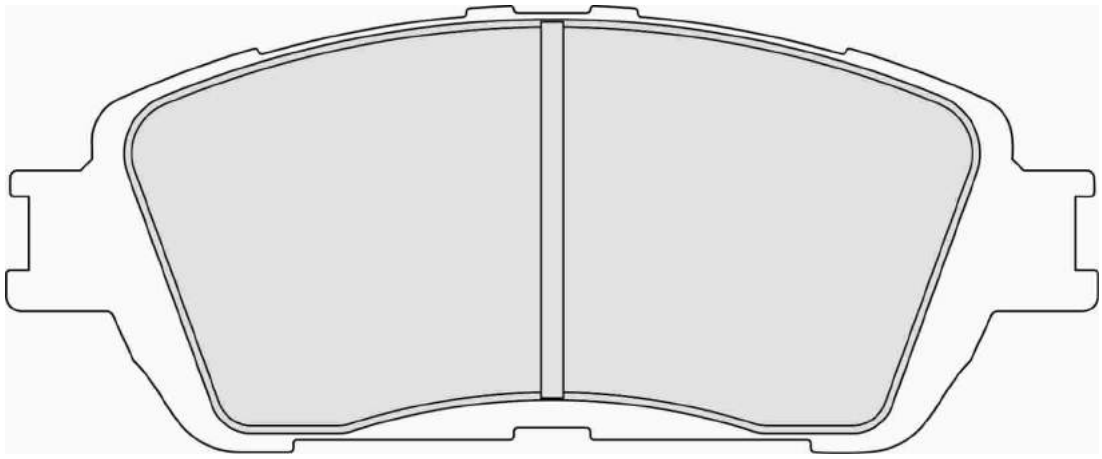

MATERIAL AVAILABILITY						
H	C	R	W	WB	Z	ZB
✔						

CROSS REFERENCE	
WVA	23855 16,00

FRP3121


147.6mm = 5.811"

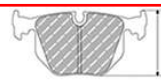
60.0mm = 2.362"


17.5mm = 0.689"


49.0mm = 1.929"

TOYOTA Front

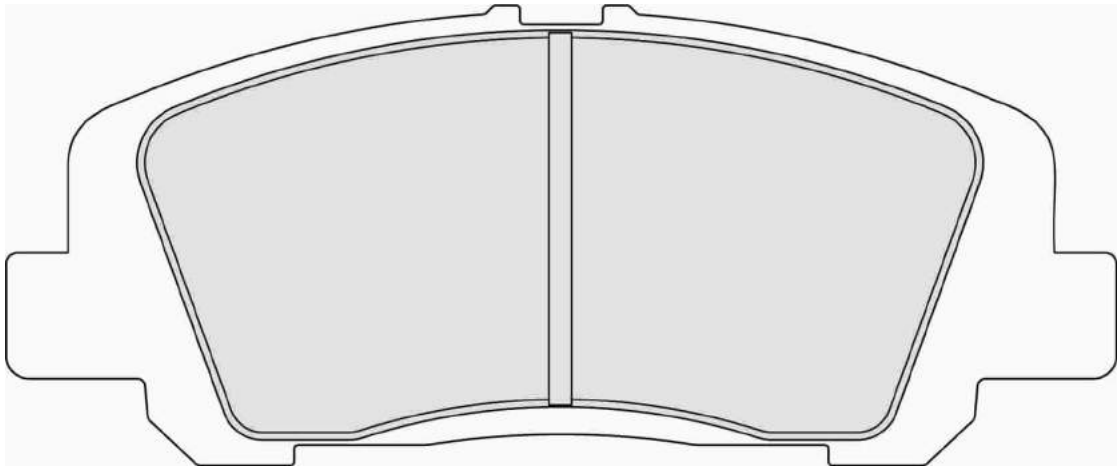

MATERIAL AVAILABILITY						
H	C	R	W	WB	Z	ZB
✔						

✔ Available
✖ Out of Range
In Introduction
Exhausting
Make to order

FERODO RACING

Updated on November 2020

FRP3122

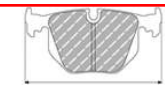
143.6mm = 5.654"

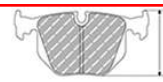
63.0mm = 2.480"


17.5mm = 0.689"


47.0mm = 1.850"

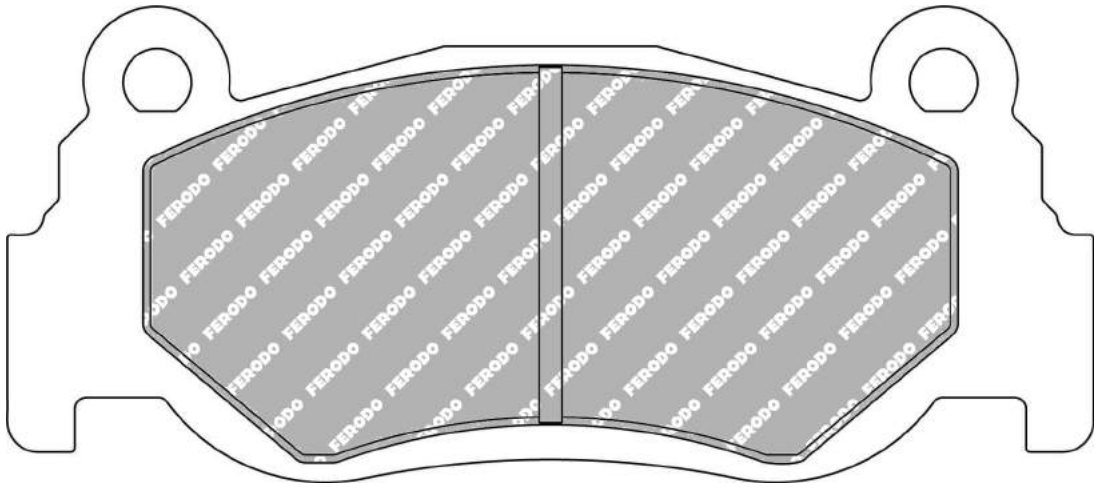

MATERIAL AVAILABILITY						
H	C	R	W	WB	Z	ZB
✉						

FRP3123


163.8mm = 6.449"

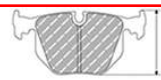
66.0mm = 2.598"


21.5mm = 0.846"

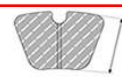
52.5mm = 2.067"

PORSCHE Front

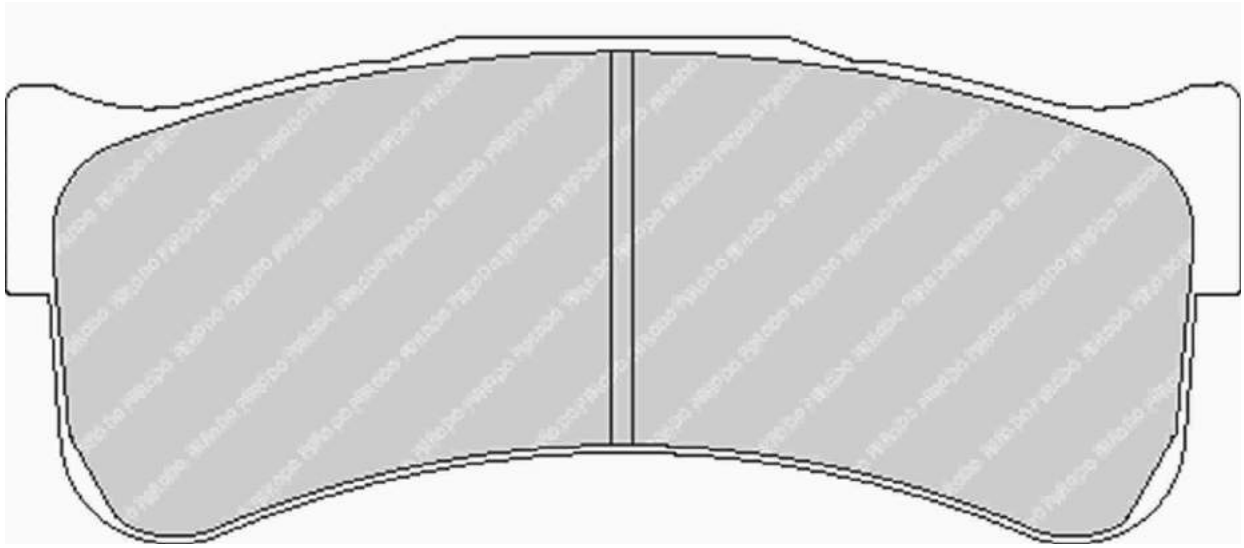

ALSO AVAILABLE		
SHAPE	TH. MM	NOTES
FRP3031	29	
FRP3110	25	

CROSS REFERENCE	
BREMBO	B2422
PAGID	8038

MATERIAL AVAILABILITY						
H	C	R	W	WB	Z	ZB
					✖	✔

FERODO RACING

Updated on November 2020

✔ Available
✖ Out of Range
In Introduction
Exhausting
Make to order

FRP3126


88.0mm = 3.465"

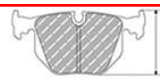
55.0mm = 2.165"


10.0mm = 0.394"


39.0mm = 1.535"

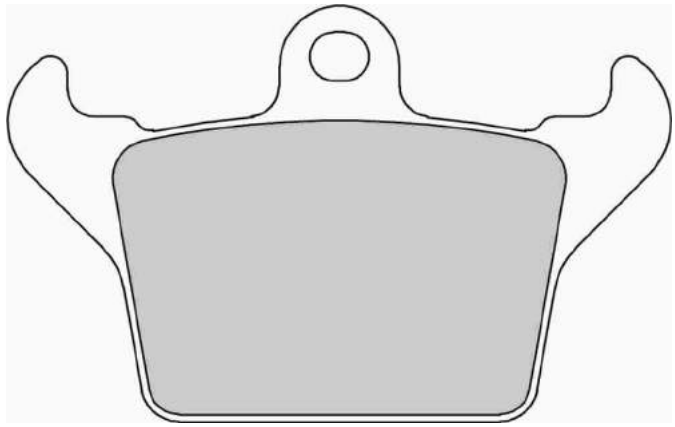

AP Racing/Brembo handbrake

MATERIAL AVAILABILITY						
H	C	R	W	WB	Z	ZB
✔						

FRP3127

WVA No: 21468 15,50


145.4mm = 5.724"

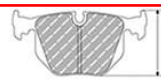
57.8mm = 2.276"


15.5mm = 0.610"


48.0mm = 1.890"

TOYOTA Front

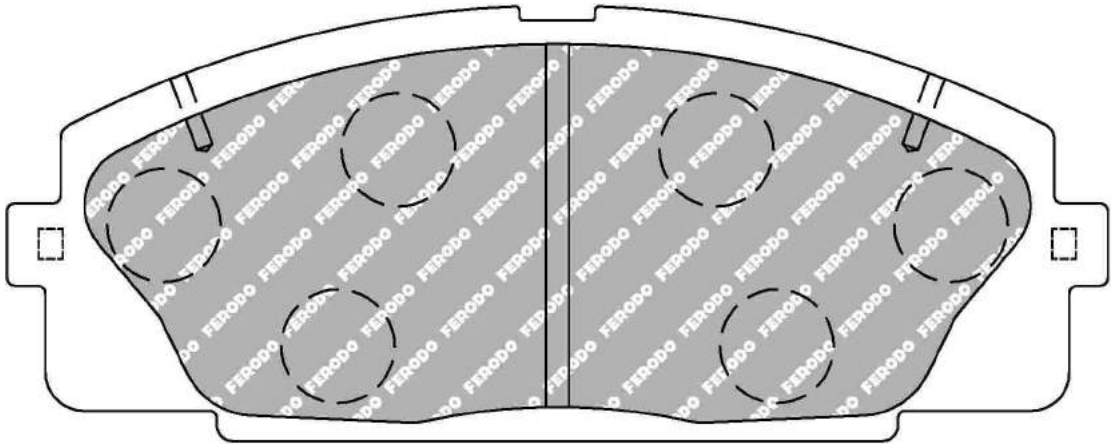

MATERIAL AVAILABILITY						
H	C	R	W	WB	Z	ZB
✔						

CROSS REFERENCE	
AKEBONO	AN - 334K
WVA	21468 15,50

FRP3128


163.5mm = 6.437"

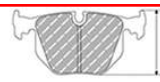
76.0mm = 2.992"


25.0mm = 0.984"


61.5mm = 2.421"

AUDI Front, FERRARI Front, LAMBORGHINI Front

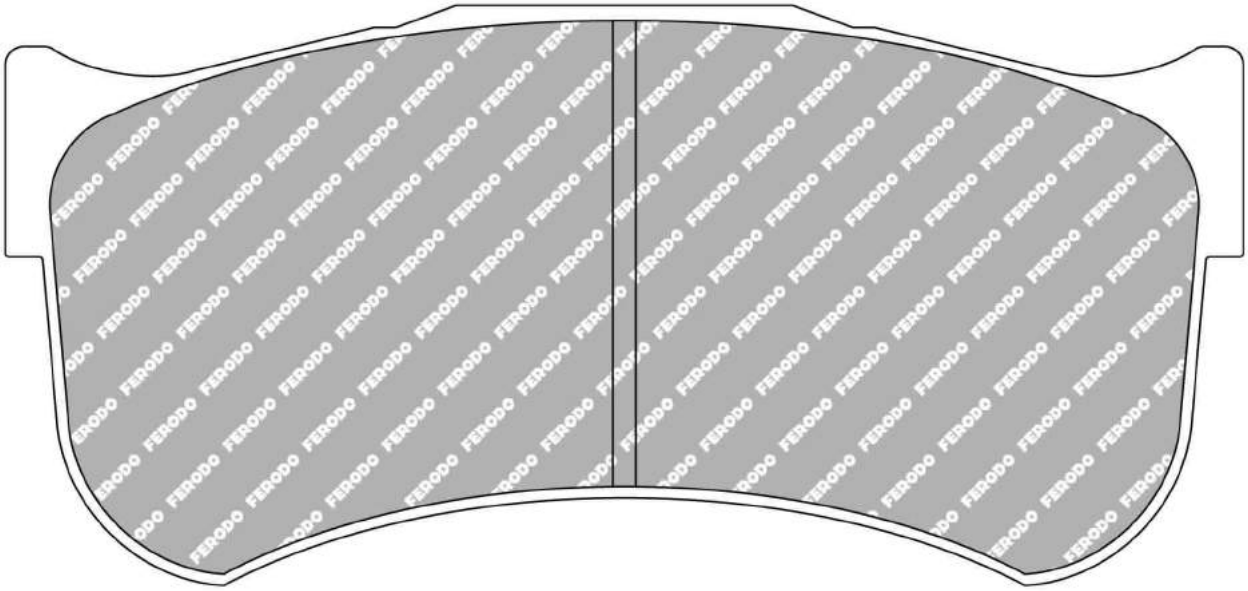

ALSO AVAILABLE		
SHAPE	TH. MM	NOTES
FRP3153	29	

CROSS REFERENCE	
BREMBO	B2825
PAGID	8101

MATERIAL AVAILABILITY						
H	C	R	W	WB	Z	ZB
					✔	✉

FRP3129


162.8mm = 6.409"

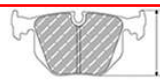
54.8mm = 2.157"


17.1mm = 0.673"


46.0mm = 1.811"

WVA No: 24513
FMSI No: D1081

FORD Front

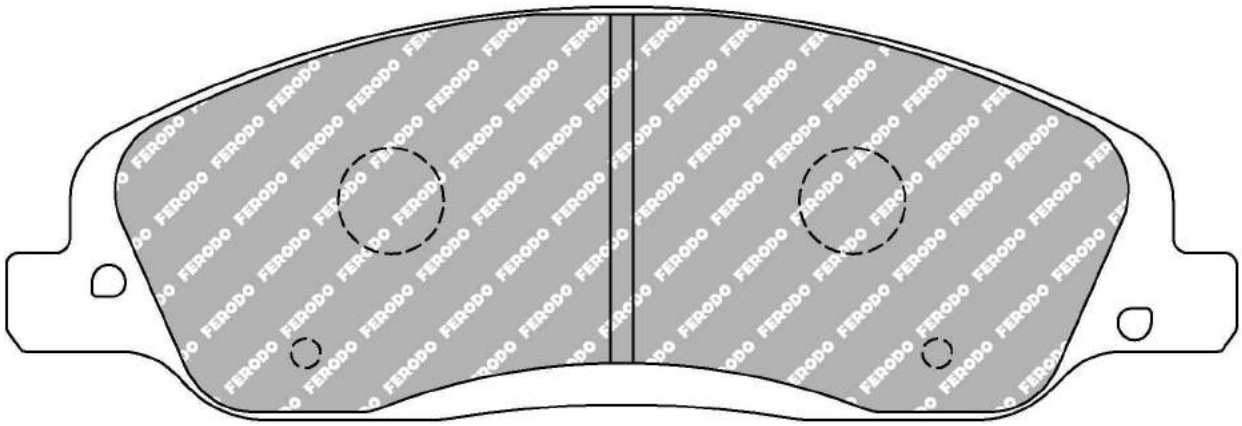

MATERIAL AVAILABILITY						
H	C	R	W	WB	Z	ZB
✔						

CROSS REFERENCE	
FMSI	D1081
HAWK	HB484 0,670
WVA	24513

FERODO RACING

Updated on November 2020

✔ Available
✖ Out of Range
In Introduction
Exhausting
Make to order

FRP3130


113.0mm = 4.449"

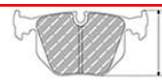
48.0mm = 1.890"


16.6mm = 0.654"


39.7mm = 1.563"

FMSI No: D1082

FORD Rear

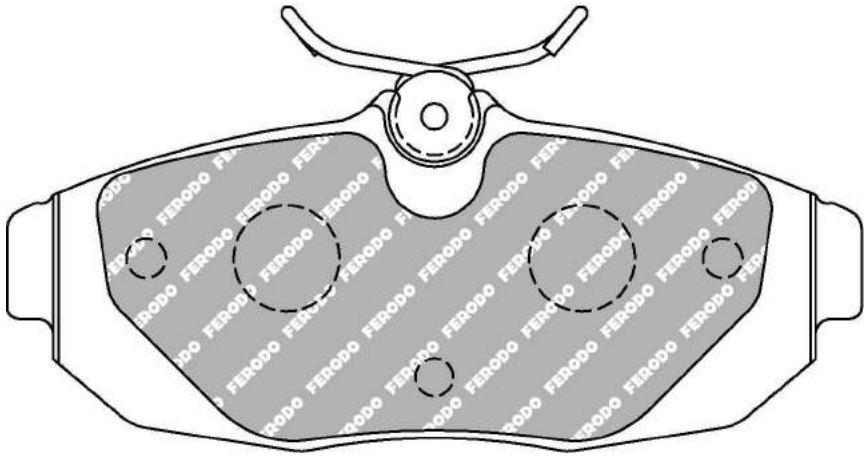

MATERIAL AVAILABILITY						
H	C	R	W	WB	Z	ZB
✔			✉			

CROSS REFERENCE	
FMSI	D1082
HAWK	HB485 0,656
PAGID	8113

FRP3131


163.9mm = 6.453"

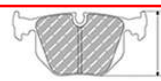
74.7mm = 2.941"


28.0mm = 1.102"

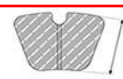
62.0mm = 2.441"

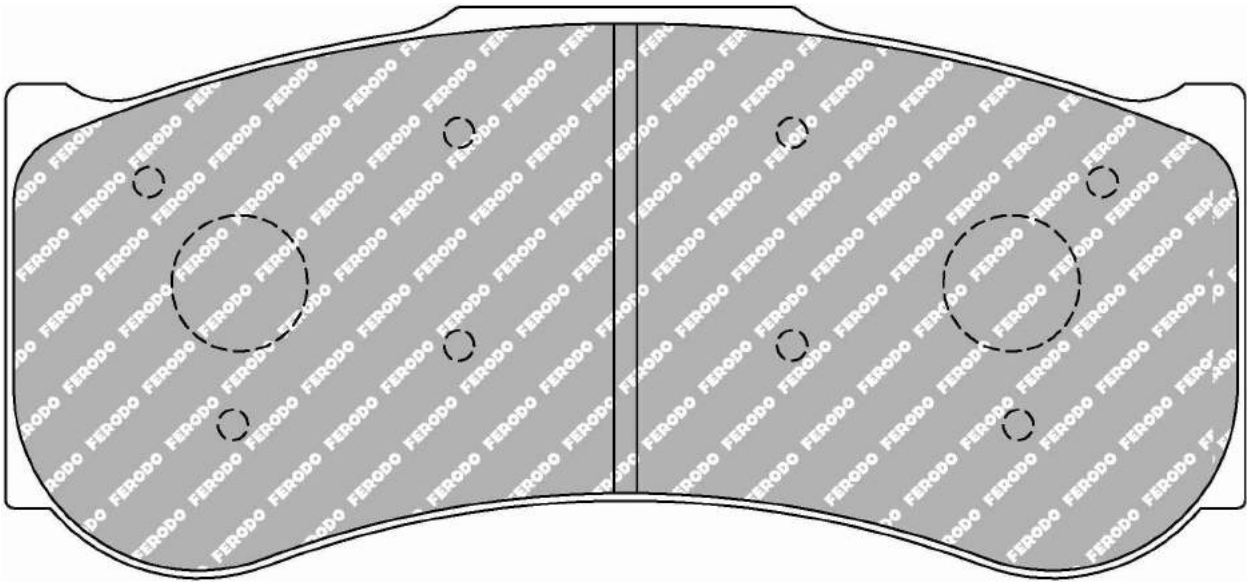

For material availability please contact us

ALSO AVAILABLE		
SHAPE	TH. MM	NOTES
FRP3150	30	

CROSS REFERENCE	
AP RACING	CP6268D62
PAGID	2019

MATERIAL AVAILABILITY						
H	C	R	W	WB	Z	ZB

✔ Available
✖ Out of Range
In Introduction
Exhausting
Make to order

FERODO RACING

Updated on November 2020

FRP3133

WVA No: 24455 16,90
FMSI No: D1405



AUDI Front, CADILLAC Front, CHEVROLET Front, JEEP Front, MERCEDES Front

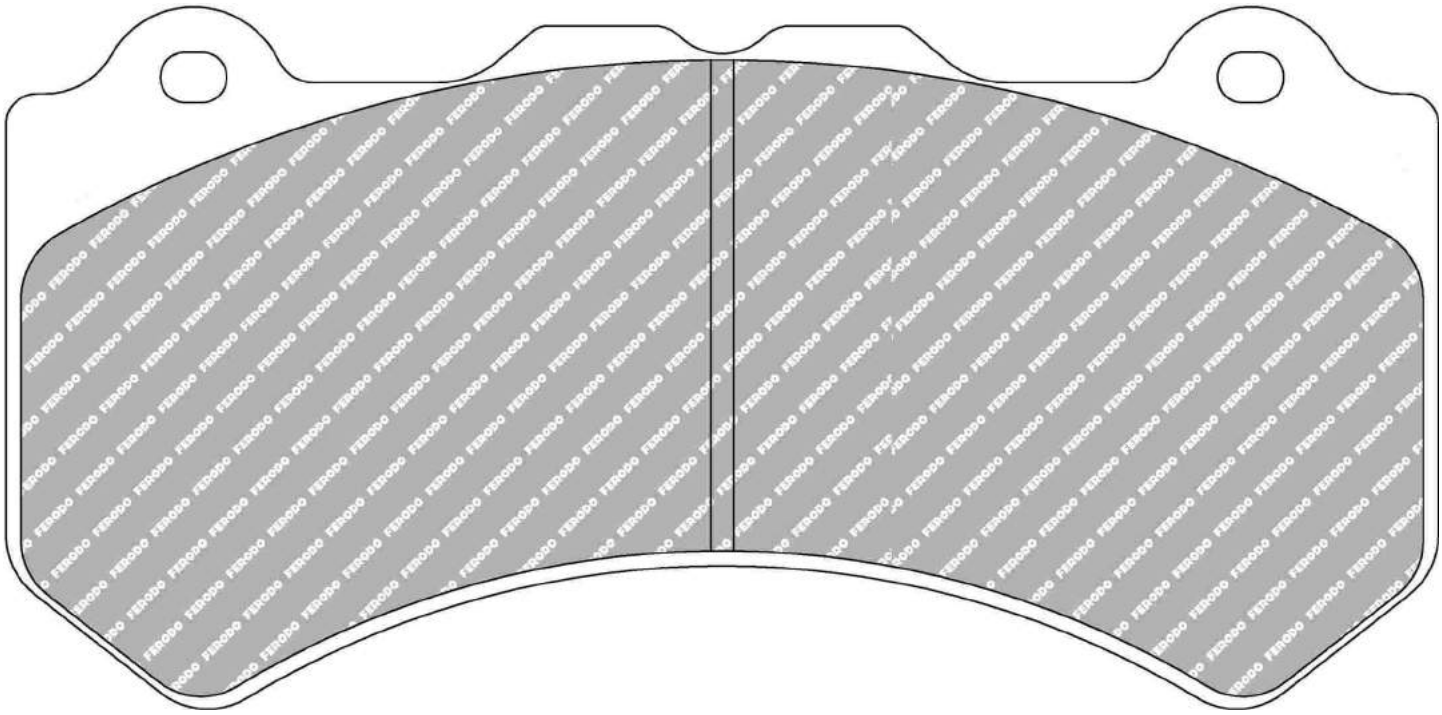

ALSO AVAILABLE		
SHAPE	TH. MM	NOTES
FRP3106	18.8	

MATERIAL AVAILABILITY						
H	C	R	W	WB	Z	ZB
✔			✔		✔	

CROSS REFERENCE	
FMSI	D1405
HAWK	HB649
PAGID	8081
WVA	24455 16,90

FERODO RACING
Updated on November 2020

Available
Out of Range
In Introduction
Exhausting
Make to order

FRP3134


152.0mm = 5.984"


63.2mm = 2.488"


16.8mm = 0.661"


54.5mm = 2.146"

JAGUAR Front

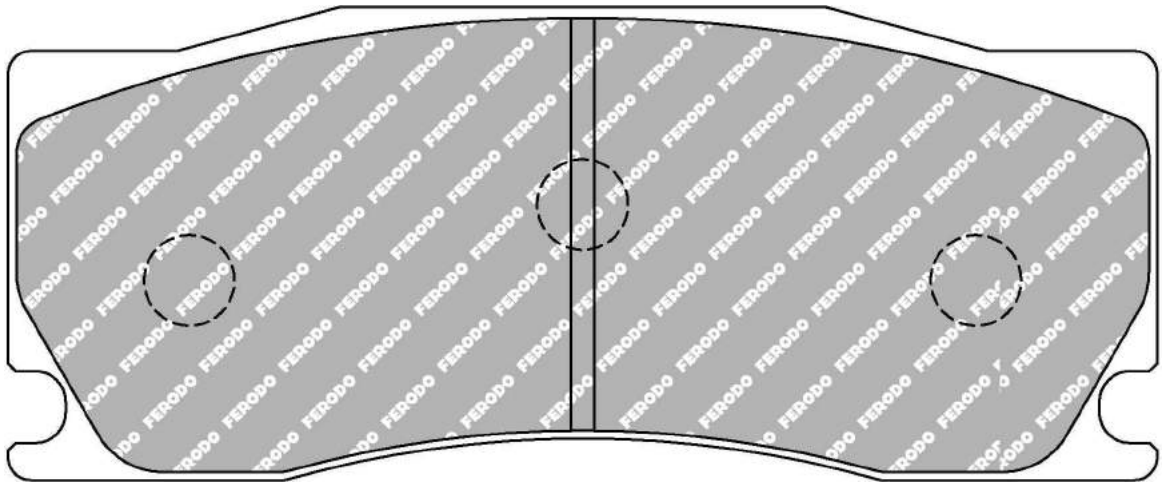

MATERIAL AVAILABILITY						
H	C	R	W	WB	Z	ZB
✔		✉			✔	

CROSS REFERENCE	
ALCON	PNF4497X831S

FRP3135

WVA No: 24851 15,60


132.1mm = 5.201"

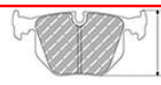
64.0mm = 2.520"


15.8mm = 0.622"

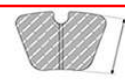
50.5mm = 1.988"

JAGUAR Rear, PEUGEOT Front

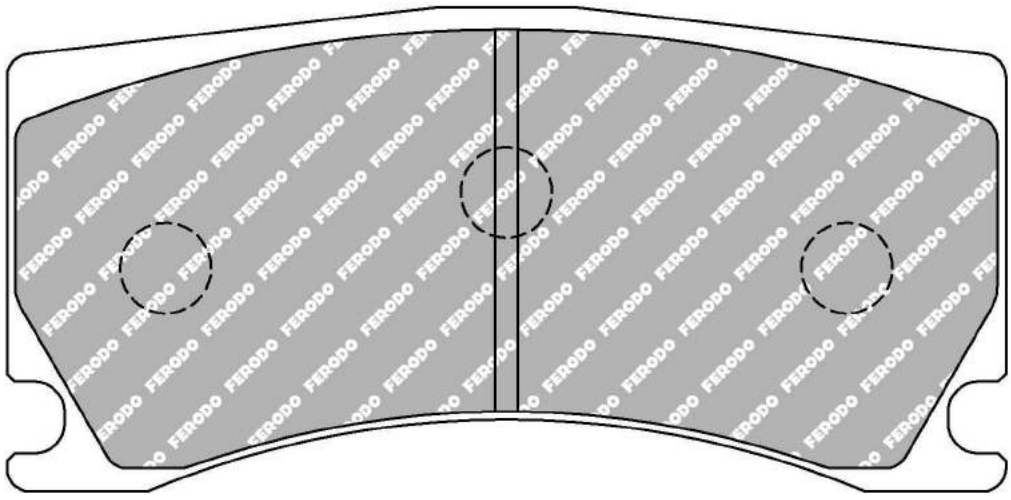

MATERIAL AVAILABILITY						
H	C	R	W	WB	Z	ZB
✔		✉			✉	

CROSS REFERENCE	
ALCON	PNF4498X821S
WVA	24851 15,60

FRP3136


175.6mm = 6.913"

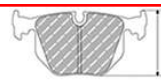
93.2mm = 3.669"


16.9mm = 0.665"


69.0mm = 2.717"

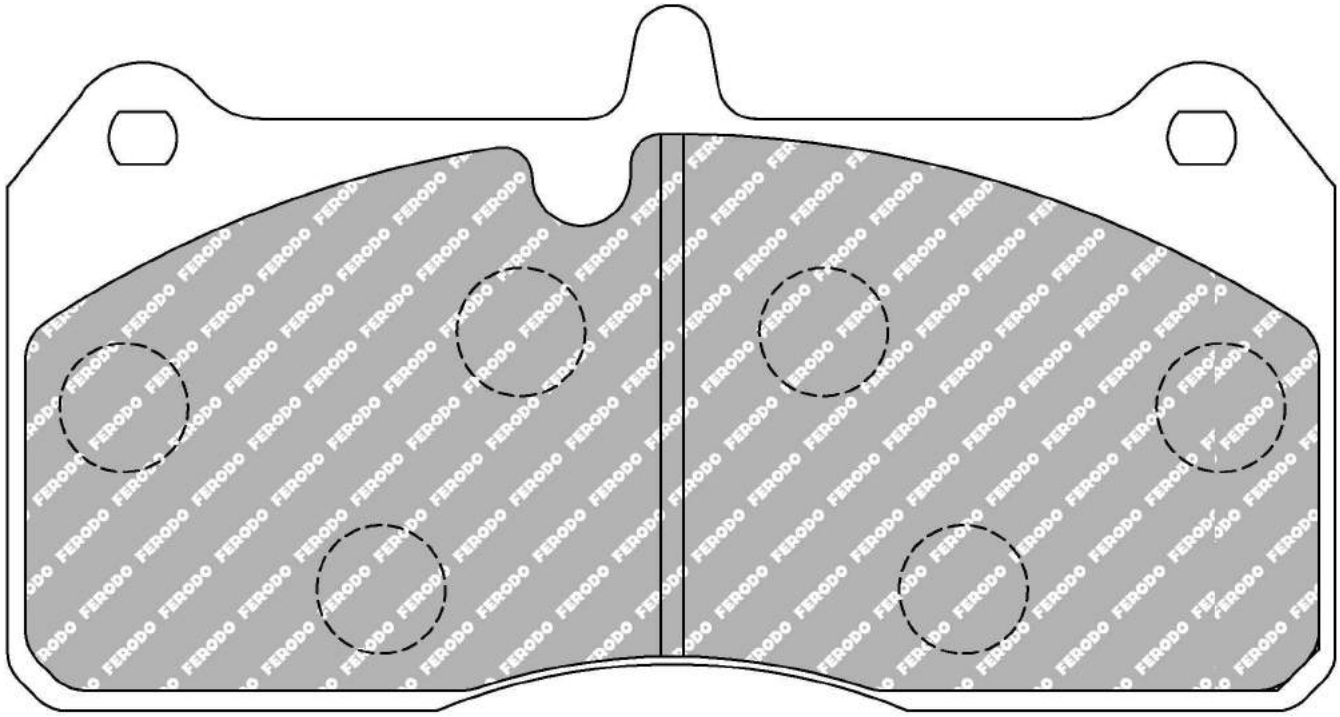

AP Racing Big Brake kit. Holden Commodore SV (2013)

MATERIAL AVAILABILITY						
H	C	R	W	WB	Z	ZB
✔		✔				

CROSS REFERENCE	
AP RACING	CP8318D70

FERODO RACING

Updated on November 2020

Available
Out of Range
In Introduction
Exhausting
Make to order

FRP3137


109.8mm = 4.323"

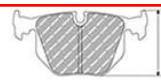
63.0mm = 2.480"


16.0mm = 0.630"


47.0mm = 1.850"

CHEVROLET Rear, FORD Rear

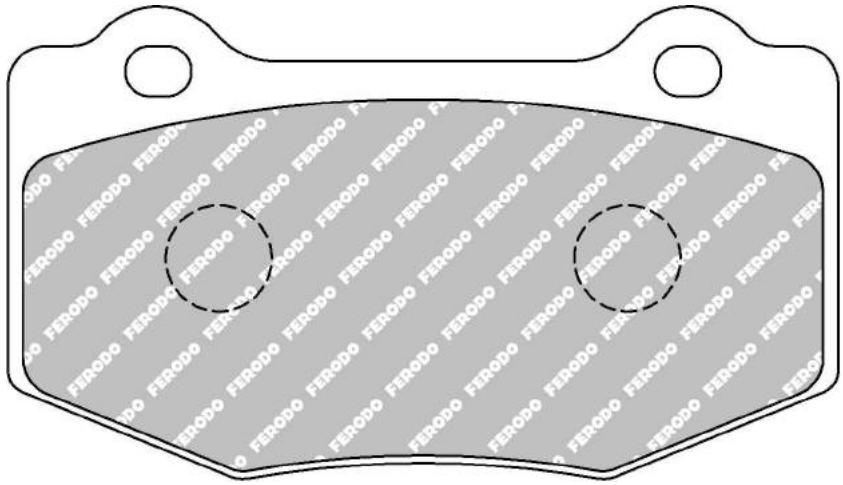

MATERIAL AVAILABILITY						
H	C	R	W	WB	Z	ZB
✔			✔		✉	

CROSS REFERENCE	
PAGID	8208

FRP3138


163.1mm = 6.421"

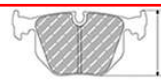
68.8mm = 2.709"


30.0mm = 1.181"


51.8mm = 2.039"

MCLAREN Front

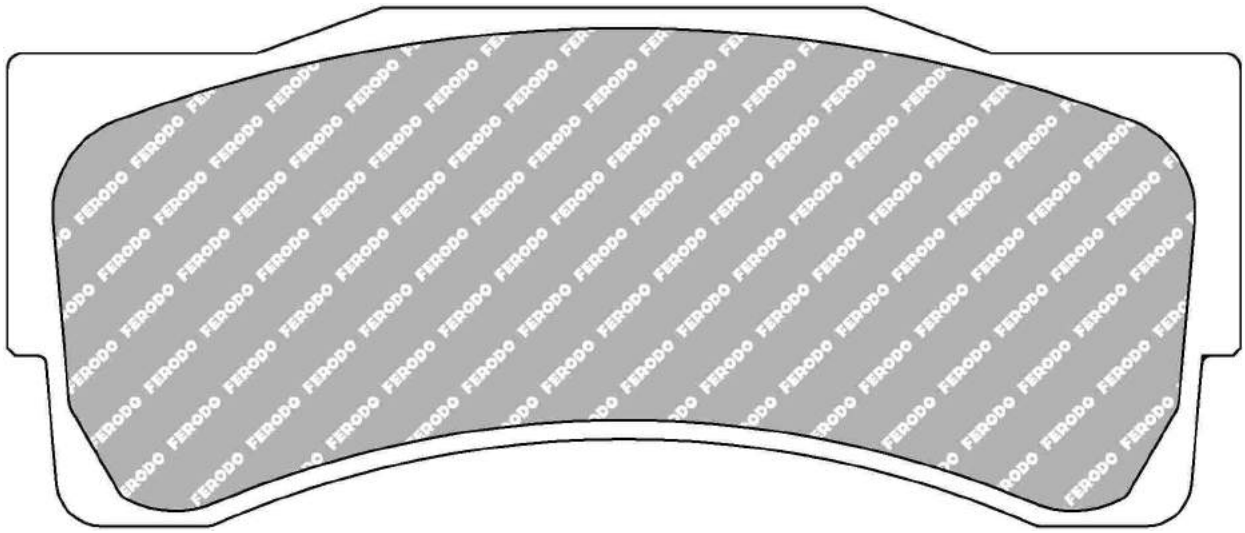

MATERIAL AVAILABILITY						
H	C	R	W	WB	Z	ZB
					✖	✉

✔ Available
✖ Out of Range
↳ In Introduction
⚠ Exhausting
✉ Make to order

FERODO RACING

FRP3139

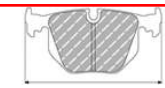
131.8mm = 5.189"

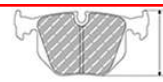
62.2mm = 2.449"


25.0mm = 0.984"


46.5mm = 1.831"

MCLAREN Rear

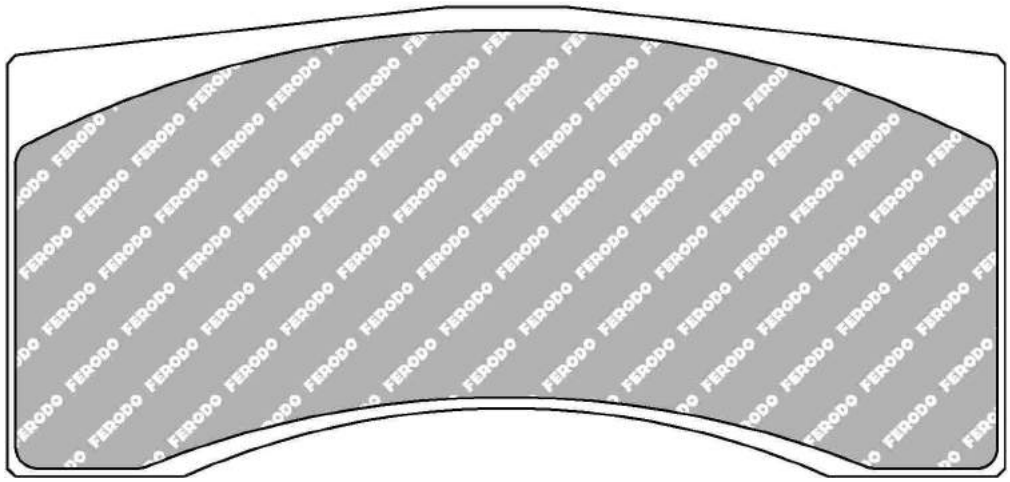

MATERIAL AVAILABILITY						
H	C	R	W	WB	Z	ZB
					✖	✉

FRP3140


139.8mm = 5.504"

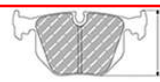
61.4mm = 2.417"


16.0mm = 0.630"


48.4mm = 1.906"

FIAT Front / Rear, FORD Front / Rear, HYUNDAI Front / Rear, SKODA Front / Rear

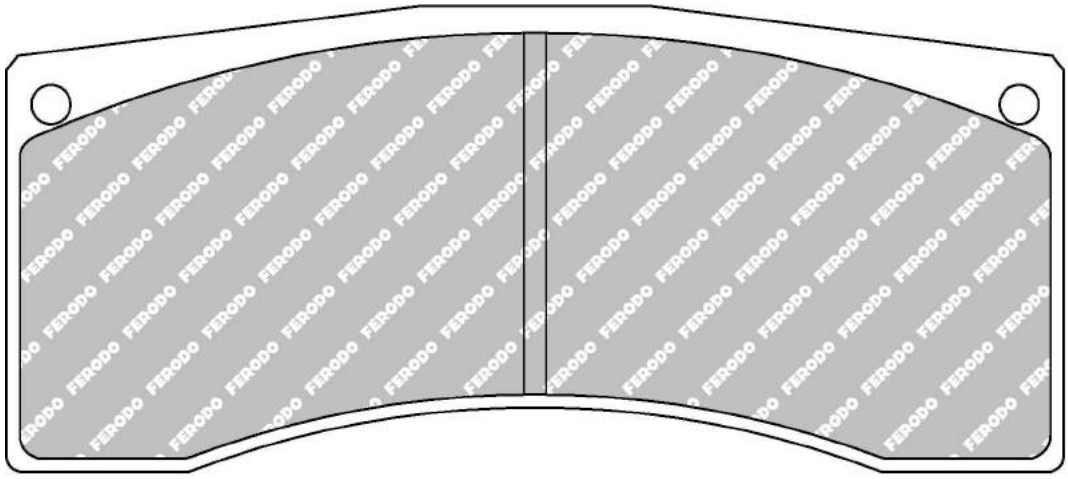

ALSO AVAILABLE		
SHAPE	TH. MM	NOTES
FRP3024	20	
FRP3029	26	
FRP3030	28	
FRP3087	17.5	

MATERIAL AVAILABILITY						
H	C	R	W	WB	Z	ZB
✉		✔			✔	

CROSS REFERENCE	
AP RACING	CP6820D48
BREMBO	B1816
BREMBO	B2616
PAGID	1616
PAGID	1616
PAGID	1617
PAGID	1617

FERODO RACING

Updated on November 2020

✔ Available ⚠ Exhausting
✖ Out of Range ✉ Make to order
In Introduction

FRP3141


172.6mm = 6.795"

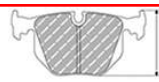
100.6mm = 3.961"


15.0mm = 0.591"


65.5mm = 2.579"

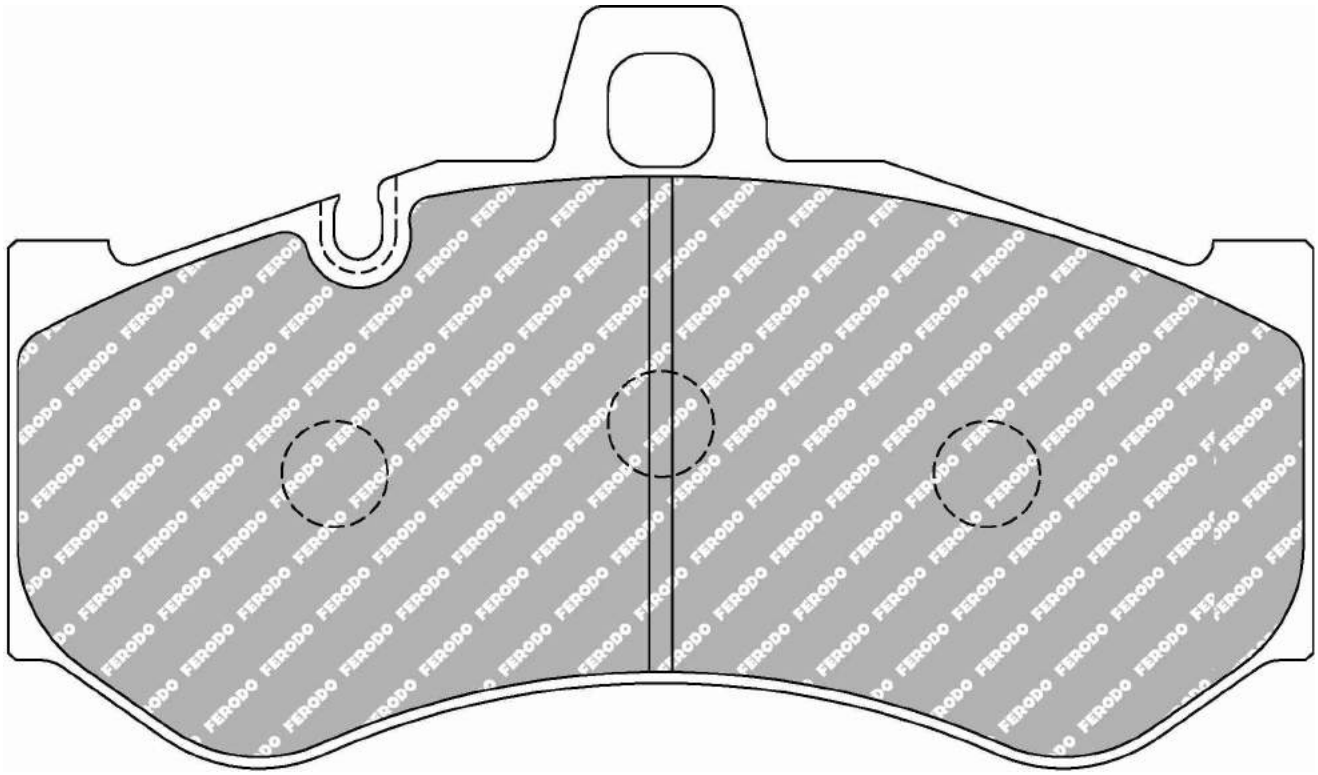

Front Pads for Alcon upgrade kits

MATERIAL AVAILABILITY						
H	C	R	W	WB	Z	ZB
✔						

CROSS REFERENCE	
ALCON	PNF4488X920
PAGID	8043

✔ Available
✖ Out of Range
In Introduction
Exhausting
Make to order

FERODO RACING

Updated on November 2020

FRP3142


152.1mm = 5.988"

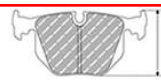
63.8mm = 2.512"


16.0mm = 0.630"


50.8mm = 2.000"

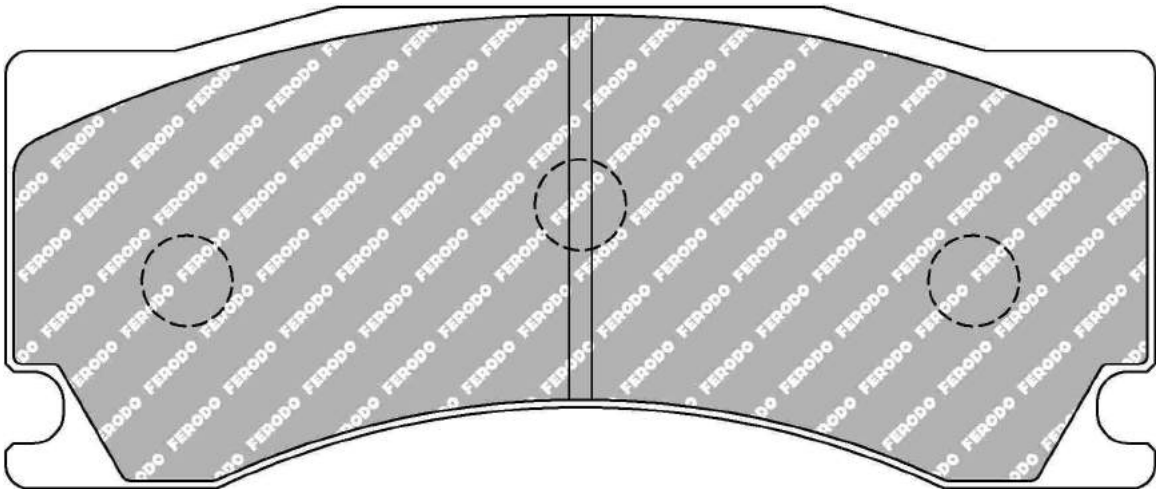

Front Pads for Alcon upgrade kits

ALSO AVAILABLE		
SHAPE	TH. MM	NOTES
FRP3081		For Alcon Kits without caliper pin guides

CROSS REFERENCE	
ALCON	PNF4479X560

MATERIAL AVAILABILITY						
H	C	R	W	WB	Z	ZB
✔						

FERODO RACING
Updated on November 2020

Available
Out of Range
In Introduction
Exhausting
Make to order

FRP3143


130.2mm = 5.126"

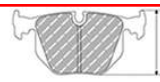
70.0mm = 2.756"


17.0mm = 0.669"


60.4mm = 2.378"

PORSCHE Rear

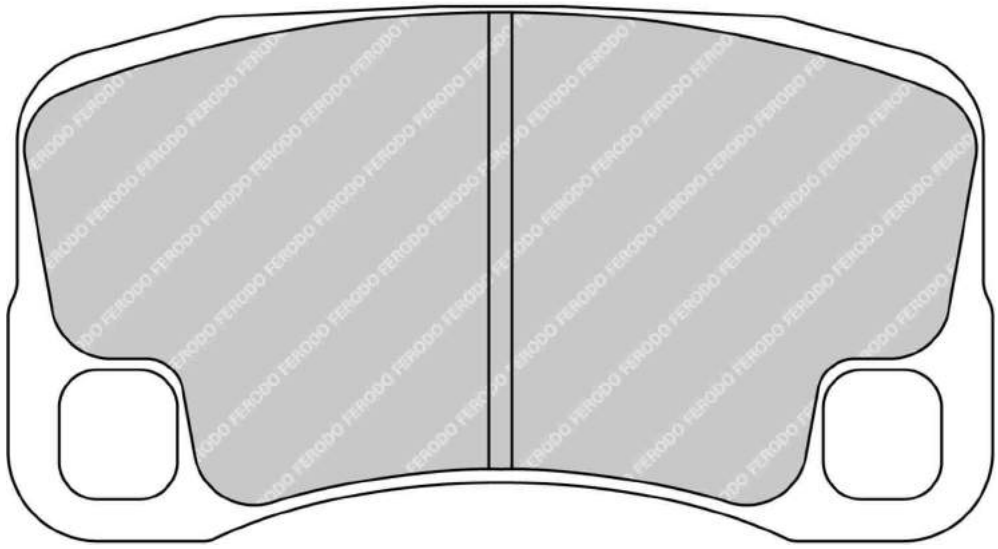

DS2500 (H) configuration shown. Other materials have tab on backplate top edge

ALSO AVAILABLE		
SHAPE	TH. MM	NOTES
FRP3095	19.0	

CROSS REFERENCE	
MINTEX	MDB2937
PAGID	8008
PAGID	T1752

MATERIAL AVAILABILITY						
H	C	R	W	WB	Z	ZB
✉			✉		✖	✉

✔ Available
✖ Out of Range
In Introduction
Exhausting
✉ Make to order

FERODO RACING

FRP3144


152.1mm = 5.988"

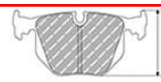
68.9mm = 2.713"


18.0mm = 0.709"


54.0mm = 2.126"

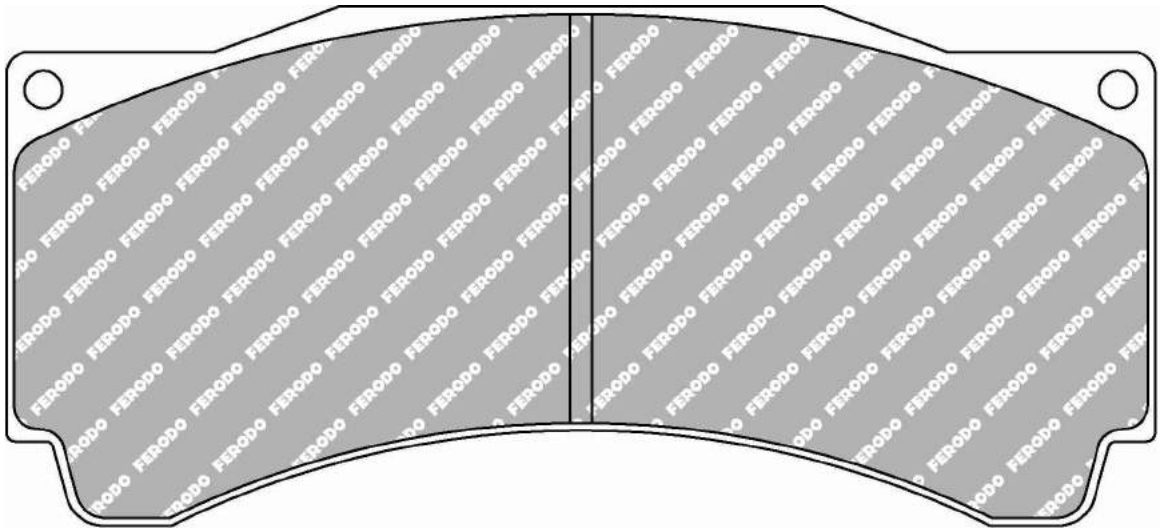

ALSO AVAILABLE		
SHAPE	TH. MM	NOTES
FRP3003	18	with top tab
FRP3014	25	without top tab
FRP3015	28.5	without top tab
FRP3077	17	with top tab
FRP3145	17	without top tab

CROSS REFERENCE	
AP RACING	CP3905D54
PAGID	1904

MATERIAL AVAILABILITY						
H	C	R	W	WB	Z	ZB
✔		✔	✘	✔	✘	✔

FERODO RACING

Updated on November 2020

✔ Available
✘ Out of Range
In Introduction
Exhausting
Make to order

FRP3145


152.1mm = 5.988"

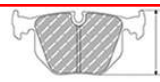
68.9mm = 2.713"


17.0mm = 0.669"


54.0mm = 2.126"

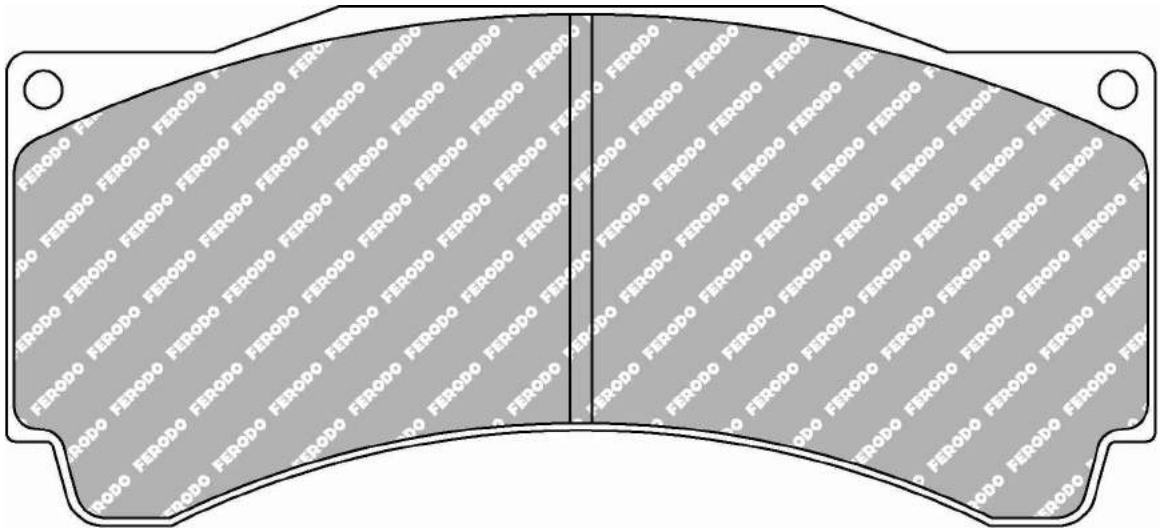

ALSO AVAILABLE		
SHAPE	TH. MM	NOTES
FRP3003	18	with top tab
FRP3014	25	without top tab
FRP3015	28.5	without top tab
FRP3077	17	with top tab
FRP3144	18	without top tab

MATERIAL AVAILABILITY						
H	C	R	W	WB	Z	ZB
		✉	✖	✉	✖	✔

✔ Available
✖ Out of Range
In Introduction
Exhausting
✉ Make to order

FERODO RACING

Updated on November 2020

FRP3146


137.0mm = 5.394"

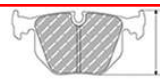
50.8mm = 2.000"


17.2mm = 0.677"


42.9mm = 1.689"

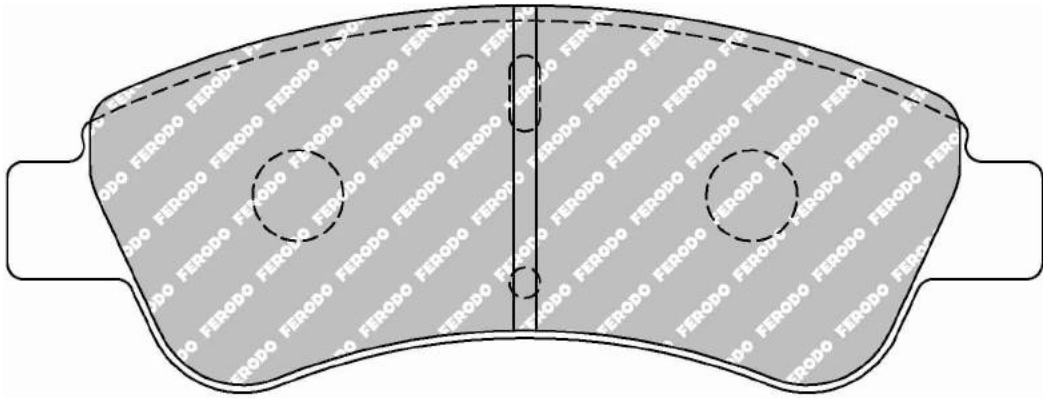

ALSO AVAILABLE		
SHAPE	TH. MM	NOTES
FCP1399	19.0	

MATERIAL AVAILABILITY						
H	C	R	W	WB	Z	ZB

FERODO RACING

Updated on November 2020

Available
Out of Range
In Introduction
Exhausting
Make to order

FRP3147


175.6mm = 6.913"

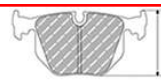
100.8mm = 3.969"


16.8mm = 0.661"


68.5mm = 2.697"

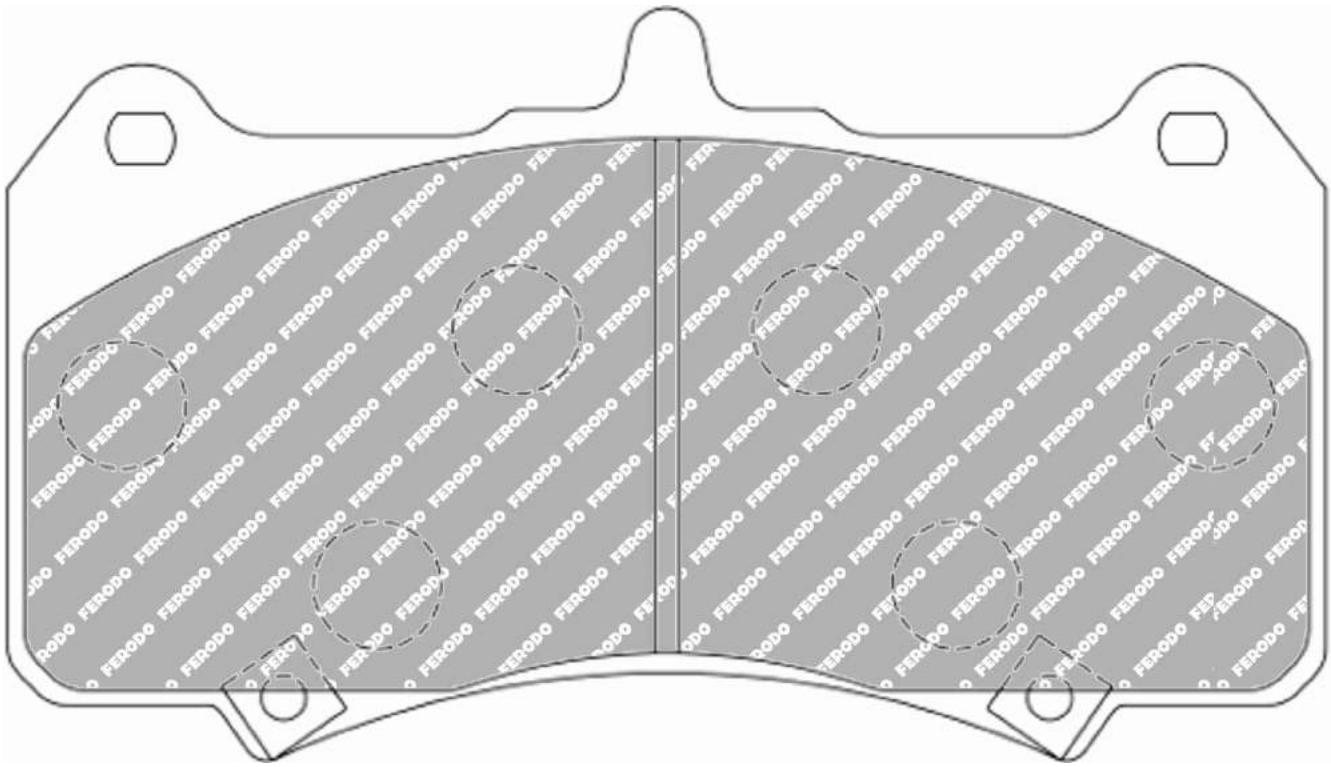

MATERIAL AVAILABILITY						
H	C	R	W	WB	Z	ZB
✔			✔			

CROSS REFERENCE	
AP RACING	CP7555D70

✔ Available
✖ Out of Range
In Introduction
Exhausting
Make to order

FERODO RACING

Updated on November 2020

FRP3148


100.7mm = 3.965"

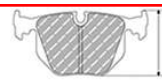
56.2mm = 2.213"


15.2mm = 0.598"


42.5mm = 1.673"

FMSI No: DR22

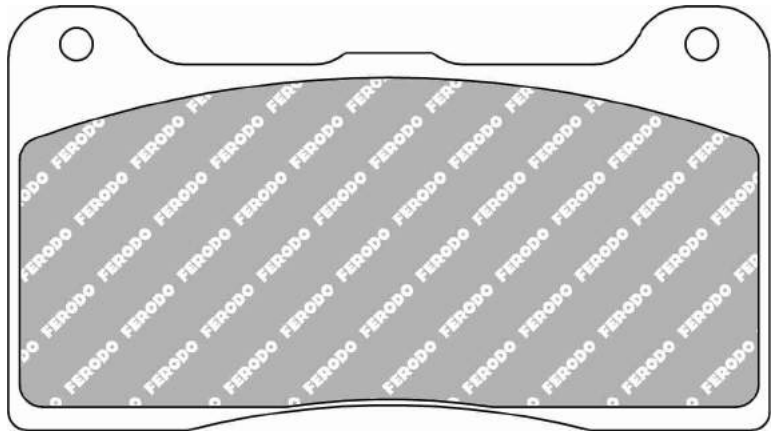

MATERIAL AVAILABILITY						
H	C	R	W	WB	Z	ZB
✔		✔				

CROSS REFERENCE	
EBC	DP4039R
EBC	DP5039NDX
EBC	DP9039
FMSI	DR22
P.MU	F1103
PAGID	2581USA
Raybestos	DR303
Wilwood	7816

FRP3149


100.7mm = 3.965"

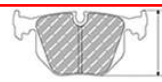
56.2mm = 2.213"


12.5mm = 0.492"


42.5mm = 1.673"

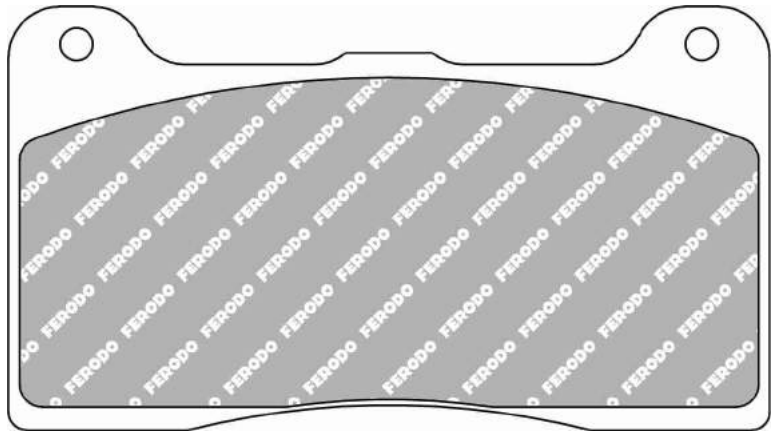

MATERIAL AVAILABILITY						
H	C	R	W	WB	Z	ZB
✔		✔				

CROSS REFERENCE	
Wilwood	15E-9837K
Wilwood	7812

FERODO RACING

Updated on November 2020

✔ Available
✖ Out of Range
In Introduction
Exhausting
Make to order

FRP3150


163.9mm = 6.453"

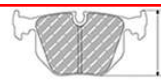
77.7mm = 3.059"


30mm = 1.181"


62mm = 2.441"

BMW Front, HONDA Front

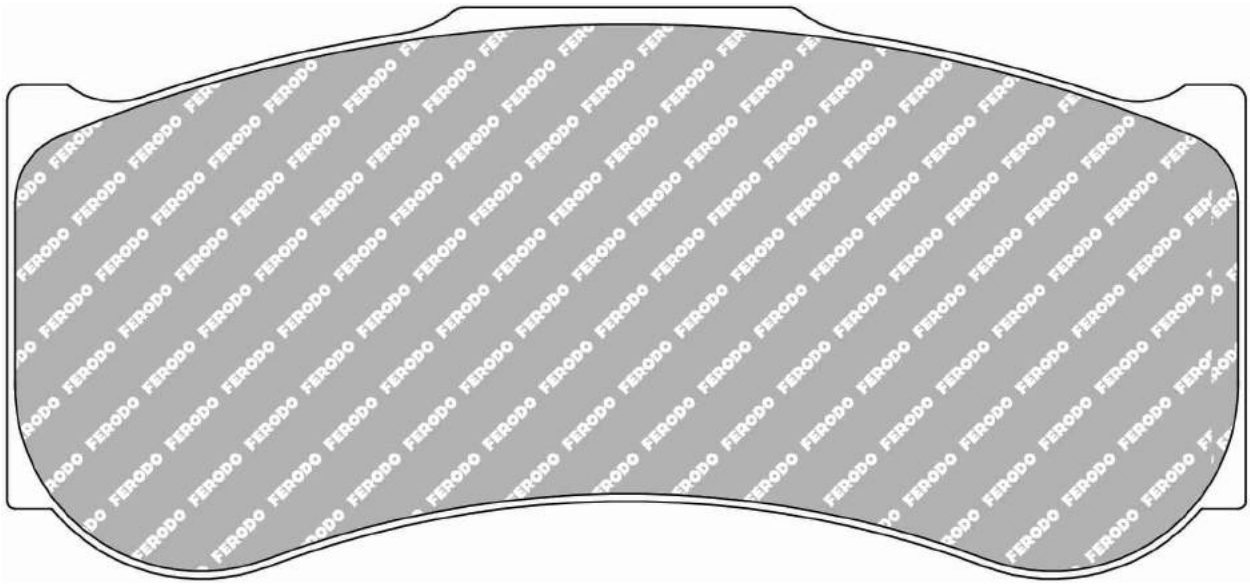

Some stock may still have centre slot

ALSO AVAILABLE		
SHAPE	TH. MM	NOTES
FRP3131	28	

CROSS REFERENCE	
AP RACING	CP6276D62
PAGID	2019

MATERIAL AVAILABILITY						
H	C	R	W	WB	Z	ZB

Available
Out of Range
In Introduction
Exhausting
Make to order

FERODO RACING

Updated on November 2020

FRP3151


168.1mm = 6.618"

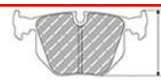
65.2mm = 2.567"


28mm = 1.102"


57mm = 2.244"

PORSCHE Front

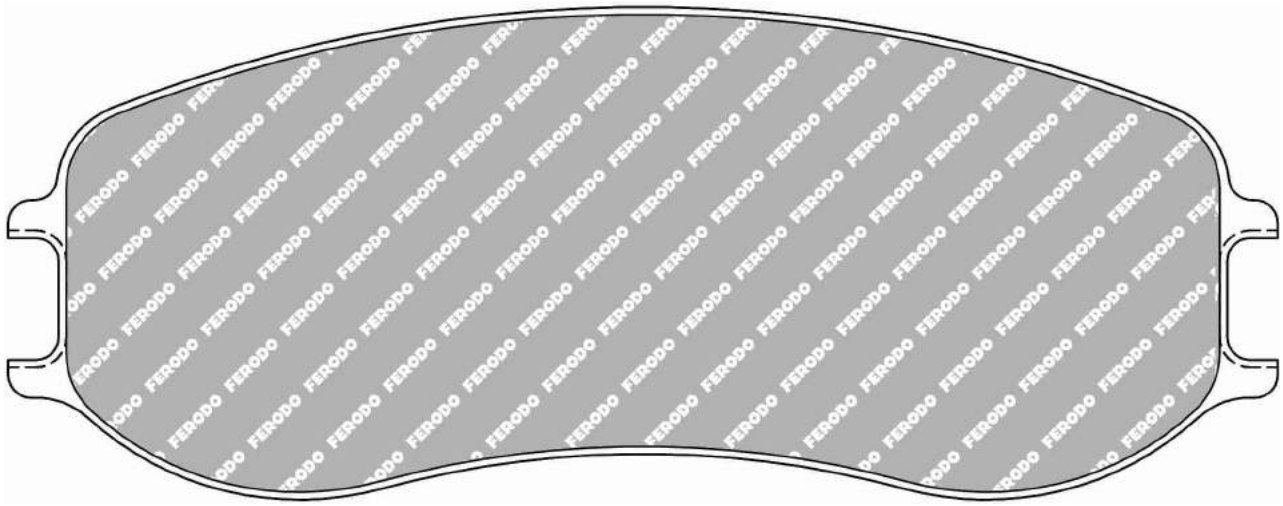

Some stock may still have centre slot

MATERIAL AVAILABILITY						
H	C	R	W	WB	Z	ZB

CROSS REFERENCE	
BREMBO	B7030
PAGID	4928

FRP3152


123.4mm = 4.858"

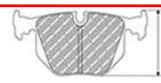
55.3mm = 2.177"


26mm = 1.024"

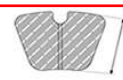
49mm = 1.929"

PORSCHE Rear

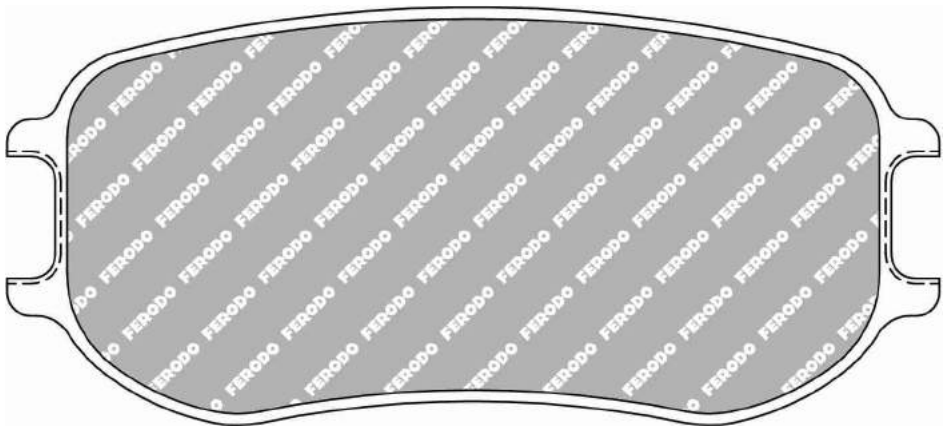

Some stock may still have centre slot

MATERIAL AVAILABILITY						
H	C	R	W	WB	Z	ZB

CROSS REFERENCE	
PAGID	4929

FERODO RACING

Updated on November 2020

Available
Out of Range
In Introduction
Exhausting
Make to order

FRP3153


163.8mm = 6.449"

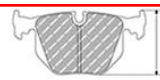
76.9mm = 3.028"


29mm = 1.142"


61.5mm = 2.421"

ASTON MARTIN Front, AUDI Front, BENTLEY Front, BMW Front, CHEVROLET Front, DODGE Front, FERRARI Front, LAMBORGHINI Front, MCLAREN Front

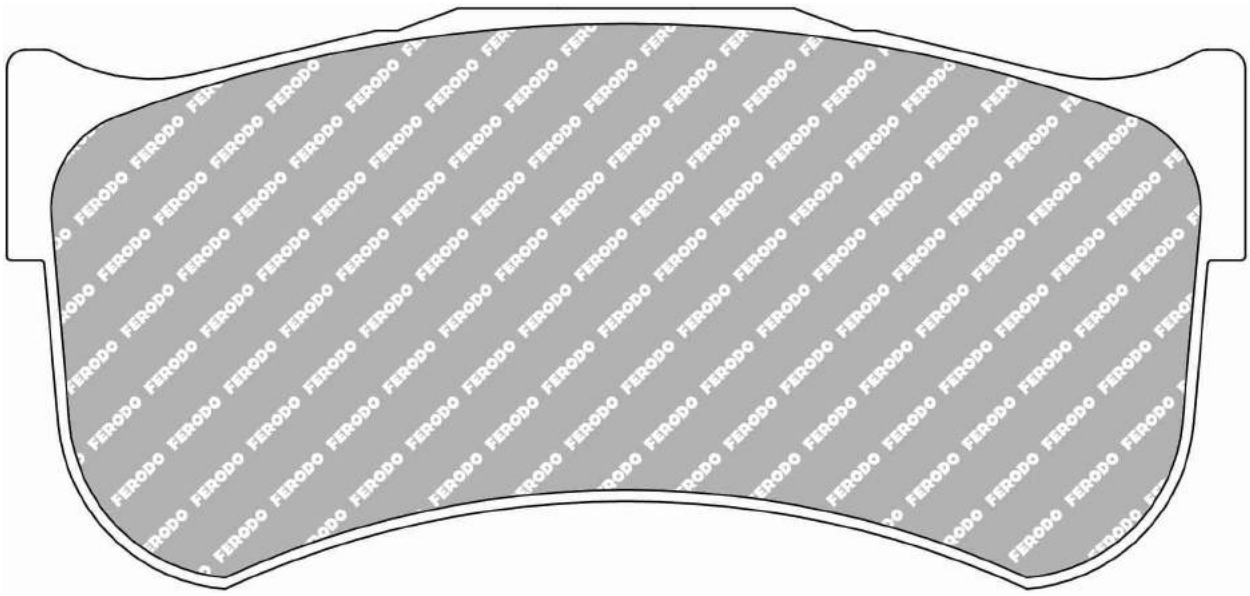

Some stock may still have centre slot

ALSO AVAILABLE		
SHAPE	TH. MM	NOTES
FRP3128	25	

MATERIAL AVAILABILITY						
H	C	R	W	WB	Z	ZB

CROSS REFERENCE	
BREMBO	B2829
HAWK	HB699
PAGID	8100

Available
Out of Range
In Introduction
Exhausting
Make to order

FERODO RACING

Updated on November 2020

FRP3154


133.2mm = 5.244"

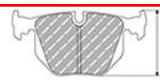
61mm = 2.402"


16.5mm = 0.650"


43mm = 1.693"

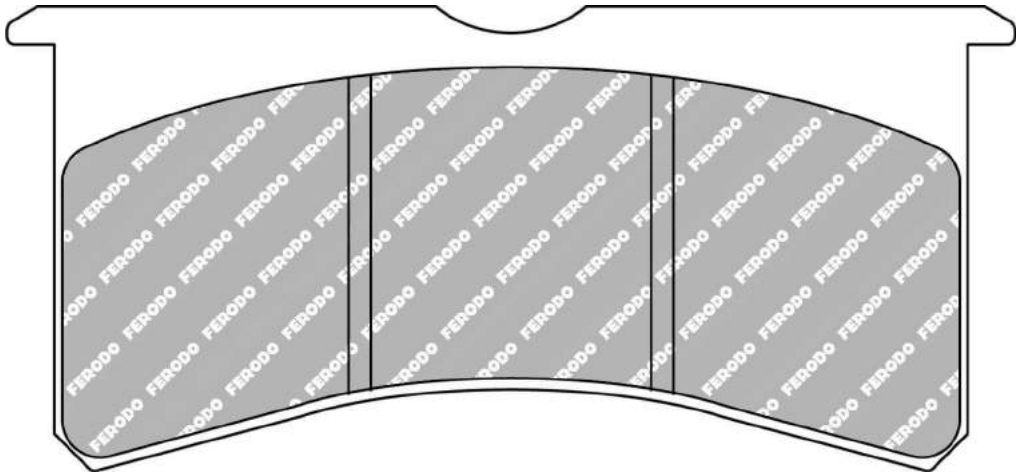

ALSO AVAILABLE		
SHAPE	TH. MM	NOTES
FRP3097	20.4	

MATERIAL AVAILABILITY						
H	C	R	W	WB	Z	ZB

CROSS REFERENCE	
EBC	DP4037R
EBC	DP5037NDX
EBC	DP9037
Wilwood	7416

FERODO RACING

Updated on November 2020

Available
Out of Range
In Introduction
Exhausting
Make to order

FRP3155


163.1mm = 6.421"

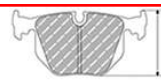
74.4mm = 2.929"


30mm = 1.181"


63.6mm = 2.504"

LEXUS Front, MCLAREN Front, MERCEDES Front, NISSAN Front, PORSCHE Front

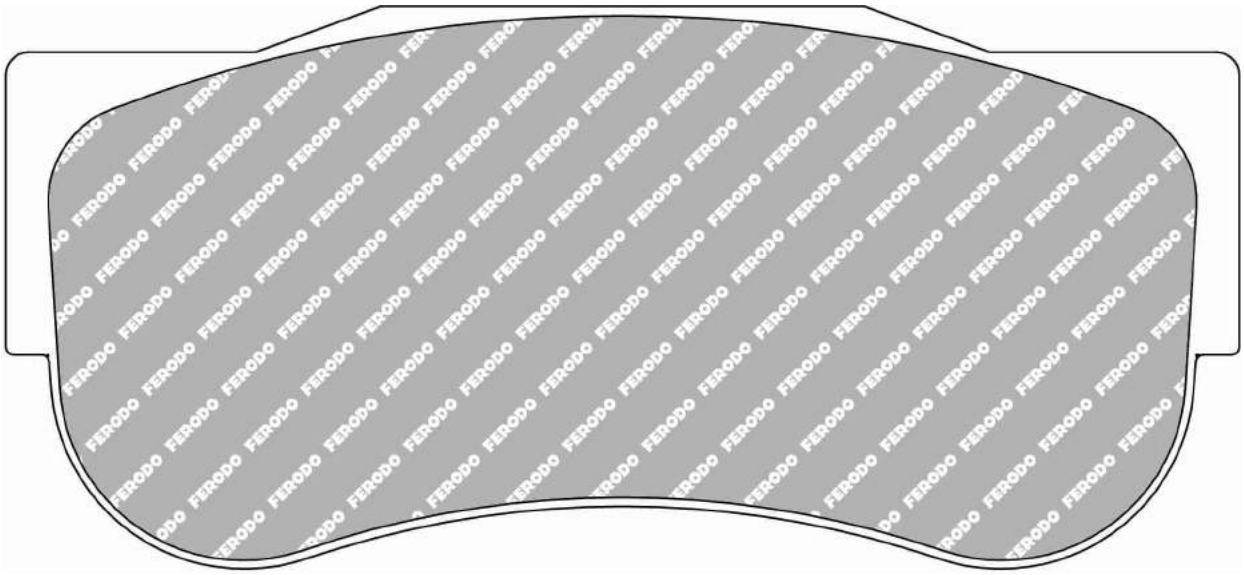

Some stock may still have centre slot

MATERIAL AVAILABILITY						
H	C	R	W	WB	Z	ZB

CROSS REFERENCE	
AP RACING	CP6210D64
BREMBO	B60.30.340
BREMBO	B6030
PAGID	2560

FRP3156


131.8mm = 5.189"

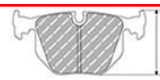
62.2mm = 2.449"


26.5mm = 1.043"


49mm = 1.929"

AUDI Rear, BMW Rear, CHEVROLET Rear, DODGE Rear, FERRARI Rear, LAMBORGHINI Rear, LEXUS Rear, MERCEDES Rear, RENAULT-ALPINE Rear

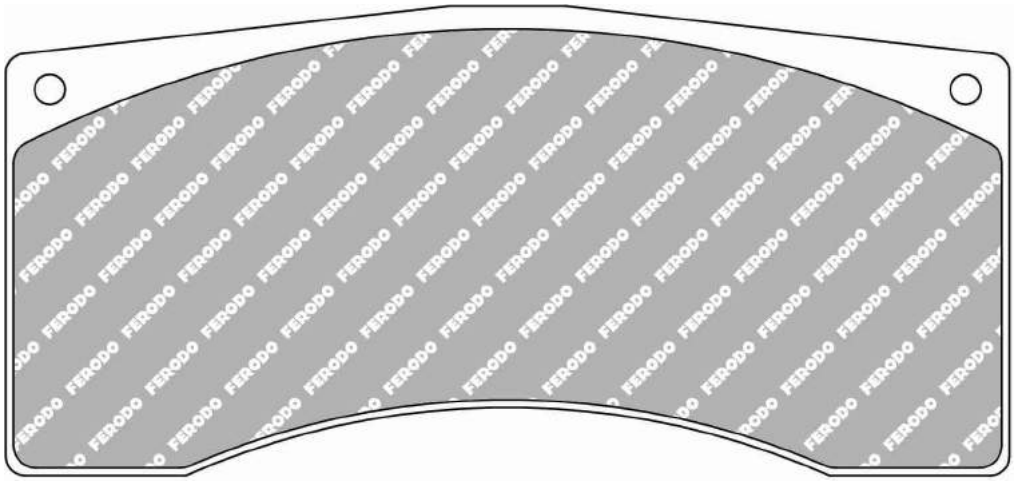

Some stock may still have centre slot.Other material On request

ALSO AVAILABLE		
SHAPE	TH. MM	NOTES
FRP302	20	
FRP1077	16	
FRP1078	25	
FRP3007	18	

CROSS REFERENCE	
PAGID	2704

MATERIAL AVAILABILITY						
H	C	R	W	WB	Z	ZB
						✔

FERODO RACING

Updated on November 2020

Available
Out of Range
In Introduction
Exhausting
Make to order

FRP3157


164mm = 6.457"

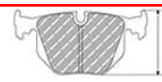
66mm = 2.598"


18mm = 0.709"


50.5mm = 1.988"

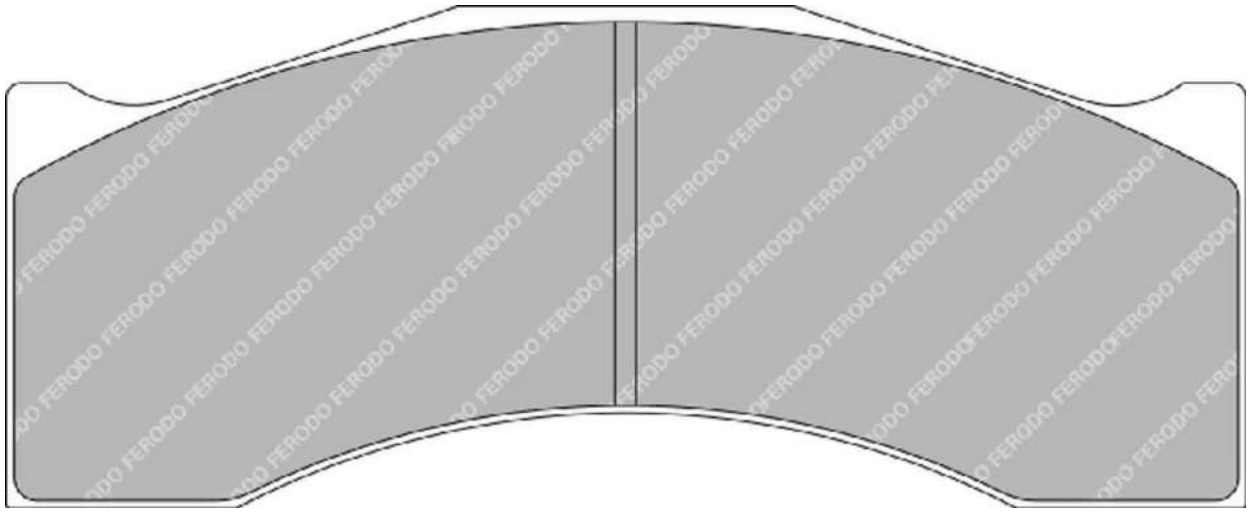

ALSO AVAILABLE		
SHAPE	TH. MM	NOTES
FRP3080	27.8	

MATERIAL AVAILABILITY						
H	C	R	W	WB	Z	ZB

FRP3158


132.8mm = 5.228"

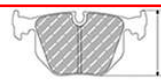
60mm = 2.362"


17.5mm = 0.689"

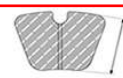
52mm = 2.047"

RENAULT Front

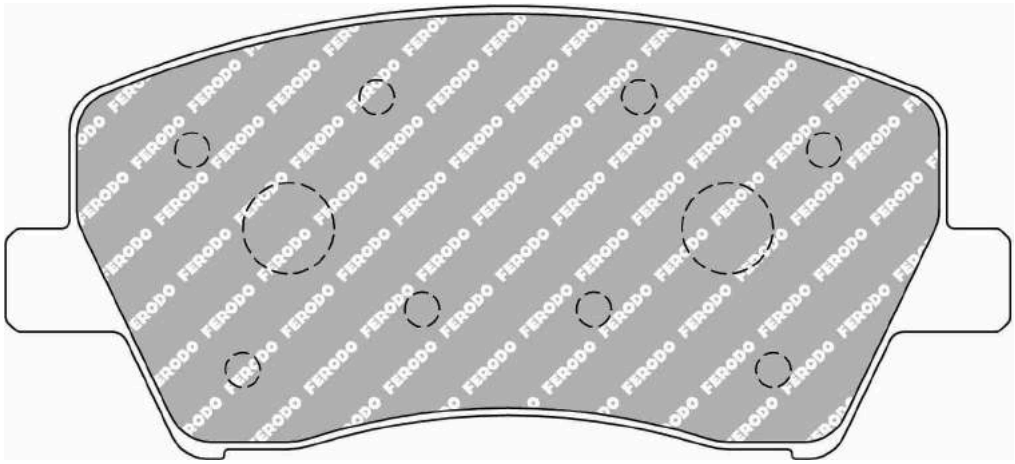

MATERIAL AVAILABILITY						
H	C	R	W	WB	Z	ZB

Available
Out of Range
In Introduction
Exhausting
Make to order

FERODO RACING

Updated on November 2020

FRP5001


60.0mm = 2.362"

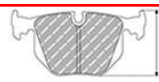
64.0mm = 2.520"


18.2mm = 0.717"


64.6mm = 2.543"

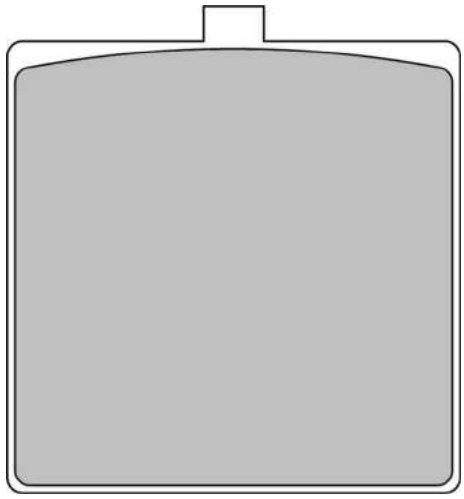

MGB705:PLEASE NOTE that this pad can be cut to fit MGB704 (rear caliper)

MATERIAL AVAILABILITY						
H	C	R	W	WB	Z	ZB

FRP5002


76.7mm = 3.020"

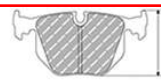
60.0mm = 2.362"


17.1mm = 0.673"

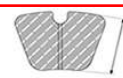
50.0mm = 1.969"

LOTUS Front / Rear

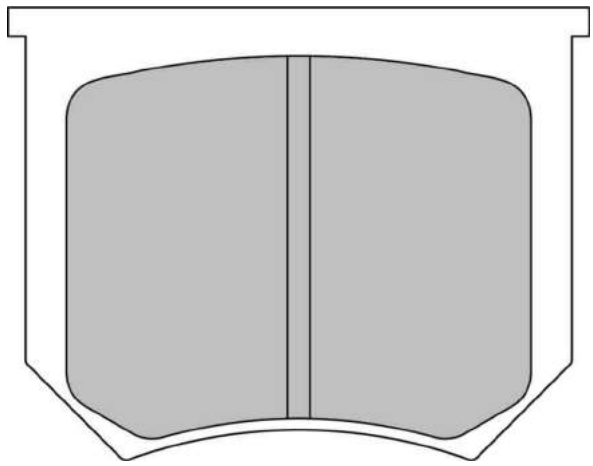

GD504:Historical Cars

MATERIAL AVAILABILITY						
H	C	R	W	WB	Z	ZB
		✔				

CROSS REFERENCE	
EBC	DP2035
PAGID	8032

FERODO RACING

Updated on November 2020

Available
Out of Range
In Introduction
Exhausting
Make to order

FERODO®

BRAKE PADS XREF
COMPETITORS TO FERODO



FERODO®
RACING

BRAKE PADS X-REF COMPETITORS TO FERODO

AKEBONO	Ferodo
AN - 334K	FRP3127

ALCON	Ferodo
0084	FRP3053
3435	FRP101
4441	FRP1078
PNF0084X222	FRP3027
PNF0084X222.4	FRP3027
PNF0084X232.4	FCP1280
PNF0084X233.4	FCP1281
PNF0084X235	FCP685
PNF0084X235.4	FCP685
PNF0084X236.4	FCP1283
PNF0084X245.4	FRP216
PNF0084X249.4	FCP986
PNF0084X261.4	FCP558
PNF0084X262.4	FCP845
PNF0084X264.4	FRP201
PNF0084X268.4	FCP1334
PNF0084X276.4	FRP3018
PNF0084X282.4	FRP1064
PNF0084X283.4	FRP3004
PNF0084X284	FRP502
PNF0084X284.4	FRP502
PNF0084X298.4	FCP1372
PNF0084X299.4	FCP1133
PNF0084X305.4	FRP3025
PNF0084X317.4	FCP558
PNF0084X321.4	FCP1378
PNF0084X322.4	FRP1079
PNF0084X325.4	FCP1081
PNF0084X331	FRP216
PNF0084X331.4	FRP216
PNF0084X336.4	FRP3067
PNF0084X347.4	FCP857
PNF0084X350.4	FRP503
PNF0084X358.4	FCP1562
PNF0084X359.4	FCP1334
PNF0084X363.4	FCP1636
PNF3430X275.4	FRP3043
PNF3451X521.4	FCP809
PNF3451X522	FCP810
PNF3451X522.4	FCP810
PNF3451X554.4	FCP810
PNF3451X555.4	FCP809
PNF3451X566.4	FCP810
PNF4436X508.4	FCP451
PNF4436X509	FRP3069
PNF4436X509.4	FRP3069
PNF4441X723	FRP1077
PNF4441X723.4	FRP1077
PNF4441X728	FRP302
PNF4441X728.4	FRP302
PNF4441X753	FRP1077
PNF4441X753S.4	FRP1077
PNF4441X754	FRP302

ALCON	Ferodo
PNF4441X754.4	FRP302
PNF4441X757.4	FRP302
PNF4441X769.4	FRP1077
PNF4463X529	FRP219
PNF4463X529.4	FRP219
PNF4463X551	FRP218
PNF4463X551.4	FRP218
PNF4463X554	FRP201
PNF4463X554.4	FRP201
PNF4463X572	FRP219
PNF4463X581.4	FRP201
PNF4476X545	FRP3009
PNF4476X545.4	FRP3009
PNF4476X549	FRP3012
PNF4476X549.4	FRP3012
PNF4479X560	FRP3142
PNF4488X920	FRP3141
PNF4489X519.4	FRP3000
PNF4489X532.4	FRP3003
PNF4489X543	FRP3015
PNF4489X545.4	FRP3054
PNF4489X562.4	FRP3000
PNF4489X565.4	FRP3000
PNF4493X501.4	FRP3026
PNF4493X502	FRP3026
PNF4493X503	FRP3026
PNF4493X603	FRP3044
PNF4493X603.12	FRP3044
PNF4493X603.4	FRP3044
PNF4493X610.12	FRP3044
PNF4493X610.4	FRP3044
PNF4495X501.4	FRP3039
PNF4495X514.4	FRP3037
PNF4495X516.4	FRP3037
PNF4495X517.4	FRP3055
PNF4495X518.4	FRP3055
PNF4497X607.4	FRP3081
PNF4497X617.4	FRP3081
PNF4497X831S	FRP3134
PNF4498X703.4	FRP3082
PNF4498X705.4	FRP3082
PNF4498X821S	FRP3135

AP RACING	Ferodo
5820	FRP3040
639	FCP1298
735	FCP308
747	FRP3033
780	FCP1281
CP2195D38	FCP342
CP2270D50	FRP203
CP2279D42	FRP3073
CP2279D50	FRP212
CP2340D38	FRP3021
CP2340D43	FRP218
CP2340D51	FRP201

AP RACING	Ferodo
CP2373	FRP202
CP2382	FRP202
CP2383	FRP202
CP2384	FRP202
CP2399D43	FCP825
CP2712D44	FCP840
CP2749D55 (28 mm)	FRP3060
CP2749D66 (28 mm)	FRP3059
CP3215D42	FRP3018
CP3215D46	FRP3091
CP3215D50	FRP216
CP3345D44	FRP219
CP3558D46	FRP1060
CP3558D51	FRP3061
CP3558D54	FRP3014
CP3714D54	FRP217
CP3796D54	FRP3006
CP3894D46	FRP3000
CP3894D51 (18 mm)	FRP3054
CP3894D54	FRP3003
CP3905D54	FRP3144
CP3915D33	FCP1560
CP4140D36	FRP3001
CP4296D43	FRP1061
CP4595D54	FRP3015
CP4751D43	FRP501
CP4848D46 (18 mm)	FRP3086
CP5070D51	FRP3076
CP5070D54	FRP3077
CP5119D50	FCP1562
CP5119D50	FRP3056
CP5148D46	FRP3020
CP5148DXX	FRP3086
CP5788D48	FRP3024
CP5788D48	FRP3029
CP5805D45	FRP503
CP6070D49	FRP1078
CP6210D54 (28 mm)	FRP3037
CP6210D54 (30 mm)	FRP3055
CP6210D64	FRP3155
CP6230D54 (25 mm)	FRP3039
CP6268D62	FRP3131
CP6276D62	FRP3150
CP6600D50	FRP3107
CP6600D55	FRP3083
CP6627D51	FRP3115
CP6820D48	FRP3140
CP7031D32	FRP3102
CP7040D54	FRP3114
CP7040D61	FRP3084
CP7555D70	FRP3147
CP7600D46	FRP3085
CP8250-D41	FRP3097
CP8250D50	FRP3116
CP8310D70	FRP3027
CP8318D70	FRP3136

ATE	Ferodo
13.0470-7167.2	FCP1628

BOSCH	Ferodo
0986494659	FCP4434

BREMBO	Ferodo
07.1715.50	FCP2
07.4865.1	FCP1281
07.4865.80	FCP1281
07.5064.27	FRP308
07.5064.49	FRP1079
07.5064.7	FRP308
07.5064.72	FRP308
07.5064.73	FRP308
07.5064.8	FRP1079
07.5064.82	FRP1079
07.5064.84	FRP1079
07.5139	FRP3032
07.5139.0	FRP1077
07.5139.07	FRP1077
07.5139.19	FRP1077
07.5139.3	FRP1078
07.5139.34	FRP1078
07.5139.6	FRP302
07.5139.65	FRP302
07.5139.69	FRP302
07.5139.81	FRP1078
07.5139.85	FRP3032
07.5139.88	FRP3032
07.5146.30	FCP1348
07.5146.31	FCP1348
07.5169.9	FRP3024
07.5169.90	FRP3024
07.5169.92	FRP3024
07.5308.9	FRP3042
07.5308.91	FRP3042
07.5505.91	FCP1562
07.5684.2	FRP1058
07.5684.2	FRP1064
07.5684.25	FRP1064
07.5684.26	FRP1064
07.5684.5	FRP3022
07.5684.5	FRP3023
07.5684.52	FRP3022
07.5684.53	FRP3023
07.5684.55	FRP3023
07.5684.56	FRP3022
07.5684.8	FRP3033
07.5684.80	FRP3033
07.5684.81	FRP3033
07.5868	FRP1059
07.5868.2	FRP3004
07.5868.29	FRP3004
07.6953.9	FCP1348
07.6955.3	FRP3053
07.6955.30	FRP3053

FERODO RACING

Updated on November 2020

BRAKE PADS X-REF COMPETITORS TO FERODO

BREMBO	Ferodo
07.6955.31	FRP3053
07.6955.50	FRP3088
07.7235.60	FCP721
07.7275.68	FCP1334
07.7293.6	FRP3031
07.7293.60	FRP3031
07.7293.61	FRP3031
07.7293.63	FRP3031
07.7293.7	FRP3110
07.7293.70	FRP3031
07.7614.2	FRP3040
07.7614.20	FRP3040
07.7614.21	FRP3040
07.7614.3	FRP3046
07.7614.30	FRP3046
07.7614.31	FRP3046
07.7810.1	FRP3035
07.7810.10	FRP3035
07.7810.11	FRP3035
07.7810.2	FRP3034
07.7810.20	FRP3034
07.7810.21	FRP3034
07.7810.3	FRP3045
07.7810.30	FRP3045
07.7810.31	FRP3045
07.7858.30-40	FCP1562
07.7859.1	FRP3029
07.7859.10	FRP3029
07.7859.11	FRP3029
07.7859.2	FRP3030
07.7859.20	FRP3030
07.7859.21	FRP3030
07.7859.60	FRP3087
07.7859.70	FRP3087
07.7869.12	FRP3070
07.8300.00	FCP905
07.8300.01	FCP776
07.8300.02	FCP775
07.8300.04	FCP1094
07.8300.07	FCP691
07.8300.09	FCP725
07.8300.10	FCP779
07.8300.11	FCP856
07.8300.12	FCP867
07.8300.14	FCP590
07.8300.15	FCP986
07.8300.17	FCP748
07.8300.18	FCP761
07.8300.20	FCP1430
07.8300.23	FCP748
07.8300.24	FCP1213
07.8300.26	FCP1430
07.8300.33	FCP1436
07.8300.38	FCP590
07.8300.40	FCP590
07.8300.42	FCP1327

BREMBO	Ferodo
07.8301.00	FCP1063
07.8301.02	FCP173
07.8301.03	FCP206
07.8301.04	FCP276
07.8301.05	FCP360
07.8301.06	FCP370
07.8301.07	FCP385
07.8301.08	FCP392
07.8301.09	FCP393
07.8301.10	FCP406
07.8301.11	FCP409
07.8301.12	FCP392
07.8301.13	FCP434
07.8301.14	FCP519
07.8301.15	FCP524
07.8301.16	FCP535
07.8301.17	FCP541
07.8301.18	FCP565
07.8301.19	FCP584
07.8301.21	FCP596
07.8301.21	FCP1676
07.8301.22	FCP598
07.8301.23	FCP600
07.8301.24	FCP602
07.8301.25	FCP613
07.8301.26	FCP617
07.8301.28	FCP685
07.8301.29	FCP732
07.8301.30	FCP766
07.8301.32	FCP774
07.8301.33	FCP777
07.8301.34	FCP789
07.8301.35	FCP845
07.8301.36	FCP859
07.8301.37	FCP876
07.8301.38	FCP881
07.8301.39	FCP925
07.8301.41	FCP1049
07.8301.42	FCP1050
07.8301.43	FCP1052
07.8301.45	FCP1056
07.8301.46	FCP1063
07.8301.48	FCP1068
07.8301.49	FCP392
07.8301.50	FCP779
07.8301.51	FCP1081
07.8301.52	FCP1082
07.8301.53	FCP1093
07.8301.55	FCP1113
07.8301.56	FCP1133
07.8301.57	FCP1134
07.8301.59	FCP1160
07.8301.60	FCP1162
07.8301.61	FCP1281
07.8301.62	FCP1288
07.8301.63	FCP775

BREMBO	Ferodo
07.8301.64	FCP1293
07.8301.65	FCP1295
07.8301.68	FCP725
07.8301.69	FCP850
07.8301.71	FCP774
07.8301.72	FCP1318
07.8301.73	FCP590
07.8301.74	FCP1334
07.8301.76	FCP1368
07.8301.77	FCP1376
07.8301.78	FCP1378
07.8301.79	FCP1467
07.8301.80	FCP1468
07.8301.84	FRP3067
07.8301.88	FCP1499
07.8301.89	FCP1573
07.8301.90	FCP1444
07.8301.91	FCP1543
07.8301.92	FCP1568
07.8365.33	FRP3100
07.8590.15	FRP3106
07.8645.16	FCP1281
07.8715.36	FRP3067
07.8720.XX	FCP1348
07.9184.45	FCP1298
07.9209.xx	FRP3100
07.9312.44	FCP1664
07.9312.45	FCP1664
07.9312.46	FCP1664
07.9312.47	FCP1664
07.9551.13	FRP3098
07.A010.10	FRP3113
07.A262.20	FRP3103
07.B314.30	FCP1281
07.B314.58	FRP3099
07.B314.59 (Th 16.8)	FRP3098
7767.XX.17	FRP216
B0816	FRP3071
B0916	FRP1079
B0920	FRP308
B1016	FRP3103
B1114	FRP3109
B1316	FRP1077
B1325	FRP1078
B1517	FRP3028
B1816	FRP3140
B1817	FRP3087
B1820	FRP3024
B1820	FRP3024
B1826	FRP3029
B1926	FRP3053
B2130	FRP3046
B2230	FRP3080
B2422	FRP3123
B2425	FRP3110
B2429	FRP3031

BREMBO	Ferodo
B2616	FRP3140
B2617	FRP3087
B2620	FRP3024
B2620	FRP3024
B2825	FRP3128
B2829	FRP3153
B5118	FRP3003
B5125	FRP3014
B5128	FRP3015
B5217	FRP216
B5220	FRP212
B5417	FRP3018
B5525	FRP3039
B5528	FRP3037
B5530	FRP3055
B60.30.340	FRP3155
B6030	FRP3155
B6215	FRP3067
B6315	FCP1667
B6417	FRP3098
B6517	FRP3099
B6619	FRP3096
B6719	FRP3095
B7030	FRP3151
P 28 089	FCP5086
P23133	FCP4308
P83 024	FCP1021
P83 048	FCP1456
P83 049	FCP1457
P83 066	FCP1698
P85124	FCP4697
XA4.17.M4	FRP3109
XA5.71.M2	FRP3099
XA7.G0.11	FCP4168
XA7.G0.12	FCP4168

CL BRAKES	Ferodo
4000	FCP845
4001	FCP560
4002	FCP451
4003	FCP11
4004	FCP2
4005	FCP881
4005	FCP891
4007	FCP393
4009	FCP105
4010	FCP596
4011	FCP774
4011	FCP775
4014	FCP399
4016	FCP206
4018	FCP789
4019	FCP790
4020	FCP1133
4021	FCP385
4021	FCP392

BRAKE PADS X-REF COMPETITORS TO FERODO

CL BRAKES	Ferodo
4022	FCP721
4023	FCP276
4023	FCP1323
4025	FCP256
4027	FCP565
4028	FCP370
4029	FCP1327
4031	FCP1068
4032	FCP850
4033	FCP779
4033	FCP1073
4034	FCP558
4035	FCP408
4036	FCP584
4037	FCP586
4038	FCP541
4038	FCP726
4044	FCP905
4049	FCP1308
4056	FCP3
4059	FCP1333
4060	FCP116
4060	FCP1562
4061	FCP1298
4061	FCP1561
4062	FCP72
4066	FCP1334
4069	FCP1372
4077	FCP777
4083	FCP598
4085	FCP167
4088	FCP1094
4102	FCP761
4104	FCP1300
4106	FCP1012
4107	FCP1011
4114	FCP9
4126	FRP3096
5000W38T10	FCP342
5001W43T14	FCP825
5002W43T14	FCP809
5002W48T14	FCP810
5005W50TX	FRP1077
5008W52T18	FCP1281

EBC	Ferodo
DP108	FCP9
DP114	FCP809
DP1958	FCP1441
DP2035	FRP5002
DP21588	FCP1808
DP21758	FCP4187
DP21789	FCP4080
DP21882	FCP4671
DP21995-DP31995	FCP4218
DP2291	FCP167

EBC	Ferodo
DP2325	FCP173
DP4002	FRP216
DP4037R	FRP3154
DP4039R	FRP3148
DP4057	FRP3108
DP41657	FCP1698
DP4413R	FRP3078
DP4993	FCP1457
DP5037NDX	FRP3154
DP5039NDX	FRP3148
DP617	FCP408
DP680	FCP541
DP753	FCP399
DP9037	FRP3154
DP9039	FRP3148
DPX2002	FCP4426

ENDLESS	Ferodo
EP472	FCP4187
RCP100	FRP3083

FMSI	Ferodo
D004	FCP9
D005	FCP825
D009	FCP815
D0109	FCP448
D027	FCP823
D031	FCP2
D044	FCP809
D045	FCP11
D052	FRP3057
D058	FCP2
D064	FCP342
D081	FCP832
D096	FCP105
D1001	FCP1334
D1001	FRP3067
D1016	FCP1334
D1017	FCP541
D1018	FCP1655
D1029	FCP1664
D1050	FCP1334
D1053	FCP721
D1078	FCP1984
D1081	FRP3129
D1082	FRP3130
D109	FCP116
D1107	FCP1641
D1108	FCP1636
D1114	FCP1947
D1116	FRP3100
D1124	FCP4187
D1170	FCP1808
D1204	FCP4080
D125	FCP351
D127	FCP93

FMSI	Ferodo
D1291	FCP4468
D1308	FCP1747
D1309	FCP1806
D1346	FCP4172
D1347	FCP4173
D135	FCP817
D1368	FCP4168
D1371	FCP4218
D1372	FCP4217
D1382	FRP3106
D1389	FCP4805
D1395	FCP5030
D1405	FRP3133
D1454	FCP4426
D147	FCP370
D154	FRP3058
D1576	FCP4671
D1609	FCP4611
D163	FCP399
D1651	FCP1667
D1656	FCP4663
D174	FCP116
D1740	FCP4665
D1741	FCP4664
D202	FRP3058
D227	FCP774
D227	FCP775
D228	FCP596
D242	FCP308
D253	FCP256
D272	FCP638
D278	FCP1133
D279	FCP296
D280	FCP392
D283	FCP372
D287	FCP11
D290	FCP775
D292	FCP845
D298	FCP276
D30	FCP3
D306	FCP541
D307	FCP385
D313	FRP3057
D319	FCP487
D323	FCP638
D330	FCP167
D331	FCP483
D340	FCP541
D340	FCP726
D341	FCP748
D345	FCP451
D350	FCP206
D350	FCP1081
D356	FCP308
D369	FCP1213
D371	FCP393

FMSI	Ferodo
D372	FCP560
D373	FCP598
D378	FCP173
D382	FCP408
D394	FCP779
D395	FCP256
D396	FCP578
D396	FCP850
D401	FCP342
D403	FCP584
D409	FCP748
D423	FCP415
D427	FCP586
D430	FCP691
D439	FCP1133
D44	FCP809
D447	FCP560
D449	FCP600
D45	FCP11
D453	FCP881
D454	FCP546
D460	FCP986
D461	FCP1372
D462	FCP600
D464	FCP638
D465	FCP761
D470	FCP789
D471	FCP790
D473	FCP487
D485	FCP600
D491	FCP878
D493	FCP1133
D5	FCP825
D503	FCP905
D51	FCP810
D516	FCP558
D52	FRP3057
D525	FCP653
D526	FCP1430
D530	FCP765
D54	FCP29
D547	FCP856
D548	FCP857
D555	FCP590
D558	FCP725
D562	FCP867
D563	FCP948
D568	FCP777
D569	FCP392
D590	FCP565
D592	FCP721
D592	FCP1348
D594	FCP891
D606	FCP1457
D608	FCP451
D608	FCP541

FERODO RACING

Updated on November 2020

BRAKE PADS X-REF COMPETITORS TO FERODO

FMSI	Ferodo
D609	FCP560
D617	FCP1436
D618	FCP1285
D621	FCP776
D635	FCP1011
D636	FCP1012
D639	FCP1298
D647	FCP986
D648	FCP766
D653	FCP1430
D681	FCP997
D682	FCP1001
D683	FCP1483
D684	FCP775
D687	FCP590
D692	FCP850
D692	FCP1301
D695	FCP867
D696	FCP774
D700	FCP600
D721	FCP1327
D723	FCP765
D725	FCP779
D731	FCP1553
D732	FCP1563
D737	FCP1307
D738	FCP1308
D740	FCP1050
D763	FCP850
D764	FCP761
D768	FCP1094
D770	FCP1333
D776	FRP3051
D781	FCP1300
D794	FCP1382
D810	FCP1281
D815	FCP1430
D816	FCP1318
D817	FCP1528
D819	FCP1068
D837	FCP1093
D840	FCP1323
D847	FCP1661
D851	FCP541
D886	FCP1319
D888	FCP1690
D905	FCP1693
D918	FCP1628
D919	FCP1672
D929	FCP1639
D939	FCP1499
D940	FCP1676
D946	FCP1073
D960	FCP1561
D961	FCP448
D961	FCP1562

FMSI	Ferodo
D968	FCP1281
D969	FCP1786
D97	FCP72
D970	FCP1568
D976	FCP1698
D978	FCP1308
D990	FCP1392
D991	FRP3075
DR14	FRP3033
DR19	FRP3060
DR2	FRP501
DR20	FCP308
DR21	FRP3097
DR22	FRP3148
DR23	FRP3071
DR3	FRP503
DR31	FRP3104
DR39	FRP3040
DR4	FRP506
DR53	FRP3029
DR73	FRP3086
DR84	FRP218
DR87	FRP3080

HAWK	Ferodo
HB101	FRP501
HB103 0,59	FRP3057
HB104	FRP506
HB105	FRP3070
HB105 0,62	FRP1077
HB106	FRP3059
HB107	FRP218
HB108	FCP825
HB109 0,71	FRP3003
HB110	FRP216
HB113 0,59	FCP598
HB117	FCP342
HB118 0,56	FCP809
HB119 0,594	FRP3058
HB130	FRP3024
HB135 0,77	FCP779
HB136 0,69	FCP725
HB137 0,69	FCP256
HB141 0,65	FCP560
HB143 0,68	FCP905
HB148	FCP653
HB149 0,505	FCP1011
HB155 0,58	FCP483
HB158 0,515	FCP372
HB159 0,492	FCP1012
HB167	FCP308
HB170 0,65	FCP451
HB171 0,59	FCP11
HB172 0,595	FCP2
HB178 0,564	FCP986
HB179 0,63	FCP1372

HAWK	Ferodo
HB180 0,56	FCP1562
HB180 0,64	FCP116
HB180 0,64	FCP448
HB181 0,66	FCP1298
HB184 .650A	FCP891
HB186	FRP3033
HB189 0,55	FCP392
HB190 .600A	FCP774
HB190 .730A	FCP775
HB191 0,59	FCP308
HB192	FRP219
HB193 0,61	FRP3028
HB193 0,67	FCP1281
HB194	FCP1348
HB194 0,57	FCP721
HB194 0,575	FCP721
HB194 0,665	FCP721
HB195 0,64	FCP1133
HB206 0,565	FCP399
HB208	FRP302
HB208	FRP1077
HB214 0,618	FCP765
HB221	FRP3053
HB224	FRP3059
HB224	FRP3060
HB227 0,63	FCP578
HB227 0,63	FCP850
HB235 0,665	FCP600
HB242 0,661	FCP748
HB245 0,631	FCP1436
HB246 0,567	FCP487
HB247	FCP1553
HB248	FCP1563
HB261 0,665	FCP600
HB262 0,54	FCP638
HB268 0,665	FCP691
HB269 .763A	FCP590
HB271 0,635	FCP541
HB271 0,635	FCP596
HB275 0,62	FCP761
HB278 0,583	FCP878
HB289 0,61	FCP1307
HB290 0,583	FCP1308
HB291 0,642	FRP3051
HB310 0,689	FCP867
HB325 0,72	FCP856
HB328 0,685	FCP1528
HB331	FRP3040
HB332 0,654	FCP1213
HB342	FRP3087
HB346 0,713	FCP1318
HB351	FRP3071
HB352 0,665	FCP1327
HB354 .756A	FCP1323
HB362 0,642	FCP857
HB364 0,642	FCP541

HAWK	Ferodo
HB365 0,728	FCP1094
HB367 0,585	FCP790
HB370 0,559	FCP1693
HB387 0,547	FCP1690
HB388 0,756	FCP1068
HB395 0,58	FCP105
HB399 0,63	FCP296
HB408 0,665	FCP789
HB412 0,665	FCP1430
HB420 0,748	FCP766
HB430 0,547	FCP1319
HB432 0,661	FCP1639
HB434 0,543	FCP1333
HB444 0,685	FCP1499
HB445 0,61	FCP1676
HB448 0,61	FCP1786
HB449 0,679	FCP1568
HB453 0,585	FCP1334
HB453 0,585	FRP3067
HB464 0,764	FCP1073
HB483 0,635	FRP3075
HB484 0,670	FRP3129
HB485 0,656	FRP3130
HB491 0,693	FCP1382
HB492 0,732	FCP1285
HB493 0,65	FCP1392
HB495 0,756	FCP1050
HB497 0,776	FCP997
HB500 0,645	FCP1093
HB518 0,642	FCP1483
HB521	FRP3097
HB533	FCP1984
HB543 0,76	FCP1641
HB544 0,628	FCP1636
HB545 0,564	FCP1561
HB546 0,654	FCP1300
HB557	FCP1947
HB560	FCP4080
HB570 .677	FCP1747
HB574 .666	FCP1806
HB601 .626	FCP4172
HB602 .545	FCP4173
HB603x.616	FCP4218
HB604x.598	FCP4217
HB609 0,572	FCP1664
HB615	FCP4168
HB622	FRP3104
HB624x.642	FCP1808
HB631	FCP5030
HB649	FRP3133
HB668	FCP4426
HB671	FCP4187
HB688	FRP3029
HB699	FRP3153
HB731	FCP4468

LUCAS/TRW	Ferodo
GDB1905	FCP4308

BRAKE PADS X-REF COMPETITORS TO FERODO

LUCAS/TRW	Ferodo
GDB3484	FCP4354

MINTEX	Ferodo
1247	FRP3059
1289	FRP216
1795	FRP501
1968	FCP1348
1981	FRP3029
809	FRP506
CVP020	FCP419
CVP020K	FCP419
CVP043	FCP817
MDB1002	FCP2
MDB1003	FCP11
MDB1008	FCP22
MDB1012	FCP3
MDB1013	FCP29
MDB1065	FCP725
MDB1068	FCP2
MDB1072	FCP93
MDB1074	FCP96
MDB1081	FCP105
MDB1088	FCP360
MDB1099	FCP116
MDB1107	FCP39
MDB1141	FCP173
MDB1155	FCP253
MDB1165	FCP461
MDB1175	FCP206
MDB1190	FCP775
MDB1191	FCP596
MDB1218	FCP351
MDB1230	FCP256
MDB1239	FCP296
MDB1240	FCP370
MDB1251	FCP308
MDB1253	FCP774
MDB1257	FCP370
MDB1258	FCP360
MDB1266	FCP392
MDB1267	FCP419
MDB1273	FCP385
MDB1286	FCP408
MDB1290	FCP276
MDB1291	FCP393
MDB1295	FCP484
MDB1309	FCP409
MDB1309	FCP1113
MDB1312	FCP415
MDB1316	FCP406
MDB1323	FCP399
MDB1327	FCP434
MDB1339	FCP558
MDB1348	FCP487
MDB1351	FCP483
MDB1353	FCP527

MINTEX	Ferodo
MDB1357	FCP441
MDB1360	FCP472
MDB1361	FCP448
MDB1369	FCP578
MDB1371	FCP774
MDB1374	FCP598
MDB1377	FCP1491
MDB1382	FCP541
MDB1384	FCP524
MDB1385	FCP586
MDB1386	FCP584
MDB1391	FCP565
MDB1393	FCP779
MDB1400	FCP602
MDB1401	FCP660
MDB1403	FCP546
MDB1413	FCP653
MDB1416	FCP986
MDB1436	FCP385
MDB1437	FCP415
MDB1445	FCP878
MDB1451	FCP691
MDB1455	FCP11
MDB1456	FCP451
MDB1457	FCP560
MDB1473	FCP660
MDB1483	FCP535
MDB1488	FCP600
MDB1493	FCP617
MDB1496	FCP789
MDB1497	FCP790
MDB1499	FCP9
MDB1503	FCP646
MDB1511	FCP647
MDB1513	FCP519
MDB1518	FCP565
MDB1525	FCP598
MDB1531	FCP590
MDB1533	FCP761
MDB1538	FCP725
MDB1539	FCP765
MDB1543	FCP905
MDB1551	FCP856
MDB1552	FCP857
MDB1556	FCP732
MDB1564	FCP956
MDB1570	FCP774
MDB1571	FCP775
MDB1572	FCP850
MDB1583	FCP660
MDB1589	FCP748
MDB1606	FCP524
MDB1607	FCP170
MDB1610	FCP776
MDB1614	FCP1285
MDB1615	FCP777

MINTEX	Ferodo
MDB1622	FCP766
MDB1623	FCP859
MDB1628	FCP845
MDB1633	FCP721
MDB1637	FCP685
MDB1639	FCP408
MDB1658	FCP867
MDB1659	FCP613
MDB1662	FCP876
MDB1666	FCP925
MDB1676	FCP881
MDB1686	FCP1011
MDB1688	FCP948
MDB1693	FCP1280
MDB1705	FCP1012
MDB1723	FCP809
MDB1727	FCP1093
MDB1732	FCP1063
MDB1734	FCP1056
MDB1735	FCP1052
MDB1736	FCP1049
MDB1742	FCP995
MDB1745	FCP997
MDB1746	FCP1001
MDB1752	FCP1298
MDB1794	FCP1327
MDB1811	FCP1094
MDB1812	FCP1112
MDB1813	FCP1068
MDB1817	FCP1073
MDB1826	FCP1323
MDB1828	FCP1160
MDB1859	FCP1334
MDB1860	FCP891
MDB1868	FCP1312
MDB1871	FCP1050
MDB1872	FCP1288
MDB1873	FCP1307
MDB1874	FCP1308
MDB1876	FCP1113
MDB1877	FCP721
MDB1883	FCP1081
MDB1884	FCP1082
MDB1888	FCP1301
MDB1891	FCP1560
MDB1893	FCP1012
MDB1901	FCP1300
MDB1907	FCP1295
MDB1908	FCP1293
MDB1910	FCP1501
MDB1919	FCP1289
MDB1934	FCP1134
MDB1935	FCP483
MDB1944	FCP1382
MDB1950	FCP1334
MDB1956	FCP1160

MINTEX	Ferodo
MDB1958	FCP1318
MDB1959	FCP1319
MDB1962	FCP360
MDB1968	FCP1348
MDB1972	FCP613
MDB1984	FCP1285
MDB1999	FCP1333
MDB2003	FCP1459
MDB2004	FCP1483
MDB2006	FCP1368
MDB2012	FCP1370
MDB2013	FCP1528
MDB2029	FCP1392
MDB2033	FCP1162
MDB2034	FCP1094
MDB2039	FRP3050
MDB2042	FCP1324
MDB2044	FCP1444
MDB2051	FCP1349
MDB2064	FCP1661
MDB2068	FCP1052
MDB2073	FCP1424
MDB2076	FCP1376
MDB2110	FCP1081
MDB2130	FCP1294
MDB2131	FCP1378
MDB2132	FCP1134
MDB2162	FCP1499
MDB2191	FCP472
MDB2206	FCP1160
MDB2210	FCP1540
MDB2213	FCP1553
MDB2214	FCP1563
MDB2221	FCP1348
MDB2223	FCP1521
MDB2224	FCP1441
MDB2225	FCP1441
MDB2231	FCP1717
MDB2238	FCP1469
MDB2239	FCP1466
MDB2240	FCP1467
MDB2241	FCP1468
MDB2247	FCP1690
MDB2254	FCP1543
MDB2256	FCP1491
MDB2257	FCP1573
MDB2261	FCP1693
MDB2262	FCP1520
MDB2274	FCP1639
MDB2281	FCP1540
MDB2283 (Ex 2183)	FCP1399
MDB2291	FCP1528
MDB2294	FCP1419
MDB2309	FCP372
MDB2314	FCP1394
MDB2341	FCP1561

FERODO RACING

Updated on November 2020

BRAKE PADS X-REF COMPETITORS TO FERODO

MINTEX	Ferodo
MDB2342	FCP1562
MDB2351	FCP600
MDB2352	FCP638
MDB2387	FCP1786
MDB2417	FRP3051
MDB2418	FCP1628
MDB2419	FCP1672
MDB2544	FCP1655
MDB2555	FCP558
MDB2562	FCP1372
MDB2576	FCP1631
MDB2580	FCP1636
MDB2592	FRP3067
MDB2595	FCP1617
MDB2598	FCP1661
MDB2601	FCP1664
MDB2604	FCP1641
MDB2624	FCP1795
MDB2628	FCP1399
MDB2633	FCP1640
MDB2639	FCP1676
MDB2644	FCP1466
MDB2677	FCP1765
MDB2681	FCP1806
MDB2682	FCP1747
MDB2683	FCP1807
MDB2684	FCP1751
MDB2686	FCP1931
MDB2692	FCP1773
MDB2694	FCP1629
MDB2697	FCP1954
MDB2701	FCP1725
MDB2704	FCP1984
MDB2717	FCP1808
MDB2720	FCP1783
MDB2725	FCP1667
MDB2732	FCP1947
MDB2743	FCP1790
MDB2749	FCP1706
MDB2750	FCP1625
MDB2751	FCP1626
MDB2758	FCP370
MDB2763	FCP1301
MDB2765	FCP1672
MDB2770	FCP1862
MDB2779	FCP1858
MDB2789	FCP1631
MDB2790	FCP1805
MDB2791	FCP1859
MDB2816	FCP4080
MDB2828	FCP4217
MDB2833	FCP4064
MDB2842	FRP3051
MDB2847	FCP1430
MDB2868	FCP558
MDB2875	FCP4426

MINTEX	Ferodo
MDB2887	FCP1917
MDB2929	FCP4050
MDB2930	FCP1975
MDB2934	FCP4044
MDB2937	FRP3143
MDB2952	FCP4045
MDB2960	FCP4191
MDB2967	FCP1430
MDB2972	FCP4316
MDB2974	FCP4218
MDB2975	FCP4713
MDB3006	FCP4187
MDB3007	FCP1773
MDB3033	FRP3075
MDB3044	FCP4249
MDB3050	FCP4173
MDB3086	FCP1655
MDB3092	FCP4191
MDB3100	FCP4697
MDB3101	FCP4697
MDB3114	FCP4354
MDB3125	FCP1795
MDB3131	FCP1806
MDB3150	FCP1931
MDB3168	FCP4430
MDB3173	FCP4425
MDB3193	FCP1466
MDB3208	FCP4353
MDB3233	FCP4353
MDB3243	FCP4955
MDB3269	FCP4663
MDB3315	FCP4587
MDB3322	FCP4612
MDB3340	FCP4433
MDB3364	FCP4416
MDB3869	FCP5055
MDB3894	FCP4381
MGB521	FCP815
MGB522	FCP9
MGB533	FCP809
MGB535	FCP810
MGB585	FCP817
MGB633	FCP167
MLB10	FCP823
MLB19	FCP342
MLB20	FCP825
MLB52	FCP832
MLB65	FCP840
MTX1594	FRP3057
MTX1595	FRP3058
MTX1890	FCP448
MTX1976	FCP1281

OE - KIA	Ferodo
58101G6A30	FCP5037
58101G6A40	FCP5037

OE ALFA ROMEO	Ferodo
71770092	FCP4308
77365357	FCP4308

OE AUDI	Ferodo
5Q0698451	FCP4434
8E0698451D	FCP1491
8E0698451E	FCP1491
8E0698451L	FCP541
8J0698151A	FCP4223
8J0698151F	FCP4223
8K0698151 / B	FCP4044
8K0698151A	FCP4045
8K0698451	FCP4050
8K0698451A	FCP4050
8V0698151	FCP4433
8V0698151B	FCP4433
8V0698451	FCP4434

OE BMW	Ferodo
34 11 6 850 568	FCP4489
34 216 784808	FCP4217
34 216 791421	FCP4217
34106799805	FCP4611
34106860020	FCP4872
34112284369	FCP4712
34116786044	FCP4218
34116850850	FCP4611
34116857968	FCP4611
34116859066	FCP4611
34116859282	FCP4611
34116872750	FCP5055
34116874430	FCP5055
34116880734	FCP5055
34116880735	FCP5055
34116888457	FCP5055
34116888458	FCP5055
34116889570	FCP5055
34216855474	FCP4663

OE FORD	Ferodo
1809458	FCP1931
2003984	FCP4830

OE HONDA	Ferodo
43022TBAA02	FCP5086
43022TGHA01	FCP5086
43022TGNG02	FCP5086

OE HYUNDAI	Ferodo
58101-G4A00	FCP5099
58101-G4A10	FCP5099

OE LEXUS	Ferodo
0446548150	FCP4354
0446548160	FCP4354
0446548190	FCP4354

OE MAZDA	Ferodo
NAY03323ZA	FCP653

OE MERCEDES	Ferodo
0044207520	FCP4412
0064203520	FCP4587
0064206320	FCP4587
1644201020	FCP4413
1644202420	FCP4413

OE Mitsubishi	Ferodo
4605A492	FCP765

OE PORSCHE	Ferodo
955.351.939.00 / .01 / .02	FCP1625
97035194905	FCP4713
97035294902	FCP4713
97035294904	FCP4713
97035294905	FCP4713
99135194902	FCP4955
99135294803	FCP4713
99135294881	FCP4665

OE Renault	Ferodo
410605055R	FCP4249
440600364R	FCP1491
440600678R	FCP541
440602070R	FCP1491
440607960R	FCP1491
440608746R	FCP4249
6025371650	FCP1491
7701206599	FCP1441

Oe Suzuki	Ferodo
5581057K01	FRP3118

OE TOYOTA	Ferodo
04465-WAA01	FCP5055

OE VOLKSWAGEN	Ferodo
1K0698451J	FCP1491
5Q0698451	FCP4434
7L0698151 / B / D / H	FCP1625
7L6698151 / C	FCP1625
8J0698151F	FCP4223
8P0698151	FCP4223
8V0698451	FCP4434
8X0698151	FCP1641

P.MU	Ferodo
F1103	FRP3148

PAGID	Ferodo
1141	FCP296
1144	FCP256
1158	FCP541
1158	FCP1491

BRAKE PADS X-REF COMPETITORS TO FERODO

PAGID	Ferodo
1163	FCP408
1177	FCP586
1177	FCP586
1190	FCP415
1192	FRP101
1203	FCP451
1204	FCP560
1218	FRP3059
1265	FRP201
1267	FRP217
1269	FRP203
1270	FRP212
1283	FRP308
1285	FCP578
1287	FCP1281
1288	FCP584
1295	FCP779
1349	FCP789
1361	FRP216
1362	FCP342
1363	FCP825
1406	FCP986
1408	FCP1348
1427	FCP1298
1538	FRP3061
1539	FRP3014
1544	FCP660
1587	FCP1562
1591	FCP765
1594USA	FRP3057
1595	FRP1077
1595USA	FRP3058
1596	FCP748
1607	FRP302
1609	FCP393
1610	FCP558
1616	FRP3140
1616	FRP3140
1617	FRP3140
1617	FRP3140
1618	FRP3030
1618	FRP3030
1619	FRP3029
1620	FCP876
1674	FRP1078
1675	FCP685
1678	FCP590
1682	FCP878
1682	FCP1560
1702	FCP565
1703	FCP360
1705	FRP1079
1736	FCP4050
1743	FCP774
1744	FCP775
1748	FCP4044

PAGID	Ferodo
1749	FRP218
1756	FRP3012
1760	FCP546
1760	FCP4045
1796	FRP502
1798USA	FRP503
1809USA	FRP506
1813	FRP1060
1842	FCP891
1852	FRP3000
1896	FRP3024
1897	FCP1283
1903	FRP3054
1904	FRP3003
1904	FRP3144
1908	FRP3042
1976	FCP4697
1977	FCP4697
2016	FRP3040
2017	FRP3046
2019	FRP3131
2019	FRP3150
20345	FRP3083
20346	FRP3084
20349	FRP3085
2053	FRP1064
2105	FRP1059
2126	FRP3018
2127	FRP219
2130	FCP385
2141	FRP1061
2180	FCP725
2180	FCP1300
2205	FRP3097
2275	FCP1068
2388	FCP1133
2405	FRP3051
2406	FCP1308
2407	FCP1307
2445	FCP1280
2474	FRP3050
2487	FCP1334
2488	FRP3031
2555	FRP501
2557	FRP3037
2558	FRP3055
2559	FRP3055
2560	FRP3155
2581USA	FRP3148
2593	FCP1562
2623	FCP905
2683	FCP856
2683	FCP997
2685	FCP857
2685	FCP1483
2688	FRP3039

PAGID	Ferodo
2703	FRP3042
2704	FRP3156
2707	FRP3075
2723	FCP2
2743	FRP3009
2830	FCP1001
2845	FCP1626
2931	FCP1664
2959	FCP1499
3102	FCP809
3190	FCP810
3242	FCP596
3276	FCP845
4011	FCP392
4122	FCP3
4304	FCP2
4345	FRP3083
4346	FRP3084
4346	FRP3084
4349	FRP3085
4501	FCP11
4503	FCP11
4507	FCP116
4823	FCP206
4905	FCP167
4907	FCP4467
4909	FCP4713
4917	FCP4064
4922	FCP4955
4924	FCP4664
4925	FCP4665
4928	FRP3151
4929	FRP3152
4932	FCP4381
4933	FCP4663
4934	FCP4712
4936	FCP4316
4940	FCP1858
8000	FRP3071
8001	FCP1641
8003	FRP3075
8004	FRP3096
8005	FRP3100
8006	FRP3095
8008	FRP3143
8009	FRP3069
8010	FCP598
8018	FRP3076
8021	FCP1672
8023	FCP1667
8029	FCP1392
8030	FRP3087
8032	FRP5002
8033	FRP3088
8034	FRP3092
8035	FCP850

PAGID	Ferodo
8038	FRP3123
8039	FCP1655
8040	FRP202
8041	FCP815
8042	FCP9
8043	FRP3141
8046	FCP1636
8049	FRP3103
8050	FRP3082
8051	FCP1808
8053	FCP4191
8060	FRP3102
8061	FRP3099
8062	FRP3098
8064	FCP1629
8067	FCP461
8068	FCP840
8074	FCP4805
8076	FCP4972
8077	FCP1894
8078	FRP3117
8081	FRP3106
8081	FRP3133
8085	FCP4217
8087	FRP3110
8096	FCP4044
8100	FRP3153
8101	FRP3128
8113	FRP3130
8127	FCP1011
8129	FCP1012
8174	FCP1639
8175	FCP4187
8185	FCP1521
8188	FCP4806
8201	FCP4425
8208	FRP3137
8212	FCP1399
8214	FRP3115
8222	FRP3039
8235	FCP4664
8236	FRP3051
8240	FRP3094
8240front	FRP3094
8240rear	FRP3094
8245	FRP3014
8250	FRP3015
ERS496	FCP9
ERS651	FCP1327
T1231	FRP3051
T1291	FRP3050
T1350	FCP4223
T1376	FCP1641
T1620	FCP4217
T1635	FRP3051
T1685	FCP1563

FERODO RACING

Updated on November 2020

BRAKE PADS X-REF COMPETITORS TO FERODO

PAGID	Ferodo
T1698	FCP1308
T1735	FCP4413
T1752	FRP3143
T1753	FCP4805
T1784	FCP4218
T1785	FCP4713
T1799	FRP3051
T1830	FRP3067
T1857	FRP3075
T1976	FCP4434
T1997	FCP4354
T2011	FCP4308
T2056	FCP4064
T2102	FCP4806
T2150	FCP4955
T2151	FCP4587
T2214	FCP4587
T2239	FCP4433
T2309	FCP4713
T2419	FCP4806
T2423	FCP4663
T2424	FCP5108
T2440	FCP4611
T2444	FCP1641
T2454	FCP1636
T2585	FCP5086
T5075	FCP1491
T5124	FCP1307
T5125	FCP1308

PFC	Ferodo
0031.XX	FCP2
0044	FCP809
0045.XX	FCP11
0051	FCP810
0052.XX	FRP3057
0109	FCP1562
0109-07-16-44	FRP3056
0109.XX	FCP116
0154.XX	FRP3058
0163.XX	FCP399
0174.XX	FCP116
0174.XX	FCP448
0195	FCP170
0242.XX	FCP308
0253.XX	FCP256
0272	FCP484
0278.XX	FCP1133
0280.XX	FCP392
0292	FCP845
0340-07-15-44	FCP1491
0345.XX	FCP451
0350	FCP206
0356.XX	FCP308
0369.XX	FCP1213
0373.XX	FCP598

PFC	Ferodo
0382	FCP408
0394	FCP685
0394	FCP1773
0394.XX	FCP779
0395.XX	FCP256
0396	FCP1807
0396.XX	FCP578
0396.XX	FCP850
0409.XX	FCP748
0447	FCP560
0460	FCP986
0460.XX	FCP986
0461	FCP1372
0461.XX	FCP1372
0463	FCP483
0465.XX	FCP761
0473.XX	FCP487
0491	FCP878
0503.XX	FCP905
0526.XX	FCP1430
0530.XX	FCP765
0537	FCP956
0548	FCP1483
0558	FCP725
0558.XX	FCP725
0562.XX	FCP867
0590	FCP565
0592.XX.15	FCP1348
0592.XX.17	FCP721
0594.XX.18	FCP891
0617.XX	FCP1436
0621	FCP776
0639	FCP1298
0639	FCP1561
0648.XX	FCP766
0682.XX	FCP997
0731	FCP1553
0732	FCP1563
0738	FCP1307
0738	FCP1308
0776	FRP3051
0815.XX	FCP1430
0816.XX	FCP1318
0829	FCP1444
7683	FRP3025
7700.XX.16	FRP1077
7700.XX.18	FRP3007
7700.XX.20	FRP302
7700.XX.25	FRP1078
7702	FRP3059
7708	FRP1061
7710	FRP101
7712	FRP3060
7714	FRP217
7718.XX.16	FRP3032
7718.XX.18	FRP3070

PFC	Ferodo
7719	FCP342
7720	FCP825
7735.XX.16	FRP1079
7735.XX.20	FRP308
7736	FRP3071
7740	FRP218
7742.XX.18	FRP3045
7742.XX.20	FRP3004
7742.XX.21	FRP3034
7742.XX.22	FRP1059
7743.XX.17	FRP3023
7743.XX.20	FRP3022
7743.XX.21	FRP3033
7745	FRP219
7746	FRP3074
7748.XX.18	FRP1058
7748.XX.20	FRP1064
7750.XX.20	FRP3074
7751	FRP501
7752	FRP502
7754	FRP504
7755	FRP3009
7756	FRP3012
7757	FRP506
7760	FCP685
7765	FCP840
7767	FRP212
7767	FRP216
7767.XX.20	FRP212
7768.XX.16	FRP3018
7768.XX.20	FRP3073
7770.XX.17	FRP3087
7770.XX.20	FRP3024
7770.XX.26	FRP3029
7770.XX.26	FRP3030
7772.XX.18	FRP3088
7773.XX.30	FRP3040
7775.XX.28	FRP3053
7778.XX.25	FRP3039
7778.XX.28	FRP3037
7778.XX.30	FRP3055
7780.XX.16	FRP3028
7780.XX.18	FCP1281
7781	FCP1334
7781	FRP3067
7790.XX.17	FRP3077
7790.XX.18	FRP3003
7790.XX.25	FRP3014
7790.XX.25	FRP3061
7790.XX.28	FRP3015
7793.XX.18	FRP3054
7797.XX.29	FRP3031
7802.XX.18	FRP3045
7802.XX.20	FRP3004
7802.XX.22	FRP1059
7804.XX.15	FRP3020

PFC	Ferodo
7804.XX.18	FRP3086
7818.XX.17	FRP3050
7819	FRP3075
7871-07-16-44	FCP1667

Raybestos	Ferodo
DR1001	FRP3067
DR1017	FCP541
DR1029	FCP1664
DR1291	FCP4468
DR1368	FCP4168
DR1382	FRP3106
DR1389	FCP4805
DR154	FRP3058
DR1740	FCP4665
DR1741	FCP4664
DR20	FRP506
DR200	FRP503
DR2000 0.63	FRP1077
DR2000 0.78	FRP302
DR2000 0.98	FRP1078
DR2001	FRP3070
DR25	FRP3104
DR2600 0.71	FRP3003
DR2600 0.98	FRP3014
DR303	FRP3148
DR304	FCP825
DR394	FCP779
DR400	FCP825
DR401	FCP342
DR44	FCP809
DR45	FCP11
DR491	FCP878
DR500	FRP3059
DR501	FRP3060
DR52	FRP3057
DR525	FCP653
DR561	FRP3053
DR562	FRP3087
DR592	FCP1348
DR593	FCP1667
DR600	FRP3040
DR605	FRP3080
DR608	FCP451
DR609	FCP560
DR635	FCP1011
DR639	FCP1298
DR700	FRP501
DR701	FRP3097
DR731	FCP1553
DR732	FCP1563
DR735	FCP308
DR736	FRP3071
DR767	FRP216
DR770	FCP1281
DR780	FCP1281

BRAKE PADS X-REF COMPETITORS TO FERODO

Raybestos	Ferodo
DR801	FRP3033
DR804	FRP219
DR805	FRP218
DR806	FRP3086
DR809	FRP3029
DR961	FCP448

SBS	Ferodo
3019	FCP1553
3021	FCP1563
3030	FRP3058
3034	FCP878
3038	FCP1281
3041	FCP451
3045	FCP560
3059	FRP219

TAROX	Ferodo
SP0239	FRP3078

TEXTAR	Ferodo
20594	FCP253

TRW	Ferodo
GDB1809	FCP4223
GDB1957	FCP4434

Wilwood	Ferodo
15E-9837K	FRP3149
5214	FCP825
5222	FCP825
5310	FCP342
5518	FCP1281
5616	FRP218
5916	FRP3029
6812	FRP3104
7012	FRP506
7320	FRP501
7416	FRP3154
7420	FRP3097
7812	FRP3149
7816	FRP3148
7912	FRP3108
8430	FRP3040
8517	FRP216
8716	FRP219
8818	FRP3003
8825	FRP3014
8828	FRP3015
9216	FRP1077
9220	FRP302
9425	FRP3059
9428	FRP3059
9525	FRP3060
9528	FRP3060
9720	FRP3024

Wilwood	Ferodo
9725	FRP3029
9728	FRP3030
9828	FRP3053
D154	FRP3058
D44	FCP809
D491	FCP878
D592	FCP1348
D639	FCP1298
D731	FCP1553
D732	FCP1563

WVA	Ferodo
20007 15,30	FCP815
20009 15,00	FCP3
20011 15,00	FCP11
20027 16,00	FCP9
20034	FCP2
20037 15,00	FCP823
20046 15,30	FCP1459
20053 10,00	FCP342
20054 14,50	FCP825
20073 17,50	FCP29
20088 14,40	FCP809
20089 14,40	FCP810
20128 14,70	FCP39
20140 14,00	FCP72
20166 16,00	FCP96
20168 16,20	FCP774
20168 19,60	FCP775
20180 16,80	FCP850
20228 15,20	FCP105
20323 16,50	FCP116
20323 16,50	FCP448
20328 12,90	FCP372
20380 15,50	FCP817
20410 12,90	FCP1560
20410 14,80	FCP878
20476 15,00	FCP170
20491 15,20	FCP167
20547 16,80	FCP732
20561 15,00	FCP461
20577 15,00	FCP832
20629 20,00	FCP256
20634 15,00	FCP881
20640-20753 18,60	FCP206
20641 15,00	FCP93
20675 17,00	FCP296
20676 19,50 - 21624&21625 19,50	FCP590
20676 20,10	FCP1717
20754 15,00	FCP840
20775 18,20	FCP351
20833 17,00	FCP370
20841 12,00	FCP360
20870 15,00	FCP308
20877 17,50	FCP451
20878 14,80	FCP483

WVA	Ferodo
20887 15,30	FCP392
20887 19,70	FCP419
20889 17,30	FCP385
20905 18,00	FCP393
20907 18,00	FCP276
20923 17,50	FCP434
20939 15,90	FCP173
20941 19,30	FCP415
20953 17,50	FCP560
20961 15,20	FCP541
20961 16,00	FCP1491
20968 20,30	FCP779
20973 11,00	FCP558
20995 17,30	FCP578
21074 19,00	FCP565
21079 13,75	FCP408
21088 17,00	FCP399
21098 16,00	FCP441
21100 17,00	FCP524
21103 14,50	FCP409
21121 13,80	FCP484
21140 15,70	FCP586
21144 16,50	FCP596
21153 17,50	FCP646
21165 16,50	FCP546
21170 17,30	FCP527
21171 19,00	FCP617
21173 17,00	FCP660
21179 16,80	FCP535
21190 17,50	FCP584
21193 18,00	FCP519
21201-21190 17,50	FCP584
21271 17,00	FCP647
21273 19,50	FCP1285
21277 15,00	FCP487
21282 17,20	FCP1483
21282 17,30	FCP857
21284 19,30	FCP856
21292 17,30	FCP725
21294 15,00	FCP602
21307 14,50	FCP986
21312 12,80	FCP472
21322 15,00	FCP598
21363 15,70	FCP765
21381 15,00	FCP1348
21381 16,80	FCP721
21388 18,50	FCP406
21395 18,00	FCP766
21402 17,50	FCP891
21430 17,30	FCP876
21436 17,00	FCP925
21437 17,00	FCP925
21446 17,80	FCP748
21463 18,00	FCP845
21468 15,50	FRP3127
21482 16,70	FCP948

WVA	Ferodo
21484 20,00	FCP1001
21495 17,00	FCP789
21515 17,50	FCP613
21526 17,00	FCP600
21552 14,00	FCP653
21553 14,00	FCP638
21560 18,00	FCP685
21561 17,00	FCP691
21580 14,30	FCP1562
21589 15,00	FCP726
21601 17,50	FCP867
21606 16,20	FCP995
21626 15,00	FCP859
21636 18,00	FCP1052
21651 18,50	FCP905
21664 19,00	FCP1049
21670 19,50	FCP1050
21674 18,00	FCP1063
21677 19,50	FCP1073
21694 16,50	FCP776
21697 15,80	FCP777
21703 14,80	FCP790
21719 14,50	FCP956
21829 19,50	FCP1068
21866 15,30	FCP1288
21920 15,60	FCP1093
21925 17,80	FCP1300
21927 17,00	FCP1056
21931 17,00	FCP1160
21934 17,30	FCP1301
21937 16,20	FCP1307
21938 20,40	FCP1323
21945 16,00	FCP1312
21945 19,90	FCP1289
21947	FCP1021
21972 15,20	FCP1308
21974 19,40	FCP1094
21998 15,60	FCP1162
22271	FCP4873
22344	FCP4872
22425	FCP5055
22429, 22430	FCP5086
22569-22570-22571	FCP4830
22904, 22905, 22906	FCP5037
23052 16,20	FCP1294
23057 20,00	FCP1295
23063 18,40	FCP1293
23073 18,80	FCP1382
23092 15,00	FRP3067
23092 16,00	FCP1334
23101 18,00	FCP1082
23103-23104 18,00	FCP1081
23124 19,00	FCP1112
23139 17,00	FRP3050
23140 19,30	FCP1134
23142 15,00	FCP1561

FERODO RACING

Updated on November 2020

BRAKE PADS X-REF COMPETITORS TO FERODO

WVA	Ferodo
23154 19,00	FCP1318
23177 14,30	FCP1113
23178 18,00	FCP1444
23202 18,50	FCP1394
23225 17,00	FCP1424
23245	FCP1441
23281 18,00	FCP1499
23309 17,00	FCP1672
23312 20,30	FCP1628
23313 20,30 - 24255 20,30	FCP4191
23326	FCP1655
23329	FRP3051
23332 18,00	FCP1370
23348 16,50	FCP1368
23353 14,70	FCP1319
23354 13,00	FCP1011
23387 12,50	FCP1012
23402 20,10 - 23403 20,10	FCP1520
23409 19,30	FCP1543
23417 15,20	FCP1521
23482 16,50	FCP1540
23497 15,40	FCP1501
23510 16,50	FCP1392
23517 16,60	FCP1349
23524	FCP1456
23526 17,40	FCP1528
23539	FCP1457
23550 17,00	FCP1808
23552 17,80	FCP1376
23558 17,80	FCP1327
23566 17,20	FCP1436
23572 14,40	FCP1333
23581 18,70	FCP1419
23587 20,30	FCP1641
23597 16,80	FCP1378
23601 16,70	FCP1324
23623 17,20	FCP1806
23692	FCP1625
23693 16,20	FCP1626
23694	FCP1308
23705 17,10 - 24288 17,70&17,90	FCP1466
23708 18,40	FCP1467
23711 18,40	FCP1468
23714 15,80	FCP1469
23716 16,40	FCP1676
23745 - 23271 17,70	FCP1661
23760 17,50	FCP1795
23764 17,00	FCP1664
23766 17,50	FCP1573
23794 19,80	FCP1773
23801	FCP4223
23832 20,40	FCP1640
23855 16,00	FRP3120
23871 14,00	FCP1693
23912 18,50 - 23801 18,50	FCP1706
23912 20,20 - 23801 20,2	FCP1629

WVA	Ferodo
23912 20,20 - 23801 20,2	FCP1765
23914 16,90	FCP1636
23915 17,60 - 23916 17,60	FCP1747
23926 17,00	FCP1807
23935 17,60	FCP1751
23954 19,00 (Ex 23599)	FCP1399
23959 17,40	FCP1790
23973 16,80	FCP1617
23984 17,90	FCP4080
24024	FCP1698
24086 15,50	FCP1862
24137 16,30	FCP1931
24142 20,60 - 24141 19,10	FCP1631
24180, 24181	FCP4413
24194 15,3	FCP1553
24197	FCP1563
24205	FCP4412
24222 17,90	FCP1984
24271 14,60	FCP1947
24283	FCP4426
24289 17,10 - 24290 17,10	FCP1975
24298	FCP1894
24315 17,10	FCP4217
24316 17,00	FCP4218
24339 19,90	FCP1805
24349 17,20	FCP1858
24408 19,40	FCP4044
24409 19,40	FCP4044
24455 16,90	FRP3133
24513	FRP3129
24552 16,10	FCP4064
24554, 25691	FCP4713
24606 17,50	FCP4050
24659	FCP4379
24680	FCP4327
24703	FCP4381
24705 20,00	FCP4045
24706 20,00	FCP4045
24707 20,00	FCP4045
24709 18,00 - 24710 18,00	FCP4249
24738 19,8	FCP4425
24743 19,40	FCP4044
24764 17,00	FCP1667
24847	FCP4468
24851 15,60	FRP3135
24854 16,70	FCP4187
24912-24913	FCP4489
24920 15,60	FCP4172
24956 15,50	FCP1786
24974 16,70 - 20345 16,90	FRP3083
24979	FCP4404
25003	FCP4955
25007	FCP4064
25008, 25010	FCP4434
25009 - 25011	FCP4697
25028 18,30	FCP4611

WVA	Ferodo
25029 17,80	FCP4663
25031	FCP4262
25086 20,20 or 25683-25684 20,30	FCP4433
25134 16,70	FCP4612
25156, 25157	FCP4308
25163, 25164	FCP5108
25199	FCP4394
25216, 25215	FCP4587
25219	FCP4806
25258	FCP4430
25594 15,9	FRP3115
25737 17,40 - 25736 17,40	FCP4416

ECAT

FERODO®
RACING

FEDERAL-MOGUL ITALY Srl
Racing & Motorcycle Division

Corso Inghilterra, 2
12084 Mondovì (CN) ITALY

www.ferodoracing.com

